INTERVALVES TECHNOLOGIES AG

PREMIUM ENGINE PARTS

2018/01

VALVE GUIDES

Intervalves Technologies AG
Via Industria 20
6710 Biasca
SWITZERLAND
Tel. +41 91 862 41 87
Fax +41 91 862 22 06
info@intervalves-technologies.com
www.intervalves-technologies.com

VALVE GUIDE DESCRIPTION

SHAPE DESIGN

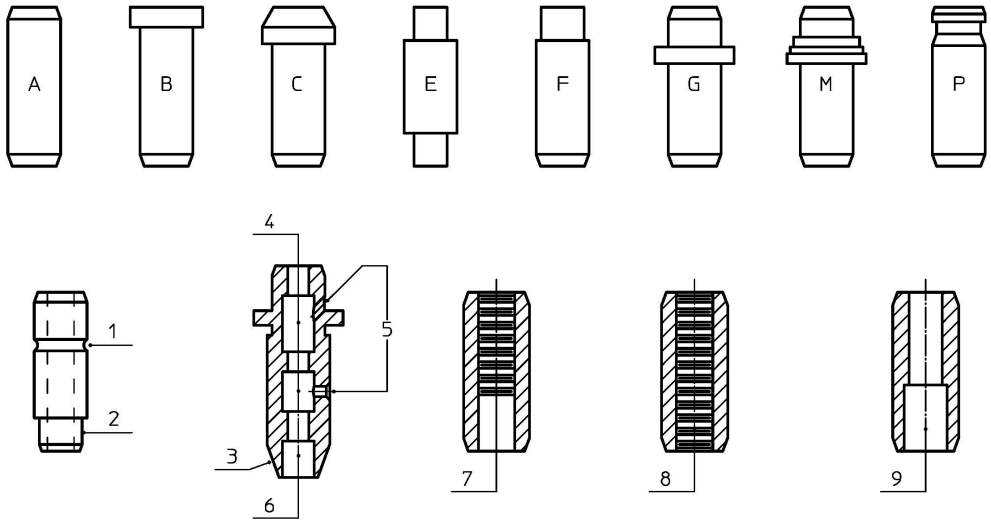

TABLE OF MATERIALS

G	Pearlitic grey iron
G1	Pearlitic grey iron with added phosphorus
G2	Grey cast iron with pearlitic laminar matrix, combined with phosphorus and chromium
B	Bronze alloy
B1	Phosphor-bronze alloy
Cu	Alloy with high hardness and thermal conductivity and high resistance to wear and abrasion
S01	Copper/molybdenum alloy
S02	Tin/Phosphorus alloy
S03	Copper/Sulphur alloy

INTERVALVES TECHNOLOGIES AG PREMIUM ENGINE PARTS

VALVE GUIDES

IVT Ref.	Type	Model	Engine	OEM Ref.	D1	D2	Length	B	C
ALFA ROMEO									
8102.600	IN	145 1.6 16V TS	AR 32102	60811087	7.0	13.03	42.5	F	G1
8105.600	EX	145 1.6 16V TS	AR 32102	60811090	7.0	13.03	46.0	F	G1
8105.600	EX	145 1.6 16V TS	AR 32102	60811091	7.0	13.03	46.0	F	G1
8102.600	IN	145 1.6 16V TS	AR 32102	7756897	7.0	13.03	42.5	F	G1
8102.600	IN	145 1.6 16V TS	AR 32102	7757053	7.0	13.03	42.5	F	G1
8105.600	EX	145 1.6 16V TS	AR 32102	7779402	7.0	13.03	46.0	F	G1
8102.600	IN	145 1.6 ie 16V TS	AR 67601	60811087	7.0	13.03	42.5	F	G1
8105.600	EX	145 1.6 ie 16V TS	AR 67601	60811090	7.0	13.03	46.0	F	G1
8105.600	EX	145 1.6 ie 16V TS	AR 67601	60811091	7.0	13.03	46.0	F	G1
8102.600	IN	145 1.6 ie 16V TS	AR 67601	7756897	7.0	13.03	42.5	F	G1
8102.600	IN	145 1.6 ie 16V TS	AR 67601	7757053	7.0	13.03	42.5	F	G1
8105.600	EX	145 1.6 ie 16V TS	AR 67601	7779402	7.0	13.03	46.0	F	G1
8102.600	IN	145 1.8 ie 16V	AR 32201	60811087	7.0	13.03	42.5	F	G1
8105.600	EX	145 1.8 ie 16V	AR 32201	60811090	7.0	13.03	46.0	F	G1
8105.600	EX	145 1.8 ie 16V	AR 32201	60811091	7.0	13.03	46.0	F	G1
8102.600	IN	145 1.8 ie 16V	AR 32201	7756897	7.0	13.03	42.5	F	G1
8102.600	IN	145 1.8 ie 16V	AR 32201	7757053	7.0	13.03	42.5	F	G1
8105.600	EX	145 1.8 ie 16V	AR 32201	7779402	7.0	13.03	46.0	F	G1
8102.600	IN	145 1.8 ie 16V TS	AR 67106	60811087	7.0	13.03	42.5	F	G1
8105.600	EX	145 1.8 ie 16V TS	AR 67106	60811090	7.0	13.03	46.0	F	G1
8105.600	EX	145 1.8 ie 16V TS	AR 67106	60811091	7.0	13.03	46.0	F	G1
8102.600	IN	145 1.8 ie 16V TS	AR 67106	7756897	7.0	13.03	42.5	F	G1
8102.600	IN	145 1.8 ie 16V TS	AR 67106	7757053	7.0	13.03	42.5	F	G1
8105.600	EX	145 1.8 ie 16V TS	AR 67106	7779402	7.0	13.03	46.0	F	G1
8102.600	IN	145 2.0 16V Quadrifoglio	AR 32301	60811087	7.0	13.03	42.5	F	G1
8105.600	EX	145 2.0 16V Quadrifoglio	AR 32301	60811090	7.0	13.03	46.0	F	G1
8105.600	EX	145 2.0 16V Quadrifoglio	AR 32301	60811091	7.0	13.03	46.0	F	G1
8102.600	IN	145 2.0 16V Quadrifoglio	AR 32301	7756897	7.0	13.03	42.5	F	G1
8102.600	IN	145 2.0 16V Quadrifoglio	AR 32301	7757053	7.0	13.03	42.5	F	G1
8105.600	EX	145 2.0 16V Quadrifoglio	AR 32301	7779402	7.0	13.03	46.0	F	G1
8102.600	IN	145 2.0 16V TS	AR 67204	60811087	7.0	13.03	42.5	F	G1
8105.600	EX	145 2.0 16V TS	AR 67204	60811090	7.0	13.03	46.0	F	G1
8105.600	EX	145 2.0 16V TS	AR 67204	60811091	7.0	13.03	46.0	F	G1
8102.600	IN	145 2.0 16V TS	AR 67204	7756897	7.0	13.03	42.5	F	G1
8102.600	IN	145 2.0 16V TS	AR 67204	7757053	7.0	13.03	42.5	F	G1
8105.600	EX	145 2.0 16V TS	AR 67204	7779402	7.0	13.03	46.0	F	G1
8102.600	IN	146 1.6 16V TS	AR 32102	60811087	7.0	13.03	42.5	F	G1
8105.600	EX	146 1.6 16V TS	AR 32102	60811090	7.0	13.03	46.0	F	G1
8105.600	EX	146 1.6 16V TS	AR 32102	60811091	7.0	13.03	46.0	F	G1
8102.600	IN	146 1.6 16V TS	AR 32102	7756897	7.0	13.03	42.5	F	G1
8102.600	IN	146 1.6 16V TS	AR 32102	7757053	7.0	13.03	42.5	F	G1
8105.600	EX	146 1.6 16V TS	AR 32102	7779402	7.0	13.03	46.0	F	G1
8102.600	IN	146 1.6 ie 16V TS	AR 67601	60811087	7.0	13.03	42.5	F	G1
8105.600	EX	146 1.6 ie 16V TS	AR 67601	60811090	7.0	13.03	46.0	F	G1
8105.600	EX	146 1.6 ie 16V TS	AR 67601	60811091	7.0	13.03	46.0	F	G1
8102.600	IN	146 1.6 ie 16V TS	AR 67601	7756897	7.0	13.03	42.5	F	G1
8102.600	IN	146 1.6 ie 16V TS	AR 67601	7757053	7.0	13.03	42.5	F	G1
8105.600	EX	146 1.6 ie 16V TS	AR 67601	7779402	7.0	13.03	46.0	F	G1
8102.600	IN	146 1.8 ie 16V	AR 32201	60811087	7.0	13.03	42.5	F	G1
8105.600	EX	146 1.8 ie 16V	AR 32201	60811090	7.0	13.03	46.0	F	G1
8105.600	EX	146 1.8 ie 16V	AR 32201	60811091	7.0	13.03	46.0	F	G1
8102.600	IN	146 1.8 ie 16V	AR 32201	7756897	7.0	13.03	42.5	F	G1
8102.600	IN	146 1.8 ie 16V	AR 32201	7757053	7.0	13.03	42.5	F	G1
8105.600	EX	146 1.8 ie 16V	AR 32201	7779402	7.0	13.03	46.0	F	G1
8102.600	IN	146 1.8 ie 16V TS	AR 67106	60811087	7.0	13.03	42.5	F	G1
8105.600	EX	146 1.8 ie 16V TS	AR 67106	60811090	7.0	13.03	46.0	F	G1
8105.600	EX	146 1.8 ie 16V TS	AR 67106	60811091	7.0	13.03	46.0	F	G1
8102.600	IN	146 1.8 ie 16V TS	AR 67106	7756897	7.0	13.03	42.5	F	G1
8102.600	IN	146 1.8 ie 16V TS	AR 67106	7757053	7.0	13.03	42.5	F	G1
8105.600	EX	146 1.8 ie 16V TS	AR 67106	7779402	7.0	13.03	46.0	F	G1
8102.600	IN	146 2.0 16V Quadrifoglio	AR 32301	60811087	7.0	13.03	42.5	F	G1
8105.600	EX	146 2.0 16V Quadrifoglio	AR 32301	60811090	7.0	13.03	46.0	F	G1

(D1) Internal diameter, (D2) External diameter, (B) Shape, (C) Material

VALVE GUIDES

ALFA ROMEO

IVT Ref.	Type	Model	Engine	OEM Ref.	D1	D2	Length	B	C
8105.600	EX	146 2.0 16V Quadrifoglio	AR 32301	60811091	7.0	13.03	46.0	F	G1
8102.600	IN	146 2.0 16V Quadrifoglio	AR 32301	7756897	7.0	13.03	42.5	F	G1
8102.600	IN	146 2.0 16V Quadrifoglio	AR 32301	7757053	7.0	13.03	42.5	F	G1
8105.600	EX	146 2.0 16V Quadrifoglio	AR 32301	7779402	7.0	13.03	46.0	F	G1
8102.600	IN	146 2.0 16V TS	AR 67204	60811087	7.0	13.03	42.5	F	G1
8105.600	EX	146 2.0 16V TS	AR 67204	60811090	7.0	13.03	46.0	F	G1
8105.600	EX	146 2.0 16V TS	AR 67204	60811091	7.0	13.03	46.0	F	G1
8102.600	IN	146 2.0 16V TS	AR 67204	7756897	7.0	13.03	42.5	F	G1
8102.600	IN	146 2.0 16V TS	AR 67204	7757053	7.0	13.03	42.5	F	G1
8105.600	EX	146 2.0 16V TS	AR 67204	7779402	7.0	13.03	46.0	F	G1
8186.105	IN-EX	147 (937), 1.9 JTD 16V	192 B1.000	55210016	5.0	10.03	46.7	A	S06
8186.105	IN-EX	147 (937), 1.9 JTDM 16V	937 A5.000	55210016	5.0	10.03	46.7	A	S06
8186.105	IN-EX	147 (937), 1.9 JTDM 16V	937 A6.000	55210016	5.0	10.03	46.7	A	S06
8102.600	IN	147 2.0 16V Twin Spark	AR 32310	60811087	7.0	13.03	42.5	F	G1
8105.600	EX	147 2.0 16V Twin Spark	AR 32310	60811090	7.0	13.03	46.0	F	G1
8105.600	EX	147 2.0 16V Twin Spark	AR 32310	60811091	7.0	13.03	46.0	F	G1
8102.600	IN	147 2.0 16V Twin Spark	AR 32310	7756897	7.0	13.03	42.5	F	G1
8102.600	IN	147 2.0 16V Twin Spark	AR 32310	7757053	7.0	13.03	42.5	F	G1
8105.600	EX	147 2.0 16V Twin Spark	AR 32310	7779402	7.0	13.03	46.0	F	G1
8102.600	IN	155 1.6 16V TS	AR 67601	60811087	7.0	13.03	42.5	F	G1
8105.600	EX	155 1.6 16V TS	AR 67601	60811090	7.0	13.03	46.0	F	G1
8105.600	EX	155 1.6 16V TS	AR 67601	60811091	7.0	13.03	46.0	F	G1
8102.600	IN	155 1.6 16V TS	AR 67601	7756897	7.0	13.03	42.5	F	G1
8102.600	IN	155 1.6 16V TS	AR 67601	7757053	7.0	13.03	42.5	F	G1
8105.600	EX	155 1.6 16V TS	AR 67601	7779402	7.0	13.03	46.0	F	G1
8102.600	IN	155 1.7 16V TS	AR 67106	60811087	7.0	13.03	42.5	F	G1
8105.600	EX	155 1.7 16V TS	AR 67106	60811090	7.0	13.03	46.0	F	G1
8105.600	EX	155 1.7 16V TS	AR 67106	60811091	7.0	13.03	46.0	F	G1
8102.600	IN	155 1.7 16V TS	AR 67106	7756897	7.0	13.03	42.5	F	G1
8102.600	IN	155 1.7 16V TS	AR 67106	7757053	7.0	13.03	42.5	F	G1
8105.600	EX	155 1.7 16V TS	AR 67106	7779402	7.0	13.03	46.0	F	G1
8102.600	IN	155 2.0 16V TS	AR 67204	60811087	7.0	13.03	42.5	F	G1
8105.600	EX	155 2.0 16V TS	AR 67204	60811090	7.0	13.03	46.0	F	G1
8105.600	EX	155 2.0 16V TS	AR 67204	60811091	7.0	13.03	46.0	F	G1
8102.600	IN	155 2.0 16V TS	AR 67204	7756897	7.0	13.03	42.5	F	G1
8102.600	IN	155 2.0 16V TS	AR 67204	7757053	7.0	13.03	42.5	F	G1
8105.600	EX	155 2.0 16V TS	AR 67204	7779402	7.0	13.03	46.0	F	G1
8186.105	IN-EX	156 (932), 1.9 JTD	937 A5.000	55210016	5.0	10.03	46.7	A	S06
8102.600	IN	156 1.6 16V Twin Spark	AR 32102	60811087	7.0	13.03	42.5	F	G1
8105.600	EX	156 1.6 16V Twin Spark	AR 32102	60811090	7.0	13.03	46.0	F	G1
8105.600	EX	156 1.6 16V Twin Spark	AR 32102	60811091	7.0	13.03	46.0	F	G1
8102.600	IN	156 1.6 16V Twin Spark	AR 32102	7756897	7.0	13.03	42.5	F	G1
8102.600	IN	156 1.6 16V Twin Spark	AR 32102	7757053	7.0	13.03	42.5	F	G1
8105.600	EX	156 1.6 16V Twin Spark	AR 32102	7779402	7.0	13.03	46.0	F	G1
8102.600	IN	156 1.6 16V Twin Spark	AR 67601	60811087	7.0	13.03	42.5	F	G1
8105.600	EX	156 1.6 16V Twin Spark	AR 67601	60811090	7.0	13.03	46.0	F	G1
8105.600	EX	156 1.6 16V Twin Spark	AR 67601	60811091	7.0	13.03	46.0	F	G1
8102.600	IN	156 1.6 16V Twin Spark	AR 67601	7756897	7.0	13.03	42.5	F	G1
8102.600	IN	156 1.6 16V Twin Spark	AR 67601	7757053	7.0	13.03	42.5	F	G1
8105.600	EX	156 1.6 16V Twin Spark	AR 67601	7779402	7.0	13.03	46.0	F	G1
8102.600	IN	156 1.8 16V Twin Spark	AR 32201	60811087	7.0	13.03	42.5	F	G1
8105.600	EX	156 1.8 16V Twin Spark	AR 32201	60811090	7.0	13.03	46.0	F	G1
8105.600	EX	156 1.8 16V Twin Spark	AR 32201	60811091	7.0	13.03	46.0	F	G1
8102.600	IN	156 1.8 16V Twin Spark	AR 32201	7756897	7.0	13.03	42.5	F	G1
8102.600	IN	156 1.8 16V Twin Spark	AR 32201	7757053	7.0	13.03	42.5	F	G1
8105.600	EX	156 1.8 16V Twin Spark	AR 32201	7779402	7.0	13.03	46.0	F	G1
8102.600	IN	156 1.8 16V Twin Spark	AR 32205	60811087	7.0	13.03	42.5	F	G1
8105.600	EX	156 1.8 16V Twin Spark	AR 32205	60811090	7.0	13.03	46.0	F	G1
8105.600	EX	156 1.8 16V Twin Spark	AR 32205	60811091	7.0	13.03	46.0	F	G1
8102.600	IN	156 1.8 16V Twin Spark	AR 32205	7756897	7.0	13.03	42.5	F	G1
8102.600	IN	156 1.8 16V Twin Spark	AR 32205	7757053	7.0	13.03	42.5	F	G1
8105.600	EX	156 1.8 16V Twin Spark	AR 32205	7779402	7.0	13.03	46.0	F	G1

(D1) Internal diameter, (D2) External diameter, (B) Shape, (C) Material

VALVE GUIDES

ALFA ROMEO

IVT Ref.	Type	Model	Engine	OEM Ref.	D1	D2	Length	B	C
8102.600	IN	156 2.0 16V Twin Spark	AR 32301	60811087	7.0	13.03	42.5	F	G1
8105.600	EX	156 2.0 16V Twin Spark	AR 32301	60811090	7.0	13.03	46.0	F	G1
8105.600	EX	156 2.0 16V Twin Spark	AR 32301	60811091	7.0	13.03	46.0	F	G1
8102.600	IN	156 2.0 16V Twin Spark	AR 32301	7756897	7.0	13.03	42.5	F	G1
8102.600	IN	156 2.0 16V Twin Spark	AR 32301	7757053	7.0	13.03	42.5	F	G1
8105.600	EX	156 2.0 16V Twin Spark	AR 32301	7779402	7.0	13.03	46.0	F	G1
8102.600	IN	156 2.0 16V Twin Spark	AR 32310	60811087	7.0	13.03	42.5	F	G1
8105.600	EX	156 2.0 16V Twin Spark	AR 32310	60811090	7.0	13.03	46.0	F	G1
8105.600	EX	156 2.0 16V Twin Spark	AR 32310	60811091	7.0	13.03	46.0	F	G1
8102.600	IN	156 2.0 16V Twin Spark	AR 32310	7756897	7.0	13.03	42.5	F	G1
8102.600	IN	156 2.0 16V Twin Spark	AR 32310	7757053	7.0	13.03	42.5	F	G1
8105.600	EX	156 2.0 16V Twin Spark	AR 32310	7779402	7.0	13.03	46.0	F	G1
8102.600	IN	156 2.0 JTS	937 A1.000	60811087	7.0	13.03	42.5	F	G1
8105.600	EX	156 2.0 JTS	937 A1.000	60811090	7.0	13.03	46.0	F	G1
8105.600	EX	156 2.0 JTS	937 A1.000	60811091	7.0	13.03	46.0	F	G1
8102.600	IN	156 2.0 JTS	937 A1.000	7756897	7.0	13.03	42.5	F	G1
8102.600	IN	156 2.0 JTS	937 A1.000	7757053	7.0	13.03	42.5	F	G1
8105.600	EX	156 2.0 JTS	937 A1.000	7779402	7.0	13.03	46.0	F	G1
8102.600	IN	156 2.0 Twin Spark	AR 32303	60811087	7.0	13.03	42.5	F	G1
8105.600	EX	156 2.0 Twin Spark	AR 32303	60811090	7.0	13.03	46.0	F	G1
8105.600	EX	156 2.0 Twin Spark	AR 32303	60811091	7.0	13.03	46.0	F	G1
8102.600	IN	156 2.0 Twin Spark	AR 32303	7756897	7.0	13.03	42.5	F	G1
8102.600	IN	156 2.0 Twin Spark	AR 32303	7757053	7.0	13.03	42.5	F	G1
8105.600	EX	156 2.0 Twin Spark	AR 32303	7779402	7.0	13.03	46.0	F	G1
8186.105	IN-EX	156 Sportwagon (932), 1.9 JTD	937 A5.000	55210016	5.0	10.03	46.7	A	S06
8186.105	IN-EX	156 Sportwagon (932), 1.9 JTD 16	937 A5.000	55210016	5.0	10.03	46.7	A	S06
8102.600	IN	156 Sportwagon 1.6 16V Twin Sp	AR 32102	60811087	7.0	13.03	42.5	F	G1
8105.600	EX	156 Sportwagon 1.6 16V Twin Sp	AR 32102	60811090	7.0	13.03	46.0	F	G1
8105.600	EX	156 Sportwagon 1.6 16V Twin Sp	AR 32102	60811091	7.0	13.03	46.0	F	G1
8102.600	IN	156 Sportwagon 1.6 16V Twin Sp	AR 32102	7756897	7.0	13.03	42.5	F	G1
8102.600	IN	156 Sportwagon 1.6 16V Twin Sp	AR 32102	7757053	7.0	13.03	42.5	F	G1
8105.600	EX	156 Sportwagon 1.6 16V Twin Sp	AR 32102	7779402	7.0	13.03	46.0	F	G1
8102.600	IN	156 Sportwagon 1.6 16V Twin Sp	AR 67601	60811087	7.0	13.03	42.5	F	G1
8105.600	EX	156 Sportwagon 1.6 16V Twin Sp	AR 67601	60811090	7.0	13.03	46.0	F	G1
8105.600	EX	156 Sportwagon 1.6 16V Twin Sp	AR 67601	60811091	7.0	13.03	46.0	F	G1
8102.600	IN	156 Sportwagon 1.6 16V Twin Sp	AR 67601	7756897	7.0	13.03	42.5	F	G1
8102.600	IN	156 Sportwagon 1.6 16V Twin Sp	AR 67601	7757053	7.0	13.03	42.5	F	G1
8105.600	EX	156 Sportwagon 1.6 16V Twin Sp	AR 67601	7779402	7.0	13.03	46.0	F	G1
8102.600	IN	156 Sportwagon 1.8 16V Twin Sp	AR 32201	60811087	7.0	13.03	42.5	F	G1
8105.600	EX	156 Sportwagon 1.8 16V Twin Sp	AR 32201	60811090	7.0	13.03	46.0	F	G1
8105.600	EX	156 Sportwagon 1.8 16V Twin Sp	AR 32201	60811091	7.0	13.03	46.0	F	G1
8102.600	IN	156 Sportwagon 1.8 16V Twin Sp	AR 32201	7756897	7.0	13.03	42.5	F	G1
8102.600	IN	156 Sportwagon 1.8 16V Twin Sp	AR 32201	7757053	7.0	13.03	42.5	F	G1
8105.600	EX	156 Sportwagon 1.8 16V Twin Sp	AR 32201	7779402	7.0	13.03	46.0	F	G1
8102.600	IN	156 Sportwagon 1.8 16V Twin Sp	AR 32205	60811087	7.0	13.03	42.5	F	G1
8105.600	EX	156 Sportwagon 1.8 16V Twin Sp	AR 32205	60811090	7.0	13.03	46.0	F	G1
8105.600	EX	156 Sportwagon 1.8 16V Twin Sp	AR 32205	60811091	7.0	13.03	46.0	F	G1
8102.600	IN	156 Sportwagon 1.8 16V Twin Sp	AR 32205	7756897	7.0	13.03	42.5	F	G1
8102.600	IN	156 Sportwagon 1.8 16V Twin Sp	AR 32205	7757053	7.0	13.03	42.5	F	G1
8105.600	EX	156 Sportwagon 1.8 16V Twin Sp	AR 32205	7779402	7.0	13.03	46.0	F	G1
8102.600	IN	156 Sportwagon 2.0 16V Twin Sp	AR 32301	60811087	7.0	13.03	42.5	F	G1
8105.600	EX	156 Sportwagon 2.0 16V Twin Sp	AR 32301	60811090	7.0	13.03	46.0	F	G1
8105.600	EX	156 Sportwagon 2.0 16V Twin Sp	AR 32301	60811091	7.0	13.03	46.0	F	G1
8102.600	IN	156 Sportwagon 2.0 16V Twin Sp	AR 32301	7756897	7.0	13.03	42.5	F	G1
8102.600	IN	156 Sportwagon 2.0 16V Twin Sp	AR 32301	7757053	7.0	13.03	42.5	F	G1
8105.600	EX	156 Sportwagon 2.0 16V Twin Sp	AR 32301	7779402	7.0	13.03	46.0	F	G1
8102.600	IN	156 Sportwagon 2.0 16V Twin Sp	AR 32310	60811087	7.0	13.03	42.5	F	G1
8105.600	EX	156 Sportwagon 2.0 16V Twin Sp	AR 32310	60811090	7.0	13.03	46.0	F	G1
8105.600	EX	156 Sportwagon 2.0 16V Twin Sp	AR 32310	60811091	7.0	13.03	46.0	F	G1
8102.600	IN	156 Sportwagon 2.0 16V Twin Sp	AR 32310	7756897	7.0	13.03	42.5	F	G1
8102.600	IN	156 Sportwagon 2.0 16V Twin Sp	AR 32310	7757053	7.0	13.03	42.5	F	G1
8105.600	EX	156 Sportwagon 2.0 16V Twin Sp	AR 32310	7779402	7.0	13.03	46.0	F	G1

(D1) Internal diameter, (D2) External diameter, (B) Shape, (C) Material

VALVE GUIDES

ALFA ROMEO

IVT Ref.	Type	Model	Engine	OEM Ref.	D1	D2	Length	B	C
8102.600	IN	156 Sportwagon 2.0 JTS	937 A1.000	60811087	7.0	13.03	42.5	F	G1
8105.600	EX	156 Sportwagon 2.0 JTS	937 A1.000	60811090	7.0	13.03	46.0	F	G1
8105.600	EX	156 Sportwagon 2.0 JTS	937 A1.000	60811091	7.0	13.03	46.0	F	G1
8102.600	IN	156 Sportwagon 2.0 JTS	937 A1.000	7756897	7.0	13.03	42.5	F	G1
8102.600	IN	156 Sportwagon 2.0 JTS	937 A1.000	7757053	7.0	13.03	42.5	F	G1
8105.600	EX	156 Sportwagon 2.0 JTS	937 A1.000	7779402	7.0	13.03	46.0	F	G1
8186.105	IN-EX	159 (939), 1.9 JTDM 16V	939 A2.000	55210016	5.0	10.03	46.7	A	S06
8186.105	IN-EX	159 (939), 1.9 JTDM 16V	939 A8.000/937 A8.000	55210016	5.0	10.03	46.7	A	S06
8186.105	IN-EX	159 (939), 2.0 JTDM	844 A2.000	55210016	5.0	10.03	46.7	A	S06
8186.105	IN-EX	159 (939), 2.0 JTDM	939 B3.000	55210016	5.0	10.03	46.7	A	S06
8186.105	IN-EX	159 (939), 2.4 JTDM	939 A9.000	55210016	5.0	10.03	46.7	A	S06
8186.105	IN-EX	159 (939), 2.4 JTDM Q4	939 A9.000	55210016	5.0	10.03	46.7	A	S06
8130.104	IN-EX	159 (939_), 1.9 JTS	939 A6.000	71739350	6.0	10.03	36.0	A	S03
8130.104	IN-EX	159 (939_), 2.2 JTS	939 A5.000	71739350	6.0	10.03	36.0	A	S03
8186.105	IN-EX	159 Sportwagon (939), 1.9 JTDM	937 A8.000	55210016	5.0	10.03	46.7	A	S06
8186.105	IN-EX	159 Sportwagon (939), 1.9 JTDM	939 A2.000	55210016	5.0	10.03	46.7	A	S06
8186.105	IN-EX	159 Sportwagon (939), 2.0 JTDM	844 A2.000	55210016	5.0	10.03	46.7	A	S06
8186.105	IN-EX	159 Sportwagon (939), 2.0 JTDM	939 B3.000	55210016	5.0	10.03	46.7	A	S06
8186.105	IN-EX	159 Sportwagon (939), 2.4 JTDM	939 A9.000	55210016	5.0	10.03	46.7	A	S06
8186.105	IN-EX	159 Sportwagon (939), 2.4 JTDM	939 A9.000	55210016	5.0	10.03	46.7	A	S06
8130.104	IN-EX	159 Sportwagon (939_), 1.9 JTS	939 A6.000	71739350	6.0	10.03	36.0	A	S03
8130.104	IN-EX	159 Sportwagon (939_), 2.2 JTS	939 A5.000	71739350	6.0	10.03	36.0	A	S03
8186.105	IN-EX	166 (936), 2.4 JTD	936 B.000/841 M.000	55210016	5.0	10.03	46.7	A	S06
8095.600	IN-EX	AR 6 Furgonato 2.4 D	8144.61.200	4749395	8.0	13.03	56.0	F	G1
8095.600	IN-EX	AR 6 Furgonato 2.4 TD	8144.21.220	4749395	8.0	13.03	56.0	F	G1
8095.600	IN-EX	AR 6 Furgonato 2.5 D	8144.67.220	4749395	8.0	13.03	56.0	F	G1
8141.100	IN-EX	AR 6 Kasten (280_), 2.4 D	8144.61.200	4726483	8.0	13.03	60.0	A	G1
8141.100	IN-EX	AR 6 Kasten (280_), 2.4 TD	8144.21.220	4726483	8.0	13.03	60.0	A	G1
8095.600	IN-EX	AR 8 2.4 D	8140.61.200	4749395	8.0	13.03	56.0	F	G1
8095.600	IN-EX	AR 8 2.4 TD	8140.21.200	4749395	8.0	13.03	56.0	F	G1
8095.600	IN-EX	AR 8 Furgonato 2.4 D	8140.61.200	4749395	8.0	13.03	56.0	F	G1
8095.600	IN-EX	AR 8 Furgonato 2.4 TD	8140.21.200	4749395	8.0	13.03	56.0	F	G1
8141.100	IN-EX	AR 8 Kasten (280_), 2.4 D	8140.61.200	4726483	8.0	13.03	60.0	A	G1
8141.100	IN-EX	AR 8 Kasten (280_), 2.4 TD	8140.21.200 D.I.	4726483	8.0	13.03	60.0	A	G1
8141.100	IN-EX	AR 8 Pritsche/Fahrgestell (280_),	8140.61.200	4726483	8.0	13.03	60.0	A	G1
8141.100	IN-EX	AR 8 Pritsche/Fahrgestell (280_),	8140.21.200 D.I.	4726483	8.0	13.03	60.0	A	G1
8130.104	IN-EX	BRERA (939_), 2.2 JTS	939 A5.000	71739350	6.0	10.03	36.0	A	S03
8186.105	IN-EX	BRERA, 2.0 JTDM	844 A2.000	55210016	5.0	10.03	46.7	A	S06
8186.105	IN-EX	BRERA, 2.0 JTDM	939 B3.000	55210016	5.0	10.03	46.7	A	S06
8186.105	IN-EX	BRERA, 2.4 JTDM 20V	939 A3.000	55210016	5.0	10.03	46.7	A	S06
8186.105	IN-EX	BRERA, 2.4 JTDM 20V	939 A9.000	55210016	5.0	10.03	46.7	A	S06
8000.605	IN-EX	Giulietta 1.4 TB	940 A2.000	46441525	6.0	10.03	39.7	F	S06
8000.605	IN-EX	Giulietta 1.4 TB	940 B1.000	46441525	6.0	10.03	39.7	F	S06
8186.105	IN-EX	GT (937), 1.9 JTD	937 A5.000	55210016	5.0	10.03	46.7	A	S06
8102.600	IN	GT 1.8 TS	AR 32205	60811087	7.0	13.03	42.5	F	G1
8105.600	EX	GT 1.8 TS	AR 32205	60811090	7.0	13.03	46.0	F	G1
8105.600	EX	GT 1.8 TS	AR 32205	60811091	7.0	13.03	46.0	F	G1
8102.600	IN	GT 1.8 TS	AR 32205	7756897	7.0	13.03	42.5	F	G1
8102.600	IN	GT 1.8 TS	AR 32205	7757053	7.0	13.03	42.5	F	G1
8105.600	EX	GT 1.8 TS	AR 32205	7779402	7.0	13.03	46.0	F	G1
8102.600	IN	GT 2.0 JTS	937 A1.000	60811087	7.0	13.03	42.5	F	G1
8105.600	EX	GT 2.0 JTS	937 A1.000	60811090	7.0	13.03	46.0	F	G1
8105.600	EX	GT 2.0 JTS	937 A1.000	60811091	7.0	13.03	46.0	F	G1
8102.600	IN	GT 2.0 JTS	937 A1.000	7756897	7.0	13.03	42.5	F	G1
8102.600	IN	GT 2.0 JTS	937 A1.000	7757053	7.0	13.03	42.5	F	G1
8105.600	EX	GT 2.0 JTS	937 A1.000	7779402	7.0	13.03	46.0	F	G1
8102.600	IN	GTV 1.8 16V	AR 32201	60811087	7.0	13.03	42.5	F	G1
8105.600	EX	GTV 1.8 16V	AR 32201	60811090	7.0	13.03	46.0	F	G1
8105.600	EX	GTV 1.8 16V	AR 32201	60811091	7.0	13.03	46.0	F	G1
8102.600	IN	GTV 1.8 16V	AR 32201	7756897	7.0	13.03	42.5	F	G1
8102.600	IN	GTV 1.8 16V	AR 32201	7757053	7.0	13.03	42.5	F	G1
8105.600	EX	GTV 1.8 16V	AR 32201	7779402	7.0	13.03	46.0	F	G1

(D1) Internal diameter, (D2) External diameter, (B) Shape, (C) Material

VALVE GUIDES

ALFA ROMEO

IVT Ref.	Type	Model	Engine	OEM Ref.	D1	D2	Length	B	C
8102.600	IN	GTV 2.0 16V Twin Spark	AR 16201	60811087	7.0	13.03	42.5	F	G1
8105.600	EX	GTV 2.0 16V Twin Spark	AR 16201	60811090	7.0	13.03	46.0	F	G1
8105.600	EX	GTV 2.0 16V Twin Spark	AR 16201	60811091	7.0	13.03	46.0	F	G1
8102.600	IN	GTV 2.0 16V Twin Spark	AR 16201	7756897	7.0	13.03	42.5	F	G1
8102.600	IN	GTV 2.0 16V Twin Spark	AR 16201	7757053	7.0	13.03	42.5	F	G1
8105.600	EX	GTV 2.0 16V Twin Spark	AR 16201	7779402	7.0	13.03	46.0	F	G1
8102.600	IN	GTV 2.0 16V Twin Spark	AR 32210	60811087	7.0	13.03	42.5	F	G1
8105.600	EX	GTV 2.0 16V Twin Spark	AR 32210	60811090	7.0	13.03	46.0	F	G1
8105.600	EX	GTV 2.0 16V Twin Spark	AR 32210	60811091	7.0	13.03	46.0	F	G1
8102.600	IN	GTV 2.0 16V Twin Spark	AR 32210	7756897	7.0	13.03	42.5	F	G1
8102.600	IN	GTV 2.0 16V Twin Spark	AR 32210	7757053	7.0	13.03	42.5	F	G1
8105.600	EX	GTV 2.0 16V Twin Spark	AR 32210	7779402	7.0	13.03	46.0	F	G1
8102.600	IN	GTV 2.0 JTS	937 A1.000	60811087	7.0	13.03	42.5	F	G1
8105.600	EX	GTV 2.0 JTS	937 A1.000	60811090	7.0	13.03	46.0	F	G1
8105.600	EX	GTV 2.0 JTS	937 A1.000	60811091	7.0	13.03	46.0	F	G1
8102.600	IN	GTV 2.0 JTS	937 A1.000	7756897	7.0	13.03	42.5	F	G1
8102.600	IN	GTV 2.0 JTS	937 A1.000	7757053	7.0	13.03	42.5	F	G1
8105.600	EX	GTV 2.0 JTS	937 A1.000	7779402	7.0	13.03	46.0	F	G1
8186.105	IN-EX	MITO (955), 1.6 JTDM	198 A2.000/955 A3.000	55210016	5.0	10.03	46.7	A	S06
8186.105	IN-EX	MITO (955), 1.6 JTDM	955 A4.000	55210016	5.0	10.03	46.7	A	S06
8003.104	IN-EX	Mito 0.9	312 A2.000	71769214	5.0	9.06	40.5	A	S03
8003.104	IN-EX	Mito 0.9	312 A2.000	71769215	5.0	9.06	40.5	A	S03
8000.605	IN-EX	Mito 1.4	199 A6.000	46441525	6.0	10.03	39.7	F	S06
8000.605	IN-EX	Mito 1.4	955 A1.000	46441525	6.0	10.03	39.7	F	S06
8000.605	IN-EX	Mito 1.4	955 A6.000	46441525	6.0	10.03	39.7	F	S06
8000.605	IN-EX	Mito 1.4	955 A9.000	46441525	6.0	10.03	39.7	F	S06
8000.605	IN-EX	Mito 1.4 TB	199 A8.000	46441525	6.0	10.03	39.7	F	S06
8000.605	IN-EX	Mito 1.4 TB	940 A2.000	46441525	6.0	10.03	39.7	F	S06
8000.605	IN-EX	Mito 1.4 TB	955 A2.000	46441525	6.0	10.03	39.7	F	S06
8000.605	IN-EX	Mito 1.4 TB	955 A7.000	46441525	6.0	10.03	39.7	F	S06
8000.605	IN-EX	Mito 1.4 TB	955 A8.000	46441525	6.0	10.03	39.7	F	S06
8186.105	IN-EX	SPIDER (939), 2.0 JTDM	844 A2.000	55210016	5.0	10.03	46.7	A	S06
8186.105	IN-EX	SPIDER (939), 2.0 JTDM	939 B3.000	55210016	5.0	10.03	46.7	A	S06
8186.105	IN-EX	SPIDER (939), 2.4 JTDM	939 A3.000	55210016	5.0	10.03	46.7	A	S06
8186.105	IN-EX	SPIDER (939), 2.4 JTDM	939 A3.000	55210016	5.0	10.03	46.7	A	S06
8130.104	IN-EX	SPIDER (939_), 2.2 JTS	939 A5.000	71739350	6.0	10.03	36.0	A	S03
8102.600	IN	Spider 1.8 16V	AR 32201	60811087	7.0	13.03	42.5	F	G1
8105.600	EX	Spider 1.8 16V	AR 32201	60811090	7.0	13.03	46.0	F	G1
8105.600	EX	Spider 1.8 16V	AR 32201	60811091	7.0	13.03	46.0	F	G1
8102.600	IN	Spider 1.8 16V	AR 32201	7756897	7.0	13.03	42.5	F	G1
8102.600	IN	Spider 1.8 16V	AR 32201	7757053	7.0	13.03	42.5	F	G1
8105.600	EX	Spider 1.8 16V	AR 32201	7779402	7.0	13.03	46.0	F	G1
8102.600	IN	Spider 2.0 JTS	937 A1.000	60811087	7.0	13.03	42.5	F	G1
8105.600	EX	Spider 2.0 JTS	937 A1.000	60811090	7.0	13.03	46.0	F	G1
8105.600	EX	Spider 2.0 JTS	937 A1.000	60811091	7.0	13.03	46.0	F	G1
8102.600	IN	Spider 2.0 JTS	937 A1.000	7756897	7.0	13.03	42.5	F	G1
8102.600	IN	Spider 2.0 JTS	937 A1.000	7757053	7.0	13.03	42.5	F	G1
8105.600	EX	Spider 2.0 JTS	937 A1.000	7779402	7.0	13.03	46.0	F	G1
8102.600	IN	Spider 2.0 Twin Spark	AR 16201	60811087	7.0	13.03	42.5	F	G1
8105.600	EX	Spider 2.0 Twin Spark	AR 16201	60811090	7.0	13.03	46.0	F	G1
8105.600	EX	Spider 2.0 Twin Spark	AR 16201	60811091	7.0	13.03	46.0	F	G1
8102.600	IN	Spider 2.0 Twin Spark	AR 16201	7756897	7.0	13.03	42.5	F	G1
8102.600	IN	Spider 2.0 Twin Spark	AR 16201	7757053	7.0	13.03	42.5	F	G1
8105.600	EX	Spider 2.0 Twin Spark	AR 16201	7779402	7.0	13.03	46.0	F	G1
8102.600	IN	Spider 2.0 Twin Spark	AR 32301	60811087	7.0	13.03	42.5	F	G1
8105.600	EX	Spider 2.0 Twin Spark	AR 32301	60811090	7.0	13.03	46.0	F	G1
8105.600	EX	Spider 2.0 Twin Spark	AR 32301	60811091	7.0	13.03	46.0	F	G1
8102.600	IN	Spider 2.0 Twin Spark	AR 32301	7756897	7.0	13.03	42.5	F	G1
8102.600	IN	Spider 2.0 Twin Spark	AR 32301	7757053	7.0	13.03	42.5	F	G1
8105.600	EX	Spider 2.0 Twin Spark	AR 32301	7779402	7.0	13.03	46.0	F	G1
8102.600	IN	Spider 2.0 Twin Spark	AR 32310	60811087	7.0	13.03	42.5	F	G1
8105.600	EX	Spider 2.0 Twin Spark	AR 32310	60811090	7.0	13.03	46.0	F	G1

(D1) Internal diameter, (D2) External diameter, (B) Shape, (C) Material

VALVE GUIDES

IVT Ref.	Type	Model	Engine	OEM Ref.	D1	D2	Length	B	C
ALFA ROMEO									
8105.600	EX	Spider 2.0 Twin Spark	AR 32310	60811091	7.0	13.03	46.0	F	G1
8102.600	IN	Spider 2.0 Twin Spark	AR 32310	7756897	7.0	13.03	42.5	F	G1
8102.600	IN	Spider 2.0 Twin Spark	AR 32310	7757053	7.0	13.03	42.5	F	G1
8105.600	EX	Spider 2.0 Twin Spark	AR 32310	7779402	7.0	13.03	46.0	F	G1
ALPIN									
8134.601	IN-EX	V6, 2.9 GT	Z6W		8.0	13.07	45.0	F	B
AUDI									
8071.701	IN-EX	100	WH	049103419	8.0	12.06	42.3	G	B
8054.701	IN-EX	100 (43, C2), 1.6	YV	056103419A	8.0	12.06	36.5	G	B
8054.701	IN-EX	100 (43, C2), 1.9	WH	056103419A	8.0	12.06	36.5	G	B
8054.701	IN-EX	100 (43, C2), 2.0 D	CN	056103419A	8.0	12.06	36.5	G	B
8054.701	IN-EX	100 (43, C2), 2.1	WC/WG	056103419A	8.0	12.06	36.5	G	B
8054.701	IN-EX	100 (43, C2), 2.1	WE/WB	056103419A	8.0	12.06	36.5	G	B
8054.701	IN-EX	100 (44, 44Q, C3), 1.8	JW /NP/DS	056103419A	8.0	12.06	36.5	G	B
8054.701	IN-EX	100 (44, 44Q, C3), 1.8	RS/DR	056103419A	8.0	12.06	36.5	G	B
8054.701	IN-EX	100 (44, 44Q, C3), 1.8	SH	056103419A	8.0	12.06	36.5	G	B
8054.701	IN-EX	100 (44, 44Q, C3), 1.8 KAT	PH/4B	056103419A	8.0	12.06	36.5	G	B
8054.701	IN-EX	100 (44, 44Q, C3), 1.8 quattro	JW /NP	056103419A	8.0	12.06	36.5	G	B
8054.701	IN-EX	100 (44, 44Q, C3), 1.8 quattro	SH	056103419A	8.0	12.06	36.5	G	B
8054.701	IN-EX	100 (44, 44Q, C3), 1.8 quattro KA	PH/4B	056103419A	8.0	12.06	36.5	G	B
8054.701	IN-EX	100 (44, 44Q, C3), 1.9	WH	056103419A	8.0	12.06	36.5	G	B
8054.701	IN-EX	100 (44, 44Q, C3), 2.0	KP	056103419A	8.0	12.06	36.5	G	B
8054.701	IN-EX	100 (44, 44Q, C3), 2.0	SL	056103419A	8.0	12.06	36.5	G	B
8054.701	IN-EX	100 (44, 44Q, C3), 2.0 D	CN	056103419A	8.0	12.06	36.5	G	B
8054.701	IN-EX	100 (44, 44Q, C3), 2.0 D Turbo	DE	056103419A	8.0	12.06	36.5	G	B
8054.701	IN-EX	100 (44, 44Q, C3), 2.0 D Turbo	NC	056103419A	8.0	12.06	36.5	G	B
8054.701	IN-EX	100 (44, 44Q, C3), 2.0 KAT	RT	056103419A	8.0	12.06	36.5	G	B
8054.701	IN-EX	100 (44, 44Q, C3), 2.1	WC	056103419A	8.0	12.06	36.5	G	B
8054.701	IN-EX	100 (44, 44Q, C3), 2.2	KU	056103419A	8.0	12.06	36.5	G	B
8054.701	IN-EX	100 (44, 44Q, C3), 2.2	KZ	056103419A	8.0	12.06	36.5	G	B
8054.701	IN-EX	100 (44, 44Q, C3), 2.2 E Turbo qu	MC	056103419A	8.0	12.06	36.5	G	B
8054.701	IN-EX	100 (44, 44Q, C3), 2.2 KAT	KU/HX	056103419A	8.0	12.06	36.5	G	B
8054.701	IN-EX	100 (44, 44Q, C3), 2.2 quattro	KU	056103419A	8.0	12.06	36.5	G	B
8054.701	IN-EX	100 (44, 44Q, C3), 2.2 quattro KA	KU/HX	056103419A	8.0	12.06	36.5	G	B
8054.701	IN-EX	100 (44, 44Q, C3), 2.2 Turbo	MC	056103419A	8.0	12.06	36.5	G	B
8054.701	IN-EX	100 (44, 44Q, C3), 2.3 E	NF	056103419A	8.0	12.06	36.5	G	B
8054.701	IN-EX	100 (44, 44Q, C3), 2.3 E	NF	056103419A	8.0	12.06	36.5	G	B
8054.701	IN-EX	100 (44, 44Q, C3), 2.3 E quattro	NF	056103419A	8.0	12.06	36.5	G	B
8054.701	IN-EX	100 (44, 44Q, C3), 2.3 quattro	NF	056103419A	8.0	12.06	36.5	G	B
8054.701	IN-EX	100 (44, 44Q, C3), 2.4 D	3D	056103419A	8.0	12.06	36.5	G	B
8054.701	IN-EX	100 (44, 44Q, C3), 2.5 TDI	1T	056103419A	8.0	12.06	36.5	G	B
8054.701	IN-EX	100 (4A, C4), 2.0	AAE	056103419A	8.0	12.06	36.5	G	B
8054.701	IN-EX	100 (4A, C4), 2.0 E	ABK/AAD	056103419A	8.0	12.06	36.5	G	B
8054.701	IN-EX	100 (4A, C4), 2.0 E quattro	AAD	056103419A	8.0	12.06	36.5	G	B
8054.701	IN-EX	100 (4A, C4), 2.3 E	AAR	056103419A	8.0	12.06	36.5	G	B
8054.701	IN-EX	100 (4A, C4), 2.3 E quattro	AAR	056103419A	8.0	12.06	36.5	G	B
8054.701	IN-EX	100 (4A, C4), 2.4 D	AAS	056103419A	8.0	12.06	36.5	G	B
8054.701	IN-EX	100 (4A, C4), 2.5 TDI	AAT/ABP	056103419A	8.0	12.06	36.5	G	B
8054.701	IN-EX	100 (4A, C4), 2.6	ABC	056103419A	8.0	12.06	36.5	G	B
8054.701	IN-EX	100 (4A, C4), 2.6 quattro	ABC	056103419A	8.0	12.06	36.5	G	B
8054.701	IN-EX	100 (4A, C4), 2.8 E	AAH	056103419A	8.0	12.06	36.5	G	B
8054.701	IN-EX	100 (4A, C4), 2.8 E quattro	AAH	056103419A	8.0	12.06	36.5	G	B
8054.701	IN-EX	100 (C1), 1.6	YM	056103419A	8.0	12.06	36.5	G	B
8071.701	IN-EX	100 Avant	WH	049103419	8.0	12.06	42.3	G	B
8054.701	IN-EX	100 Avant (43, C2), 1.6	YV	056103419A	8.0	12.06	36.5	G	B
8054.701	IN-EX	100 Avant (43, C2), 1.9	WH	056103419A	8.0	12.06	36.5	G	B
8054.701	IN-EX	100 Avant (43, C2), 2.0 D	CN	056103419A	8.0	12.06	36.5	G	B
8054.701	IN-EX	100 Avant (43, C2), 2.1	WC/WG	056103419A	8.0	12.06	36.5	G	B
8054.701	IN-EX	100 Avant (43, C2), 2.1	WE/WB	056103419A	8.0	12.06	36.5	G	B
8054.701	IN-EX	100 Avant (44, 44Q, C3), 1.8	JW /NP/DS	056103419A	8.0	12.06	36.5	G	B

(D1) Internal diameter, (D2) External diameter, (B) Shape, (C) Material

VALVE GUIDES

IVT Ref.	Type	Model	Engine	OEM Ref.	D1	D2	Length	B	C
AUDI									
8054.701	IN-EX	100 Avant (44, 44Q, C3), 1.8	RS/DR	056103419A	8.0	12.06	36.5	G	B
8054.701	IN-EX	100 Avant (44, 44Q, C3), 1.8	SH	056103419A	8.0	12.06	36.5	G	B
8054.701	IN-EX	100 Avant (44, 44Q, C3), 1.8 KAT	PH/4B	056103419A	8.0	12.06	36.5	G	B
8054.701	IN-EX	100 Avant (44, 44Q, C3), 1.8 quatt	JW /NP	056103419A	8.0	12.06	36.5	G	B
8054.701	IN-EX	100 Avant (44, 44Q, C3), 1.8 quatt	SH	056103419A	8.0	12.06	36.5	G	B
8054.701	IN-EX	100 Avant (44, 44Q, C3), 1.8 quatt	PH/4B	056103419A	8.0	12.06	36.5	G	B
8054.701	IN-EX	100 Avant (44, 44Q, C3), 1.9	WH	056103419A	8.0	12.06	36.5	G	B
8054.701	IN-EX	100 Avant (44, 44Q, C3), 2.0	SL	056103419A	8.0	12.06	36.5	G	B
8054.701	IN-EX	100 Avant (44, 44Q, C3), 2.0 D	CN	056103419A	8.0	12.06	36.5	G	B
8054.701	IN-EX	100 Avant (44, 44Q, C3), 2.0 E	KP	056103419A	8.0	12.06	36.5	G	B
8054.701	IN-EX	100 Avant (44, 44Q, C3), 2.0 E KA	RT	056103419A	8.0	12.06	36.5	G	B
8054.701	IN-EX	100 Avant (44, 44Q, C3), 2.0 TD	DE	056103419A	8.0	12.06	36.5	G	B
8054.701	IN-EX	100 Avant (44, 44Q, C3), 2.0 TD	NC	056103419A	8.0	12.06	36.5	G	B
8054.701	IN-EX	100 Avant (44, 44Q, C3), 2.1	WC	056103419A	8.0	12.06	36.5	G	B
8054.701	IN-EX	100 Avant (44, 44Q, C3), 2.2	KU	056103419A	8.0	12.06	36.5	G	B
8054.701	IN-EX	100 Avant (44, 44Q, C3), 2.2	KZ	056103419A	8.0	12.06	36.5	G	B
8054.701	IN-EX	100 Avant (44, 44Q, C3), 2.2 KAT	KU/HX	056103419A	8.0	12.06	36.5	G	B
8054.701	IN-EX	100 Avant (44, 44Q, C3), 2.2 quatt	KU	056103419A	8.0	12.06	36.5	G	B
8054.701	IN-EX	100 Avant (44, 44Q, C3), 2.2 quatt	KU/HX	056103419A	8.0	12.06	36.5	G	B
8054.701	IN-EX	100 Avant (44, 44Q, C3), 2.2 Turb	MC	056103419A	8.0	12.06	36.5	G	B
8054.701	IN-EX	100 Avant (44, 44Q, C3), 2.2 Turb	MC	056103419A	8.0	12.06	36.5	G	B
8054.701	IN-EX	100 Avant (44, 44Q, C3), 2.3	NF	056103419A	8.0	12.06	36.5	G	B
8054.701	IN-EX	100 Avant (44, 44Q, C3), 2.3	NF	056103419A	8.0	12.06	36.5	G	B
8054.701	IN-EX	100 Avant (44, 44Q, C3), 2.3 E qu	NF	056103419A	8.0	12.06	36.5	G	B
8054.701	IN-EX	100 Avant (44, 44Q, C3), 2.3 quatt	NF	056103419A	8.0	12.06	36.5	G	B
8054.701	IN-EX	100 Avant (44, 44Q, C3), 2.4 D	3D	056103419A	8.0	12.06	36.5	G	B
8054.701	IN-EX	100 Avant (44, 44Q, C3), 2.5 TDI	1T	056103419A	8.0	12.06	36.5	G	B
8054.701	IN-EX	100 Avant (4A, C4), 2.0 E	AAE	056103419A	8.0	12.06	36.5	G	B
8054.701	IN-EX	100 Avant (4A, C4), 2.0 E	ABK/AAD	056103419A	8.0	12.06	36.5	G	B
8054.701	IN-EX	100 Avant (4A, C4), 2.0 E quattro	AAD	056103419A	8.0	12.06	36.5	G	B
8054.701	IN-EX	100 Avant (4A, C4), 2.3 E	AAR	056103419A	8.0	12.06	36.5	G	B
8054.701	IN-EX	100 Avant (4A, C4), 2.3 E quattro	AAR	056103419A	8.0	12.06	36.5	G	B
8054.701	IN-EX	100 Avant (4A, C4), 2.4 D	AAS	056103419A	8.0	12.06	36.5	G	B
8054.701	IN-EX	100 Avant (4A, C4), 2.5 TDI	AAT/ABP	056103419A	8.0	12.06	36.5	G	B
8054.701	IN-EX	100 Avant (4A, C4), 2.6	ABC	056103419A	8.0	12.06	36.5	G	B
8054.701	IN-EX	100 Avant (4A, C4), 2.6 quattro	ABC	056103419A	8.0	12.06	36.5	G	B
8054.701	IN-EX	100 Avant (4A, C4), 2.8 E	AAH	056103419A	8.0	12.06	36.5	G	B
8054.701	IN-EX	100 Avant (4A, C4), 2.8 E quattro	AAH	056103419A	8.0	12.06	36.5	G	B
8071.701	IN-EX	100 Avant / C 5 S / CL 5 S	***** 2144 ccm	049103419	8.0	12.06	42.3	G	B
8071.701	IN-EX	100 Avant / Coupé GT 5 S	***** 1921 ccm	049103419	8.0	12.06	42.3	G	B
8071.701	IN-EX	100 Avant C 5 E / CL 5 E	No. F43-B-035.001 ->	049103419	8.0	12.06	42.3	G	B
8071.701	IN-EX	100 C 5	***** 2144 ccm	049103419	8.0	12.06	42.3	G	B
8071.701	IN-EX	100 C 5 / CL 5 / GL 5 / L 5	***** 1921 ccm	049103419	8.0	12.06	42.3	G	B
8071.701	IN-EX	100 CD / CS	***** 2144 ccm	049103419	8.0	12.06	42.3	G	B
8071.701	IN-EX	100 Coupé GT 5 S / GTE 5 S	***** 1921 ccm	049103419	8.0	12.06	42.3	G	B
8071.701	IN-EX	100 GL 5 E / CD 5 E	No. F43-B-035.001 ->	049103419	8.0	12.06	42.3	G	B
8071.701	IN-EX	100 GL 5 S / CD 5 S	***** 2144 ccm	049103419	8.0	12.06	42.3	G	B
8078.601	IN-EX	100 S4 20V	AAN 20V	027103415	7.0	12.06	38.0	F	B
8064.701	IN-EX	100 S4 20V	AAN 20V	027103419	7.0	12.06	38.0	G	B
8071.701	IN-EX	200	***** 2144 ccm	049103419	8.0	12.06	42.3	G	B
8054.701	IN-EX	200 (43), 2.1 5E	WC	056103419A	8.0	12.06	36.5	G	B
8054.701	IN-EX	200 (43), 2.1 5T	WJ	056103419A	8.0	12.06	36.5	G	B
8054.701	IN-EX	200 (44, 44Q), 2.1 Turbo	KG	056103419A	8.0	12.06	36.5	G	B
8054.701	IN-EX	200 (44, 44Q), 2.1 Turbo quattro	KG	056103419A	8.0	12.06	36.5	G	B
8054.701	IN-EX	200 (44, 44Q), 2.2	KU	056103419A	8.0	12.06	36.5	G	B
8054.701	IN-EX	200 (44, 44Q), 2.2 20V Turbo quat	3B	056103419A	8.0	12.06	36.5	G	B
8054.701	IN-EX	200 (44, 44Q), 2.2 Turbo	1B	056103419A	8.0	12.06	36.5	G	B
8054.701	IN-EX	200 (44, 44Q), 2.2 Turbo	MC	056103419A	8.0	12.06	36.5	G	B
8054.701	IN-EX	200 (44, 44Q), 2.2 Turbo quattro	1B	056103419A	8.0	12.06	36.5	G	B
8054.701	IN-EX	200 (44, 44Q), 2.2 Turbo quattro	MC	056103419A	8.0	12.06	36.5	G	B
8054.701	IN-EX	200 (44, 44Q), 2.3	NF	056103419A	8.0	12.06	36.5	G	B
8071.701	IN-EX	200 5E	No. F43-B-035.001 ->	049103419	8.0	12.06	42.3	G	B

(D1) Internal diameter, (D2) External diameter, (B) Shape, (C) Material

VALVE GUIDES

IVT Ref.	Type	Model	Engine	OEM Ref.	D1	D2	Length	B	C
AUDI									
8054.701	IN-EX	200 Avant (44, 44Q), 2.1 Turbo qu	JY/KG	056103419A	8.0	12.06	36.5	G	B
8054.701	IN-EX	200 Avant (44, 44Q), 2.2 20V Turb	3B	056103419A	8.0	12.06	36.5	G	B
8054.701	IN-EX	200 Avant (44, 44Q), 2.2 Turbo	MC	056103419A	8.0	12.06	36.5	G	B
8054.701	IN-EX	200 Avant (44, 44Q), 2.2 Turbo qu	1B	056103419A	8.0	12.06	36.5	G	B
8054.701	IN-EX	200 Avant (44, 44Q), 2.2 Turbo qu	MC	056103419A	8.0	12.06	36.5	G	B
8054.701	IN-EX	200 Avant (44, 44Q), 2.3	NF	056103419A	8.0	12.06	36.5	G	B
8054.701	IN-EX	50 (86), 1.1	HB	056103419A	8.0	12.06	36.5	G	B
8054.701	IN-EX	50 (86), 1.1	HC	056103419A	8.0	12.06	36.5	G	B
8054.701	IN-EX	50 (86), 1.3	HH	056103419A	8.0	12.06	36.5	G	B
8071.701	IN-EX	5000 (USA Models)	***** 1781 ccm	049103419	8.0	12.06	42.3	G	B
8054.701	IN-EX	80 (80, 82, B1), 1.3	ZA	056103419A	8.0	12.06	36.5	G	B
8054.701	IN-EX	80 (80, 82, B1), 1.3	ZF	056103419A	8.0	12.06	36.5	G	B
8054.701	IN-EX	80 (80, 82, B1), 1.5	ZB/YJ	056103419A	8.0	12.06	36.5	G	B
8054.701	IN-EX	80 (80, 82, B1), 1.5	ZC	056103419A	8.0	12.06	36.5	G	B
8054.701	IN-EX	80 (80, 82, B1), 1.6	YP	056103419A	8.0	12.06	36.5	G	B
8054.701	IN-EX	80 (80, 82, B1), 1.6 GT	XX	056103419A	8.0	12.06	36.5	G	B
8054.701	IN-EX	80 (80, 82, B1), 1.6 GTE	YS	056103419A	8.0	12.06	36.5	G	B
8054.701	IN-EX	80 (81, 85, B2), 1.3	EP	056103419A	8.0	12.06	36.5	G	B
8054.701	IN-EX	80 (81, 85, B2), 1.3	FY	056103419A	8.0	12.06	36.5	G	B
8054.701	IN-EX	80 (81, 85, B2), 1.3	FZ	056103419A	8.0	12.06	36.5	G	B
8054.701	IN-EX	80 (81, 85, B2), 1.6	DT	056103419A	8.0	12.06	36.5	G	B
8054.701	IN-EX	80 (81, 85, B2), 1.6	SA	056103419A	8.0	12.06	36.5	G	B
8054.701	IN-EX	80 (81, 85, B2), 1.6	WV/YN	056103419A	8.0	12.06	36.5	G	B
8054.701	IN-EX	80 (81, 85, B2), 1.6 D	JK/CR	056103419A	8.0	12.06	36.5	G	B
8054.701	IN-EX	80 (81, 85, B2), 1.6 GLE	YZ	056103419A	8.0	12.06	36.5	G	B
8054.701	IN-EX	80 (81, 85, B2), 1.6 TD	CY	056103419A	8.0	12.06	36.5	G	B
8054.701	IN-EX	80 (81, 85, B2), 1.8	JN	056103419A	8.0	12.06	36.5	G	B
8054.701	IN-EX	80 (81, 85, B2), 1.8	SF	056103419A	8.0	12.06	36.5	G	B
8054.701	IN-EX	80 (81, 85, B2), 1.8 CC quattro (85	JN	056103419A	8.0	12.06	36.5	G	B
8054.701	IN-EX	80 (81, 85, B2), 1.8 CC quattro (85	NE/JV	056103419A	8.0	12.06	36.5	G	B
8054.701	IN-EX	80 (81, 85, B2), 1.8 GTE	DZ	056103419A	8.0	12.06	36.5	G	B
8054.701	IN-EX	80 (81, 85, B2), 1.8 GTE	PV	056103419A	8.0	12.06	36.5	G	B
8054.701	IN-EX	80 (81, 85, B2), 1.8 GTE quattro (	DZ	056103419A	8.0	12.06	36.5	G	B
8054.701	IN-EX	80 (81, 85, B2), 1.8 GTE quattro (	PV	056103419A	8.0	12.06	36.5	G	B
8054.701	IN-EX	80 (81, 85, B2), 2.0	JS/HP	056103419A	8.0	12.06	36.5	G	B
8054.701	IN-EX	80 (81, 85, B2), 2.0 quattro (85Q)	JS	056103419A	8.0	12.06	36.5	G	B
8054.701	IN-EX	80 (81, 85, B2), 2.2	WE	056103419A	8.0	12.06	36.5	G	B
8054.701	IN-EX	80 (81, 85, B2), 2.2 quattro (85Q)	KK	056103419A	8.0	12.06	36.5	G	B
8054.701	IN-EX	80 (89, 89Q, 8A, B3), 1.6	ABB	056103419A	8.0	12.06	36.5	G	B
8054.701	IN-EX	80 (89, 89Q, 8A, B3), 1.6	PP	056103419A	8.0	12.06	36.5	G	B
8054.701	IN-EX	80 (89, 89Q, 8A, B3), 1.6	RN	056103419A	8.0	12.06	36.5	G	B
8054.701	IN-EX	80 (89, 89Q, 8A, B3), 1.6 D	JK	056103419A	8.0	12.06	36.5	G	B
8054.701	IN-EX	80 (89, 89Q, 8A, B3), 1.6 TD	RA/SB	056103419A	8.0	12.06	36.5	G	B
8054.701	IN-EX	80 (89, 89Q, 8A, B3), 1.8	RU	056103419A	8.0	12.06	36.5	G	B
8054.701	IN-EX	80 (89, 89Q, 8A, B3), 1.8	SD	056103419A	8.0	12.06	36.5	G	B
8054.701	IN-EX	80 (89, 89Q, 8A, B3), 1.8 E	DZ	056103419A	8.0	12.06	36.5	G	B
8054.701	IN-EX	80 (89, 89Q, 8A, B3), 1.8 E quattr	DZ	056103419A	8.0	12.06	36.5	G	B
8054.701	IN-EX	80 (89, 89Q, 8A, B3), 1.8 quattro	SD	056103419A	8.0	12.06	36.5	G	B
8054.701	IN-EX	80 (89, 89Q, 8A, B3), 1.8 S	NE/PM/JN	056103419A	8.0	12.06	36.5	G	B
8054.701	IN-EX	80 (89, 89Q, 8A, B3), 1.8 S	SF	056103419A	8.0	12.06	36.5	G	B
8054.701	IN-EX	80 (89, 89Q, 8A, B3), 1.8 S quattr	NE/PM/JN	056103419A	8.0	12.06	36.5	G	B
8054.701	IN-EX	80 (89, 89Q, 8A, B3), 1.8 S quattr	SF	056103419A	8.0	12.06	36.5	G	B
8054.701	IN-EX	80 (89, 89Q, 8A, B3), 1.9 D	1Y	056103419A	8.0	12.06	36.5	G	B
8054.701	IN-EX	80 (89, 89Q, 8A, B3), 2.0	AAD	056103419A	8.0	12.06	36.5	G	B
8054.701	IN-EX	80 (89, 89Q, 8A, B3), 2.0 E	3A	056103419A	8.0	12.06	36.5	G	B
8054.701	IN-EX	80 (89, 89Q, 8A, B3), 2.0 E quattr	3A	056103419A	8.0	12.06	36.5	G	B
8054.701	IN-EX	80 (89, 89Q, 8A, B3), 2.0 quattro	3A	056103419A	8.0	12.06	36.5	G	B
8054.701	IN-EX	80 (89, 89Q, 8A, B3), 2.0 quattro	AAD	056103419A	8.0	12.06	36.5	G	B
8054.701	IN-EX	80 (8C, B4), 1.6	ABM	056103419A	8.0	12.06	36.5	G	B
8054.701	IN-EX	80 (8C, B4), 1.6 E	ADA	056103419A	8.0	12.06	36.5	G	B
8054.701	IN-EX	80 (8C, B4), 1.9 TD	AAZ	056103419A	8.0	12.06	36.5	G	B
8054.701	IN-EX	80 (8C, B4), 1.9 TDI	1Z	056103419A	8.0	12.06	36.5	G	B

(D1) Internal diameter, (D2) External diameter, (B) Shape, (C) Material

VALVE GUIDES

IVT Ref.	Type	Model	Engine	OEM Ref.	D1	D2	Length	B	C
AUDI									
8054.701	IN-EX	80 (8C, B4), 2.0	ABT	056103419A	8.0	12.06	36.5	G	B
8054.701	IN-EX	80 (8C, B4), 2.0 E	ABK	056103419A	8.0	12.06	36.5	G	B
8054.701	IN-EX	80 (8C, B4), 2.0 E quattro	ABK	056103419A	8.0	12.06	36.5	G	B
8054.701	IN-EX	80 (8C, B4), 2.3 E	NG	056103419A	8.0	12.06	36.5	G	B
8054.701	IN-EX	80 (8C, B4), 2.3 E quattro	NG	056103419A	8.0	12.06	36.5	G	B
8054.701	IN-EX	80 (8C, B4), 2.6	ABC	056103419A	8.0	12.06	36.5	G	B
8054.701	IN-EX	80 (8C, B4), 2.6 quattro	ABC	056103419A	8.0	12.06	36.5	G	B
8054.701	IN-EX	80 (8C, B4), 2.8	AAH	056103419A	8.0	12.06	36.5	G	B
8054.701	IN-EX	80 (8C, B4), 2.8 quattro	AAH	056103419A	8.0	12.06	36.5	G	B
8054.701	IN-EX	80 Avant (8C, B4), 1.6 E	ADA	056103419A	8.0	12.06	36.5	G	B
8054.701	IN-EX	80 Avant (8C, B4), 1.9 TD	AAZ	056103419A	8.0	12.06	36.5	G	B
8054.701	IN-EX	80 Avant (8C, B4), 1.9 TDI	1Z	056103419A	8.0	12.06	36.5	G	B
8054.701	IN-EX	80 Avant (8C, B4), 2.0	ABT	056103419A	8.0	12.06	36.5	G	B
8054.701	IN-EX	80 Avant (8C, B4), 2.0 E	ABK	056103419A	8.0	12.06	36.5	G	B
8054.701	IN-EX	80 Avant (8C, B4), 2.3 E	NG	056103419A	8.0	12.06	36.5	G	B
8054.701	IN-EX	80 Avant (8C, B4), 2.3 E quattro	NG	056103419A	8.0	12.06	36.5	G	B
8052.701	IN-EX	80 Avant (8C, B4), 2.6	ABC	0371034188	7.0	12.06	36.4	G	B
8054.701	IN-EX	80 Avant (8C, B4), 2.6	ABC	056103419A	8.0	12.06	36.5	G	B
8052.701	IN-EX	80 Avant (8C, B4), 2.6 quattro	ABC	0371034188	7.0	12.06	36.4	G	B
8054.701	IN-EX	80 Avant (8C, B4), 2.6 quattro	ABC	056103419A	8.0	12.06	36.5	G	B
8052.701	IN-EX	80 Avant (8C, B4), 2.8	AAH	0371034188	7.0	12.06	36.4	G	B
8054.701	IN-EX	80 Avant (8C, B4), 2.8	AAH	056103419A	8.0	12.06	36.5	G	B
8052.701	IN-EX	80 Avant (8C, B4), 2.8 quattro	AAH	0371034188	7.0	12.06	36.4	G	B
8054.701	IN-EX	80 Avant (8C, B4), 2.8 quattro	AAH	056103419A	8.0	12.06	36.5	G	B
8071.701	IN-EX	80 CC / CD	***** 1595 ccm	049103419	8.0	12.06	42.3	G	B
8071.701	IN-EX	80 CC / CD / Coupé	***** 1781 ccm	049103419	8.0	12.06	42.3	G	B
8071.701	IN-EX	80 CD	***** 1921 ccm	049103419	8.0	12.06	42.3	G	B
8071.701	IN-EX	80 CL / GL / Formel E	***** 1781 ccm	049103419	8.0	12.06	42.3	G	B
8071.701	IN-EX	80 Coupé GT 5 S /CD 5 E / 5 S	***** 1921 ccm	049103419	8.0	12.06	42.3	G	B
8071.701	IN-EX	80 Coupé Quattro	***** 2144 ccm	049103419	8.0	12.06	42.3	G	B
8071.701	IN-EX	80 GT 5 E	***** 2144 ccm	049103419	8.0	12.06	42.3	G	B
8071.701	IN-EX	80 Quattro	***** 1781 ccm	049103419	8.0	12.06	42.3	G	B
8078.601	IN-EX	80 Quattro	***** 1994 ccm	027103415	7.0	12.06	38.0	F	B
8064.701	IN-EX	80 Quattro	***** 1994 ccm	027103419	7.0	12.06	38.0	G	B
8071.701	IN-EX	80 Quattro	***** 2144 ccm	049103419	8.0	12.06	42.3	G	B
8078.601	IN-EX	80 Quattro Coupé 16V	6 A 16V	027103415	7.0	12.06	38.0	F	B
8064.701	IN-EX	80 Quattro Coupé 16V	6 A 16V	027103419	7.0	12.06	38.0	G	B
8054.701	IN-EX	90 (81, 85, B2), 2.0	JS/HP	056103419A	8.0	12.06	36.5	G	B
8054.701	IN-EX	90 (81, 85, B2), 2.2	KV/HY	056103419A	8.0	12.06	36.5	G	B
8054.701	IN-EX	90 (81, 85, B2), 2.2	KX	056103419A	8.0	12.06	36.5	G	B
8054.701	IN-EX	90 (81, 85, B2), 2.2 E quattro	JT	056103419A	8.0	12.06	36.5	G	B
8054.701	IN-EX	90 (81, 85, B2), 2.2 E quattro	KV	056103419A	8.0	12.06	36.5	G	B
8054.701	IN-EX	90 (89, 89Q, 8A, B3), 1.6 TD	RA/SB	056103419A	8.0	12.06	36.5	G	B
8054.701	IN-EX	90 (89, 89Q, 8A, B3), 2.0	PS	056103419A	8.0	12.06	36.5	G	B
8054.701	IN-EX	90 (89, 89Q, 8A, B3), 2.2 E	KV	056103419A	8.0	12.06	36.5	G	B
8054.701	IN-EX	90 (89, 89Q, 8A, B3), 2.2 E quattr	KV	056103419A	8.0	12.06	36.5	G	B
8054.701	IN-EX	90 (89, 89Q, 8A, B3), 2.3 E	NG	056103419A	8.0	12.06	36.5	G	B
8054.701	IN-EX	90 (89, 89Q, 8A, B3), 2.3 E	NG	056103419A	8.0	12.06	36.5	G	B
8054.701	IN-EX	90 (89, 89Q, 8A, B3), 2.3 E quattr	NG	056103419A	8.0	12.06	36.5	G	B
8054.701	IN-EX	90 (89, 89Q, 8A, B3), 2.3 E quattr	NG	056103419A	8.0	12.06	36.5	G	B
8078.601	IN-EX	90 / 90 Quattro 20V	***** 2309 ccm	027103415	7.0	12.06	38.0	F	B
8064.701	IN-EX	90 / 90 Quattro 20V	***** 2309 ccm	027103419	7.0	12.06	38.0	G	B
8078.601	IN-EX	90 / Quattro / Quattro 20V	***** 1994 ccm	027103415	7.0	12.06	38.0	F	B
8064.701	IN-EX	90 / Quattro / Quattro 20V	***** 1994 ccm	027103419	7.0	12.06	38.0	G	B
8078.601	IN-EX	90 20V	***** 1994 ccm	027103415	7.0	12.06	38.0	F	B
8064.701	IN-EX	90 20V	***** 1994 ccm	027103419	7.0	12.06	38.0	G	B
8078.601	IN-EX	90 E	***** 2309 ccm	027103415	7.0	12.06	38.0	F	B
8064.701	IN-EX	90 E	***** 2309 ccm	027103419	7.0	12.06	38.0	G	B
8071.701	IN-EX	90 E / Coupé GT	***** 1994 ccm	049103419	8.0	12.06	42.3	G	B
8078.601	IN-EX	90 E Quattro	***** 2309 ccm	027103415	7.0	12.06	38.0	F	B
8064.701	IN-EX	90 E Quattro	***** 2309 ccm	027103419	7.0	12.06	38.0	G	B
8078.601	IN-EX	90 Quattro 20V	***** 2309 ccm	027103415	7.0	12.06	38.0	F	B

(D1) Internal diameter, (D2) External diameter, (B) Shape, (C) Material

VALVE GUIDES

IVT Ref.	Type	Model	Engine	OEM Ref.	D1	D2	Length	B	C
AUDI									
8064.701	IN-EX	90 Quattro 20V	***** 2309 ccm	027103419	7.0	12.06	38.0	G	B
8052.701	IN-EX	A2 (8Z0), 1.2 TDI	ANY	0371034188	7.0	12.06	36.4	G	B
8052.701	IN-EX	A2 (8Z0), 1.4 TDI	AMF/BHC	0371034188	7.0	12.06	36.4	G	B
8052.701	IN-EX	A3 (8L1), 1.6	AKL/APF/AEH	0371034188	7.0	12.06	36.4	G	B
8037.601	IN-EX	A3 (8L1), 1.6	AVU/BFQ		6.0	12.06	36.4	F	B
8052.701	IN-EX	A3 (8L1), 1.9 TDI	AGR/ALH	0371034188	7.0	12.06	36.4	G	B
8052.701	IN-EX	A3 (8L1), 1.9 TDI	AHF/ASV	0371034188	7.0	12.06	36.4	G	B
8052.701	IN-EX	A3 (8L1), 1.9 TDI	ASZ	0371034188	7.0	12.06	36.4	G	B
8052.701	IN-EX	A3 (8L1), 1.9 TDI	AXR/ATD	0371034188	7.0	12.06	36.4	G	B
8052.701	IN-EX	A3 (8L1), 1.9 TDI quattro	ASZ	0371034188	7.0	12.06	36.4	G	B
8037.601	IN-EX	A3 (8P1), 1.6	BGU/BSF/BSE		6.0	12.06	36.4	F	B
8052.701	IN-EX	A3 (8P1), 1.9 TDI	BXE/BKC/BLS	0371034188	7.0	12.06	36.4	G	B
8170.601	IN-EX	A3 (8P1), 2.0 TDI	BMM		6.0	10.06	42.0	F	B
8170.601	IN-EX	A3 (8P1), 2.0 TDI	BMN/CFGB/CBBB		6.0	10.06	42.0	F	B
8170.601	IN-EX	A3 (8P1), 2.0 TDI	CBAA/CFFA/AZV		6.0	10.06	42.0	F	B
8170.601	IN-EX	A3 (8P1), 2.0 TDI 16V	CFFB/CLJA/CBAB/BKD		6.0	10.06	42.0	F	B
8170.601	IN-EX	A3 (8P1), 2.0 TDI 16V quattro	CFFB/CBAB/BKD		6.0	10.06	42.0	F	B
8170.601	IN-EX	A3 (8P1), 2.0 TDI quattro	AZV		6.0	10.06	42.0	F	B
8170.601	IN-EX	A3 (8P1), 2.0 TDI quattro	BMM		6.0	10.06	42.0	F	B
8170.601	IN-EX	A3 (8P1), 2.0 TDI quattro	BMN/CFGB/CBBB		6.0	10.06	42.0	F	B
8170.601	IN-EX	A3 (8V1), 2.0 TDI	CRBD/CRLC		6.0	10.06	42.0	F	B
8170.601	IN-EX	A3 (8V1), 2.0 TDI	CRFA		6.0	10.06	42.0	F	B
8170.601	IN-EX	A3 (8V1), 2.0 TDI	CRFC		6.0	10.06	42.0	F	B
8170.601	IN-EX	A3 (8V1), 2.0 TDI	CRLB/CRBC/CRUA		6.0	10.06	42.0	F	B
8170.601	IN-EX	A3 (8V1), 2.0 TDI	CUNA		6.0	10.06	42.0	F	B
8170.601	IN-EX	A3 (8V1), 2.0 TDI quattro	CRBC		6.0	10.06	42.0	F	B
8170.601	IN-EX	A3 (8V1), 2.0 TDI quattro	CUNA		6.0	10.06	42.0	F	B
8037.601	IN-EX	A3 Cabriolet (8P7), 1.6	BSE		6.0	12.06	36.4	F	B
8052.701	IN-EX	A3 Cabriolet (8P7), 1.9 TDI	BLS	0371034188	7.0	12.06	36.4	G	B
8170.601	IN-EX	A3 Cabriolet (8V7), 2.0 TDI	CRLB		6.0	10.06	42.0	F	B
8170.601	IN-EX	A3 Cabriolet (8V7), 2.0 TDI	CRLC		6.0	10.06	42.0	F	B
8170.601	IN-EX	A3 Cabriolet (8V7), 2.0 TDI	CUNA		6.0	10.06	42.0	F	B
8170.601	IN-EX	A3 Cabriolet (8V7), 2.0 TDI quattr	CRLB		6.0	10.06	42.0	F	B
8170.601	IN-EX	A3 Cabriolet (8V7), 2.0 TDI quattr	CUNA		6.0	10.06	42.0	F	B
8170.601	IN-EX	A3 Limousine (8VS), 2.0 TDI	CRBD/CRLC		6.0	10.06	42.0	F	B
8170.601	IN-EX	A3 Limousine (8VS), 2.0 TDI	CRFA		6.0	10.06	42.0	F	B
8170.601	IN-EX	A3 Limousine (8VS), 2.0 TDI	CRFC		6.0	10.06	42.0	F	B
8170.601	IN-EX	A3 Limousine (8VS), 2.0 TDI	CRLB/CRBC/CRUA		6.0	10.06	42.0	F	B
8170.601	IN-EX	A3 Limousine (8VS), 2.0 TDI	CUNA		6.0	10.06	42.0	F	B
8170.601	IN-EX	A3 Limousine (8VS), 2.0 TDI quatt	CRLB/CRBC		6.0	10.06	42.0	F	B
8170.601	IN-EX	A3 Limousine (8VS), 2.0 TDI quatt	CUNA		6.0	10.06	42.0	F	B
8037.601	IN-EX	A3 Sportback (8PA), 1.6	BGU/BSF/BSE		6.0	12.06	36.4	F	B
8052.701	IN-EX	A3 Sportback (8PA), 1.9 TDI	BXE/BKC/BLS	0371034188	7.0	12.06	36.4	G	B
8170.601	IN-EX	A3 Sportback (8PA), 2.0 TDI	BMM		6.0	10.06	42.0	F	B
8170.601	IN-EX	A3 Sportback (8PA), 2.0 TDI	BMN/CFGB/CBBB		6.0	10.06	42.0	F	B
8170.601	IN-EX	A3 Sportback (8PA), 2.0 TDI 16V	CFFB/CLJA/CBAB/BKD		6.0	10.06	42.0	F	B
8170.601	IN-EX	A3 Sportback (8PA), 2.0 TDI 16V	CFFB/CBAB/BKD		6.0	10.06	42.0	F	B
8170.601	IN-EX	A3 Sportback (8PA), 2.0 TDI quatt	BMM		6.0	10.06	42.0	F	B
8170.601	IN-EX	A3 Sportback (8PA), 2.0 TDI quatt	BMN/CFGB/CBBB		6.0	10.06	42.0	F	B
8170.601	IN-EX	A3 Sportback (8VA), 2.0 TDI	CRBD/CRLC		6.0	10.06	42.0	F	B
8170.601	IN-EX	A3 Sportback (8VA), 2.0 TDI	CRFA		6.0	10.06	42.0	F	B
8170.601	IN-EX	A3 Sportback (8VA), 2.0 TDI	CRFC		6.0	10.06	42.0	F	B
8170.601	IN-EX	A3 Sportback (8VA), 2.0 TDI	CRLB/CRBC/CRUA		6.0	10.06	42.0	F	B
8170.601	IN-EX	A3 Sportback (8VA), 2.0 TDI	CUNA		6.0	10.06	42.0	F	B
8170.601	IN-EX	A3 Sportback (8VA), 2.0 TDI quatt	CRLB/CRBC		6.0	10.06	42.0	F	B
8170.601	IN-EX	A3 Sportback (8VA), 2.0 TDI quatt	CUNA		6.0	10.06	42.0	F	B
8052.701	IN-EX	A4 (8D2, B5), 1.6	AHL/ADP/ARM/ANA	0371034188	7.0	12.06	36.4	G	B
8037.601	IN-EX	A4 (8D2, B5), 1.6	ALZ		6.0	12.06	36.4	F	B
8052.701	IN-EX	A4 (8D2, B5), 1.9 TDI	1Z/AHU/AHH	0371034188	7.0	12.06	36.4	G	B
8052.701	IN-EX	A4 (8D2, B5), 1.9 TDI	AFF	0371034188	7.0	12.06	36.4	G	B
8052.701	IN-EX	A4 (8D2, B5), 1.9 TDI	AVG/AFN	0371034188	7.0	12.06	36.4	G	B
8052.701	IN-EX	A4 (8D2, B5), 1.9 TDI quattro	AVG/AFN	0371034188	7.0	12.06	36.4	G	B

(D1) Internal diameter, (D2) External diameter, (B) Shape, (C) Material

VALVE GUIDES

IVT Ref.	Type	Model	Engine	OEM Ref.	D1	D2	Length	B	C
AUDI									
8170.601	IN-EX	A4 (8D2, B5), 2.5 TDI	AFB/AKN		6.0	10.06	42.0	F	B
8170.601	IN-EX	A4 (8D2, B5), 2.5 TDI quattro	AFB/AKN		6.0	10.06	42.0	F	B
8052.701	IN-EX	A4 (8D2, B5), 2.6	ABC	0371034188	7.0	12.06	36.4	G	B
8052.701	IN-EX	A4 (8D2, B5), 2.6 quattro	ABC	0371034188	7.0	12.06	36.4	G	B
8052.701	IN-EX	A4 (8D2, B5), 2.8	AAH	0371034188	7.0	12.06	36.4	G	B
8052.701	IN-EX	A4 (8D2, B5), 2.8 quattro	AAH	0371034188	7.0	12.06	36.4	G	B
8037.601	IN-EX	A4 (8E2, B6), 1.6	ALZ		6.0	12.06	36.4	F	B
8052.701	IN-EX	A4 (8E2, B6), 1.9 TDI	AVB	0371034188	7.0	12.06	36.4	G	B
8052.701	IN-EX	A4 (8E2, B6), 1.9 TDI	AWX/AVF	0371034188	7.0	12.06	36.4	G	B
8052.701	IN-EX	A4 (8E2, B6), 1.9 TDI quattro	AVF	0371034188	7.0	12.06	36.4	G	B
8170.601	IN-EX	A4 (8E2, B6), 2.5 TDI	AYM		6.0	10.06	42.0	F	B
8128.601	IN-EX	A4 (8E2, B6), 2.5 TDI	BCZ/BDG/BFC		6.0	10.06	36.0	F	B
8128.601	IN-EX	A4 (8E2, B6), 2.5 TDI quattro	BAU/AKE/BDH		6.0	10.06	36.0	F	B
8037.601	IN-EX	A4 (8EC, B7), 1.6	ALZ		6.0	12.06	36.4	F	B
8170.601	IN-EX	A4 (8EC, B7), 2.0 TDI	BNA/BRF		6.0	10.06	42.0	F	B
8170.601	IN-EX	A4 (8EC, B7), 2.0 TDI	BPW		6.0	10.06	42.0	F	B
8170.601	IN-EX	A4 (8EC, B7), 2.0 TDI	BRD		6.0	10.06	42.0	F	B
8170.601	IN-EX	A4 (8EC, B7), 2.0 TDI	BVF		6.0	10.06	42.0	F	B
8170.601	IN-EX	A4 (8EC, B7), 2.0 TDI 16V	BLB/BRE		6.0	10.06	42.0	F	B
8170.601	IN-EX	A4 (8EC, B7), 2.0 TDI quattro	BPW		6.0	10.06	42.0	F	B
8170.601	IN-EX	A4 (8EC, B7), 2.0 TDI quattro	BRD		6.0	10.06	42.0	F	B
8128.601	IN-EX	A4 (8EC, B7), 2.5 TDI	BDG		6.0	10.06	36.0	F	B
8128.601	IN-EX	A4 (8EC, B7), 2.7 TDI	BPP		6.0	10.06	36.0	F	B
8128.601	IN-EX	A4 (8EC, B7), 3.0 TDI quattro	BKN		6.0	10.06	36.0	F	B
8170.601	IN-EX	A4 (8K2, B8), 2.0 TDI	CAGB/CSUB/CJCB		6.0	10.06	42.0	F	B
8170.601	IN-EX	A4 (8K2, B8), 2.0 TDI	CAHA		6.0	10.06	42.0	F	B
8170.601	IN-EX	A4 (8K2, B8), 2.0 TDI	CGLC/CMGB		6.0	10.06	42.0	F	B
8170.601	IN-EX	A4 (8K2, B8), 2.0 TDI	CGLD/CNHC/CAHB		6.0	10.06	42.0	F	B
8170.601	IN-EX	A4 (8K2, B8), 2.0 TDI	CJCC/CAGC		6.0	10.06	42.0	F	B
8170.601	IN-EX	A4 (8K2, B8), 2.0 TDI	CJCD/CMFB/CSUA		6.0	10.06	42.0	F	B
8170.601	IN-EX	A4 (8K2, B8), 2.0 TDI	CMEA/CJCA/CAGA/CMFA		6.0	10.06	42.0	F	B
8170.601	IN-EX	A4 (8K2, B8), 2.0 TDI	CNHA		6.0	10.06	42.0	F	B
8170.601	IN-EX	A4 (8K2, B8), 2.0 TDI quattro	CAHA		6.0	10.06	42.0	F	B
8170.601	IN-EX	A4 (8K2, B8), 2.0 TDI quattro	CGLC		6.0	10.06	42.0	F	B
8170.601	IN-EX	A4 (8K2, B8), 2.0 TDI quattro	CJCA/CAGA		6.0	10.06	42.0	F	B
8170.601	IN-EX	A4 (8K2, B8), 2.0 TDI quattro	CJCD/CSUA		6.0	10.06	42.0	F	B
8170.601	IN-EX	A4 (8K2, B8), 2.0 TDI quattro	CNHA		6.0	10.06	42.0	F	B
8170.601	IN-EX	A4 Allroad (8KH, B8), 2.0 TDI quat	CAGB/CSUB/CJCB		6.0	10.06	42.0	F	B
8170.601	IN-EX	A4 Allroad (8KH, B8), 2.0 TDI quat	CAHA		6.0	10.06	42.0	F	B
8170.601	IN-EX	A4 Allroad (8KH, B8), 2.0 TDI quat	CGLC		6.0	10.06	42.0	F	B
8170.601	IN-EX	A4 Allroad (8KH, B8), 2.0 TDI quat	CGLD/CNHC/CAHB		6.0	10.06	42.0	F	B
8170.601	IN-EX	A4 Allroad (8KH, B8), 2.0 TDI quat	CJCA/CAGA		6.0	10.06	42.0	F	B
8170.601	IN-EX	A4 Allroad (8KH, B8), 2.0 TDI quat	CJCD/CSUA		6.0	10.06	42.0	F	B
8170.601	IN-EX	A4 Allroad (8KH, B8), 2.0 TDI quat	CNHA		6.0	10.06	42.0	F	B
8052.701	IN-EX	A4 Avant (8D5, B5), 1.6	AHL/ADP/ARM/ANA	0371034188	7.0	12.06	36.4	G	B
8037.601	IN-EX	A4 Avant (8D5, B5), 1.6	ALZ		6.0	12.06	36.4	F	B
8052.701	IN-EX	A4 Avant (8D5, B5), 1.9 TDI	1Z/AHU/AHH	0371034188	7.0	12.06	36.4	G	B
8054.701	IN-EX	A4 Avant (8D5, B5), 1.9 TDI	1Z/AHU/AHH	056103419A	8.0	12.06	36.5	G	B
8052.701	IN-EX	A4 Avant (8D5, B5), 1.9 TDI	AFF	0371034188	7.0	12.06	36.4	G	B
8052.701	IN-EX	A4 Avant (8D5, B5), 1.9 TDI	AVG/AFN	0371034188	7.0	12.06	36.4	G	B
8052.701	IN-EX	A4 Avant (8D5, B5), 1.9 TDI quattr	AVG/AFN	0371034188	7.0	12.06	36.4	G	B
8170.601	IN-EX	A4 Avant (8D5, B5), 2.5 TDI	AFB/AKN		6.0	10.06	42.0	F	B
8170.601	IN-EX	A4 Avant (8D5, B5), 2.5 TDI quattr	AFB/AKN		6.0	10.06	42.0	F	B
8052.701	IN-EX	A4 Avant (8D5, B5), 2.6	ABC	0371034188	7.0	12.06	36.4	G	B
8052.701	IN-EX	A4 Avant (8D5, B5), 2.6 quattro	ABC	0371034188	7.0	12.06	36.4	G	B
8052.701	IN-EX	A4 Avant (8D5, B5), 2.8	AAH	0371034188	7.0	12.06	36.4	G	B
8052.701	IN-EX	A4 Avant (8D5, B5), 2.8 quattro	AAH	0371034188	7.0	12.06	36.4	G	B
8037.601	IN-EX	A4 Avant (8E5, B6), 1.6	ALZ		6.0	12.06	36.4	F	B
8052.701	IN-EX	A4 Avant (8E5, B6), 1.9 TDI	AVB	0371034188	7.0	12.06	36.4	G	B
8052.701	IN-EX	A4 Avant (8E5, B6), 1.9 TDI	AWX/AVF	0371034188	7.0	12.06	36.4	G	B
8052.701	IN-EX	A4 Avant (8E5, B6), 1.9 TDI quattr	AVF	0371034188	7.0	12.06	36.4	G	B
8170.601	IN-EX	A4 Avant (8E5, B6), 2.5 TDI	AYM		6.0	10.06	42.0	F	B

(D1) Internal diameter, (D2) External diameter, (B) Shape, (C) Material

VALVE GUIDES

IVT Ref.	Type	Model	Engine	OEM Ref.	D1	D2	Length	B	C
AUDI									
8128.601	IN-EX	A4 Avant (8E5, B6), 2.5 TDI	BCZ/BDG/BFC		6.0	10.06	36.0	F	B
8128.601	IN-EX	A4 Avant (8E5, B6), 2.5 TDI quattr	BAU/AKE/BDH		6.0	10.06	36.0	F	B
8037.601	IN-EX	A4 Avant (8ED, B7), 1.6	ALZ		6.0	12.06	36.4	F	B
8170.601	IN-EX	A4 Avant (8ED, B7), 2.0 TDI	BNA/BRF		6.0	10.06	42.0	F	B
8170.601	IN-EX	A4 Avant (8ED, B7), 2.0 TDI	BPW		6.0	10.06	42.0	F	B
8170.601	IN-EX	A4 Avant (8ED, B7), 2.0 TDI	BRD		6.0	10.06	42.0	F	B
8170.601	IN-EX	A4 Avant (8ED, B7), 2.0 TDI	BVF		6.0	10.06	42.0	F	B
8170.601	IN-EX	A4 Avant (8ED, B7), 2.0 TDI	BVG		6.0	10.06	42.0	F	B
8170.601	IN-EX	A4 Avant (8ED, B7), 2.0 TDI 16V	BLB/BRE		6.0	10.06	42.0	F	B
8170.601	IN-EX	A4 Avant (8ED, B7), 2.0 TDI quatt	BPW		6.0	10.06	42.0	F	B
8170.601	IN-EX	A4 Avant (8ED, B7), 2.0 TDI quatt	BRD		6.0	10.06	42.0	F	B
8128.601	IN-EX	A4 Avant (8ED, B7), 2.5 TDI	BDG		6.0	10.06	36.0	F	B
8128.601	IN-EX	A4 Avant (8ED, B7), 2.7 TDI	BPP		6.0	10.06	36.0	F	B
8128.601	IN-EX	A4 Avant (8ED, B7), 3.0 TDI quatt	BKN		6.0	10.06	36.0	F	B
8170.601	IN-EX	A4 Avant (8K5, B8), 2.0 TDI	CAGB/CSUB/CJCB		6.0	10.06	42.0	F	B
8170.601	IN-EX	A4 Avant (8K5, B8), 2.0 TDI	CAHA		6.0	10.06	42.0	F	B
8170.601	IN-EX	A4 Avant (8K5, B8), 2.0 TDI	CGLC		6.0	10.06	42.0	F	B
8170.601	IN-EX	A4 Avant (8K5, B8), 2.0 TDI	CGLD/CNHC/CAHB		6.0	10.06	42.0	F	B
8170.601	IN-EX	A4 Avant (8K5, B8), 2.0 TDI	CJCC/CAGC		6.0	10.06	42.0	F	B
8170.601	IN-EX	A4 Avant (8K5, B8), 2.0 TDI	CJCD/CMFB/CSUA		6.0	10.06	42.0	F	B
8170.601	IN-EX	A4 Avant (8K5, B8), 2.0 TDI	CMEA/CJCA/CAGA/CMFA		6.0	10.06	42.0	F	B
8170.601	IN-EX	A4 Avant (8K5, B8), 2.0 TDI	CNHA		6.0	10.06	42.0	F	B
8170.601	IN-EX	A4 Avant (8K5, B8), 2.0 TDI quattr	CAHA		6.0	10.06	42.0	F	B
8170.601	IN-EX	A4 Avant (8K5, B8), 2.0 TDI quattr	CGLC		6.0	10.06	42.0	F	B
8170.601	IN-EX	A4 Avant (8K5, B8), 2.0 TDI quattr	CJCA/CAGA		6.0	10.06	42.0	F	B
8170.601	IN-EX	A4 Avant (8K5, B8), 2.0 TDI quattr	CJCD/CSUA		6.0	10.06	42.0	F	B
8170.601	IN-EX	A4 Avant (8K5, B8), 2.0 TDI quattr	CNHA		6.0	10.06	42.0	F	B
8170.601	IN-EX	A4 Cabriolet (8H7, B6, 8HE, B7),	BPW		6.0	10.06	42.0	F	B
8170.601	IN-EX	A4 Cabriolet (8H7, B6, 8HE, B7),	BRC		6.0	10.06	42.0	F	B
8128.601	IN-EX	A4 Cabriolet (8H7, B6, 8HE, B7),	BCZ/BDG/BFC		6.0	10.06	36.0	F	B
8128.601	IN-EX	A4 Cabriolet (8H7, B6, 8HE, B7),	BPP		6.0	10.06	36.0	F	B
8128.601	IN-EX	A4 Cabriolet (8H7, B6, 8HE, B7),	BKN		6.0	10.06	36.0	F	B
8170.601	IN-EX	A5 (8T3), 2.0 TDI	CGLC		6.0	10.06	42.0	F	B
8170.601	IN-EX	A5 (8T3), 2.0 TDI	CGLD/CAHB		6.0	10.06	42.0	F	B
8170.601	IN-EX	A5 (8T3), 2.0 TDI	CNHA		6.0	10.06	42.0	F	B
8170.601	IN-EX	A5 (8T3), 2.0 TDI quattro	CGLC		6.0	10.06	42.0	F	B
8170.601	IN-EX	A5 (8T3), 2.0 TDI quattro	CNHA		6.0	10.06	42.0	F	B
8170.601	IN-EX	A5 Cabriolet (8F7), 2.0 TDI	CAHA		6.0	10.06	42.0	F	B
8170.601	IN-EX	A5 Cabriolet (8F7), 2.0 TDI	CGLC		6.0	10.06	42.0	F	B
8170.601	IN-EX	A5 Cabriolet (8F7), 2.0 TDI	CGLD/CAHB		6.0	10.06	42.0	F	B
8170.601	IN-EX	A5 Cabriolet (8F7), 2.0 TDI	CJCA		6.0	10.06	42.0	F	B
8170.601	IN-EX	A5 Cabriolet (8F7), 2.0 TDI	CJCD		6.0	10.06	42.0	F	B
8170.601	IN-EX	A5 Cabriolet (8F7), 2.0 TDI	CNHA		6.0	10.06	42.0	F	B
8170.601	IN-EX	A5 Cabriolet (8F7), 2.0 TDI quattro	CGLC		6.0	10.06	42.0	F	B
8170.601	IN-EX	A5 Cabriolet (8F7), 2.0 TDI quattro	CNHA		6.0	10.06	42.0	F	B
8170.601	IN-EX	A5 Sportback (8TA), 2.0 TDI	CAGB/CJCB		6.0	10.06	42.0	F	B
8170.601	IN-EX	A5 Sportback (8TA), 2.0 TDI	CAHA		6.0	10.06	42.0	F	B
8170.601	IN-EX	A5 Sportback (8TA), 2.0 TDI	CGLC		6.0	10.06	42.0	F	B
8170.601	IN-EX	A5 Sportback (8TA), 2.0 TDI	CGLD/CAHB		6.0	10.06	42.0	F	B
8170.601	IN-EX	A5 Sportback (8TA), 2.0 TDI	CJCD		6.0	10.06	42.0	F	B
8170.601	IN-EX	A5 Sportback (8TA), 2.0 TDI	CMEA/CJCA/CAGA/CMFA		6.0	10.06	42.0	F	B
8170.601	IN-EX	A5 Sportback (8TA), 2.0 TDI	CNHA		6.0	10.06	42.0	F	B
8170.601	IN-EX	A5 Sportback (8TA), 2.0 TDI quatt	CAHA		6.0	10.06	42.0	F	B
8170.601	IN-EX	A5 Sportback (8TA), 2.0 TDI quatt	CGLC		6.0	10.06	42.0	F	B
8170.601	IN-EX	A5 Sportback (8TA), 2.0 TDI quatt	CNHA		6.0	10.06	42.0	F	B
8052.701	IN-EX	A6 (4A, C4), 1.9 TDI	1Z/AHU	0371034188	7.0	12.06	36.4	G	B
8054.701	IN-EX	A6 (4A, C4), 1.9 TDI	1Z/AHU	056103419A	8.0	12.06	36.5	G	B
8054.701	IN-EX	A6 (4A, C4), 2.0	AAE	056103419A	8.0	12.06	36.5	G	B
8054.701	IN-EX	A6 (4A, C4), 2.0	ABK	056103419A	8.0	12.06	36.5	G	B
8054.701	IN-EX	A6 (4A, C4), 2.3	AAR	056103419A	8.0	12.06	36.5	G	B
8054.701	IN-EX	A6 (4A, C4), 2.3 quattro	AAR	056103419A	8.0	12.06	36.5	G	B
8054.701	IN-EX	A6 (4A, C4), 2.5 TDI	AAT	056103419A	8.0	12.06	36.5	G	B

(D1) Internal diameter, (D2) External diameter, (B) Shape, (C) Material

VALVE GUIDES

IVT Ref.	Type	Model	Engine	OEM Ref.	D1	D2	Length	B	C
AUDI									
8054.701	IN-EX	A6 (4A, C4), 2.5 TDI	AAT	056103419A	8.0	12.06	36.5	G	B
8054.701	IN-EX	A6 (4A, C4), 2.5 TDI	AEL	056103419A	8.0	12.06	36.5	G	B
8054.701	IN-EX	A6 (4A, C4), 2.5 TDI quattro	AEL	056103419A	8.0	12.06	36.5	G	B
8052.701	IN-EX	A6 (4A, C4), 2.6	ABC	0371034188	7.0	12.06	36.4	G	B
8054.701	IN-EX	A6 (4A, C4), 2.6	ABC	056103419A	8.0	12.06	36.5	G	B
8052.701	IN-EX	A6 (4A, C4), 2.6 quattro	ABC	0371034188	7.0	12.06	36.4	G	B
8054.701	IN-EX	A6 (4A, C4), 2.6 quattro	ABC	056103419A	8.0	12.06	36.5	G	B
8052.701	IN-EX	A6 (4A, C4), 2.8	AEJ/AAH/AFC	0371034188	7.0	12.06	36.4	G	B
8054.701	IN-EX	A6 (4A, C4), 2.8	AEJ/AAH/AFC	056103419A	8.0	12.06	36.5	G	B
8052.701	IN-EX	A6 (4A, C4), 2.8 quattro	AEJ/AAH	0371034188	7.0	12.06	36.4	G	B
8054.701	IN-EX	A6 (4A, C4), 2.8 quattro	AEJ/AAH	056103419A	8.0	12.06	36.5	G	B
8052.701	IN-EX	A6 (4B2, C5), 1.9 TDI	AVG/AFN	0371034188	7.0	12.06	36.4	G	B
8052.701	IN-EX	A6 (4B2, C5), 1.9 TDI	AWX/AVF	0371034188	7.0	12.06	36.4	G	B
8170.601	IN-EX	A6 (4B2, C5), 2.5 TDI	AFB/AKN		6.0	10.06	42.0	F	B
8170.601	IN-EX	A6 (4B2, C5), 2.5 TDI	AYM		6.0	10.06	42.0	F	B
8128.601	IN-EX	A6 (4B2, C5), 2.5 TDI	BAU/AKE/BND/BDH		6.0	10.06	36.0	F	B
8128.601	IN-EX	A6 (4B2, C5), 2.5 TDI	BCZ/BDG/BFC		6.0	10.06	36.0	F	B
8170.601	IN-EX	A6 (4B2, C5), 2.5 TDI quattro	AFB/AKN		6.0	10.06	42.0	F	B
8128.601	IN-EX	A6 (4B2, C5), 2.5 TDI quattro	BAU/AKE/BDH		6.0	10.06	36.0	F	B
8170.601	IN-EX	A6 (4F2, C6), 2.0 TDI	BLB/BRE		6.0	10.06	42.0	F	B
8170.601	IN-EX	A6 (4F2, C6), 2.0 TDI	CAGB/BNA/BRF		6.0	10.06	42.0	F	B
8170.601	IN-EX	A6 (4F2, C6), 2.0 TDI	CAHA		6.0	10.06	42.0	F	B
8128.601	IN-EX	A6 (4F2, C6), 2.7 TDI	BPP		6.0	10.06	36.0	F	B
8128.601	IN-EX	A6 (4F2, C6), 2.7 TDI	CANB/BSG		6.0	10.06	36.0	F	B
8128.601	IN-EX	A6 (4F2, C6), 2.7 TDI quattro	BPP		6.0	10.06	36.0	F	B
8128.601	IN-EX	A6 (4F2, C6), 2.7 TDI quattro	CAND/BSG		6.0	10.06	36.0	F	B
8128.601	IN-EX	A6 (4F2, C6), 3.0 TDI quattro	BMK		6.0	10.06	36.0	F	B
8128.601	IN-EX	A6 (4F2, C6), 3.0 TDI quattro	BNG/CDYB		6.0	10.06	36.0	F	B
8170.601	IN-EX	A6 (4G2, C7, 4GC), 2.0 TDI	CGLC/CMGB		6.0	10.06	42.0	F	B
8170.601	IN-EX	A6 (4G2, C7, 4GC), 2.0 TDI	CGLD		6.0	10.06	42.0	F	B
8170.601	IN-EX	A6 (4G2, C7, 4GC), 2.0 TDI	CZJA/CNHA		6.0	10.06	42.0	F	B
8170.601	IN-EX	A6 (4G2, C7, 4GC), 2.0 TDI quattr	CNHA		6.0	10.06	42.0	F	B
8004.601	IN-EX	A6 3.7 40V	AQG	058103415	6.0	11.06	35.9	F	B
8004.601	IN-EX	A6 3.7 40V	AQG	058103415A	6.0	11.06	35.9	F	B
8004.601	IN-EX	A6 3.7 40V	AQG	058103415B	6.0	11.06	35.9	F	B
8004.601	IN-EX	A6 4.2 40V	ARS	058103415	6.0	11.06	35.9	F	B
8004.601	IN-EX	A6 4.2 40V	ARS	058103415A	6.0	11.06	35.9	F	B
8004.601	IN-EX	A6 4.2 40V	ARS	058103415B	6.0	11.06	35.9	F	B
8004.601	IN-EX	A6 4.2 40V	ASG	058103415	6.0	11.06	35.9	F	B
8004.601	IN-EX	A6 4.2 40V	ASG	058103415A	6.0	11.06	35.9	F	B
8004.601	IN-EX	A6 4.2 40V	ASG	058103415B	6.0	11.06	35.9	F	B
8004.601	IN-EX	A6 4.2 40V	AWN	058103415	6.0	11.06	35.9	F	B
8004.601	IN-EX	A6 4.2 40V	AWN	058103415A	6.0	11.06	35.9	F	B
8004.601	IN-EX	A6 4.2 40V	AWN	058103415B	6.0	11.06	35.9	F	B
8128.601	IN-EX	A6 Allroad (4FH, C6), 2.7 TDI quat	BPP		6.0	10.06	36.0	F	B
8128.601	IN-EX	A6 Allroad (4FH, C6), 2.7 TDI quat	CAND/BSG		6.0	10.06	36.0	F	B
8128.601	IN-EX	A6 Allroad (4FH, C6), 3.0 TDI quat	BNG/CDYB		6.0	10.06	36.0	F	B
8052.701	IN-EX	A6 Avant (4A, C4), 1.9 TDI	1Z/AHU	0371034188	7.0	12.06	36.4	G	B
8054.701	IN-EX	A6 Avant (4A, C4), 1.9 TDI	1Z/AHU	056103419A	8.0	12.06	36.5	G	B
8054.701	IN-EX	A6 Avant (4A, C4), 2.0	AAE	056103419A	8.0	12.06	36.5	G	B
8054.701	IN-EX	A6 Avant (4A, C4), 2.0	ABK	056103419A	8.0	12.06	36.5	G	B
8054.701	IN-EX	A6 Avant (4A, C4), 2.3	AAR	056103419A	8.0	12.06	36.5	G	B
8054.701	IN-EX	A6 Avant (4A, C4), 2.3 quattro	AAR	056103419A	8.0	12.06	36.5	G	B
8054.701	IN-EX	A6 Avant (4A, C4), 2.5 TDI	AAT	056103419A	8.0	12.06	36.5	G	B
8054.701	IN-EX	A6 Avant (4A, C4), 2.5 TDI	AAT	056103419A	8.0	12.06	36.5	G	B
8054.701	IN-EX	A6 Avant (4A, C4), 2.5 TDI	AEL	056103419A	8.0	12.06	36.5	G	B
8054.701	IN-EX	A6 Avant (4A, C4), 2.5 TDI quattro	AEL	056103419A	8.0	12.06	36.5	G	B
8052.701	IN-EX	A6 Avant (4A, C4), 2.6	ABC	0371034188	7.0	12.06	36.4	G	B
8054.701	IN-EX	A6 Avant (4A, C4), 2.6	ABC	056103419A	8.0	12.06	36.5	G	B
8052.701	IN-EX	A6 Avant (4A, C4), 2.6 quattro	ABC	0371034188	7.0	12.06	36.4	G	B
8054.701	IN-EX	A6 Avant (4A, C4), 2.6 quattro	ABC	056103419A	8.0	12.06	36.5	G	B
8052.701	IN-EX	A6 Avant (4A, C4), 2.8	AEJ/AAH	0371034188	7.0	12.06	36.4	G	B

(D1) Internal diameter, (D2) External diameter, (B) Shape, (C) Material

VALVE GUIDES

IVT Ref.	Type	Model	Engine	OEM Ref.	D1	D2	Length	B	C
AUDI									
8054.701	IN-EX	A6 Avant (4A, C4), 2.8	AEJ/AAH	056103419A	8.0	12.06	36.5	G	B
8052.701	IN-EX	A6 Avant (4A, C4), 2.8 quattro	AEJ/AAH	0371034188	7.0	12.06	36.4	G	B
8054.701	IN-EX	A6 Avant (4A, C4), 2.8 quattro	AEJ/AAH	056103419A	8.0	12.06	36.5	G	B
8052.701	IN-EX	A6 Avant (4B5, C5), 1.9 TDI	AFN	0371034188	7.0	12.06	36.4	G	B
8052.701	IN-EX	A6 Avant (4B5, C5), 1.9 TDI	AWX/AVF	0371034188	7.0	12.06	36.4	G	B
8170.601	IN-EX	A6 Avant (4B5, C5), 2.5 TDI	AFB/AKN		6.0	10.06	42.0	F	B
8170.601	IN-EX	A6 Avant (4B5, C5), 2.5 TDI	AYM		6.0	10.06	42.0	F	B
8128.601	IN-EX	A6 Avant (4B5, C5), 2.5 TDI	BAU/AKE/BDH		6.0	10.06	36.0	F	B
8128.601	IN-EX	A6 Avant (4B5, C5), 2.5 TDI	BCZ/BDG/BFC		6.0	10.06	36.0	F	B
8170.601	IN-EX	A6 Avant (4B5, C5), 2.5 TDI quattr	AFB/AKN		6.0	10.06	42.0	F	B
8128.601	IN-EX	A6 Avant (4B5, C5), 2.5 TDI quattr	BAU/AKE/BDH		6.0	10.06	36.0	F	B
8170.601	IN-EX	A6 Avant (4F5, C6), 2.0 TDI	BLB/BRE		6.0	10.06	42.0	F	B
8170.601	IN-EX	A6 Avant (4F5, C6), 2.0 TDI	BVG		6.0	10.06	42.0	F	B
8170.601	IN-EX	A6 Avant (4F5, C6), 2.0 TDI	CAGB/BNA/BRF		6.0	10.06	42.0	F	B
8170.601	IN-EX	A6 Avant (4F5, C6), 2.0 TDI	CAHA		6.0	10.06	42.0	F	B
8128.601	IN-EX	A6 Avant (4F5, C6), 2.7 TDI	BPP		6.0	10.06	36.0	F	B
8128.601	IN-EX	A6 Avant (4F5, C6), 2.7 TDI	CANB/BSG		6.0	10.06	36.0	F	B
8128.601	IN-EX	A6 Avant (4F5, C6), 2.7 TDI quattr	BPP		6.0	10.06	36.0	F	B
8128.601	IN-EX	A6 Avant (4F5, C6), 2.7 TDI quattr	CAND/BSG		6.0	10.06	36.0	F	B
8128.601	IN-EX	A6 Avant (4F5, C6), 3.0 TDI quattr	BMK		6.0	10.06	36.0	F	B
8128.601	IN-EX	A6 Avant (4F5, C6), 3.0 TDI quattr	BNG/CDYB		6.0	10.06	36.0	F	B
8170.601	IN-EX	A6 Avant (4G5, C7, 4GD), 2.0 TDI	CGLC/CMGB		6.0	10.06	42.0	F	B
8170.601	IN-EX	A6 Avant (4G5, C7, 4GD), 2.0 TDI	CGLD		6.0	10.06	42.0	F	B
8170.601	IN-EX	A6 Avant (4G5, C7, 4GD), 2.0 TDI	CZJA/CNHA		6.0	10.06	42.0	F	B
8170.601	IN-EX	A6 Avant (4G5, C7, 4GD), 2.0 TDI	CNHA		6.0	10.06	42.0	F	B
8004.601	IN-EX	A6 Avant 3.7 40V	AQG	058103415	6.0	11.06	35.9	F	B
8004.601	IN-EX	A6 Avant 3.7 40V	AQG	058103415A	6.0	11.06	35.9	F	B
8004.601	IN-EX	A6 Avant 3.7 40V	AQG	058103415B	6.0	11.06	35.9	F	B
8004.601	IN-EX	A6 Avant 4.2 40V	ARS	058103415	6.0	11.06	35.9	F	B
8004.601	IN-EX	A6 Avant 4.2 40V	ARS	058103415A	6.0	11.06	35.9	F	B
8004.601	IN-EX	A6 Avant 4.2 40V	ARS	058103415B	6.0	11.06	35.9	F	B
8004.601	IN-EX	A6 Avant 4.2 40V	ASG	058103415	6.0	11.06	35.9	F	B
8004.601	IN-EX	A6 Avant 4.2 40V	ASG	058103415A	6.0	11.06	35.9	F	B
8004.601	IN-EX	A6 Avant 4.2 40V	ASG	058103415B	6.0	11.06	35.9	F	B
8004.601	IN-EX	A6 Avant 4.2 40V	AWN	058103415	6.0	11.06	35.9	F	B
8004.601	IN-EX	A6 Avant 4.2 40V	AWN	058103415A	6.0	11.06	35.9	F	B
8004.601	IN-EX	A6 Avant 4.2 40V	AWN	058103415B	6.0	11.06	35.9	F	B
8004.601	IN-EX	A6 Avant Quattro 3.7 40V	AQG	058103415	6.0	11.06	35.9	F	B
8004.601	IN-EX	A6 Avant Quattro 3.7 40V	AQG	058103415A	6.0	11.06	35.9	F	B
8004.601	IN-EX	A6 Avant Quattro 3.7 40V	AQG	058103415B	6.0	11.06	35.9	F	B
8004.601	IN-EX	A6 Avant Quattro 4.2 40V	ARS	058103415	6.0	11.06	35.9	F	B
8004.601	IN-EX	A6 Avant Quattro 4.2 40V	ARS	058103415A	6.0	11.06	35.9	F	B
8004.601	IN-EX	A6 Avant Quattro 4.2 40V	ARS	058103415B	6.0	11.06	35.9	F	B
8004.601	IN-EX	A6 Avant Quattro 4.2 40V	ASG	058103415	6.0	11.06	35.9	F	B
8004.601	IN-EX	A6 Avant Quattro 4.2 40V	ASG	058103415A	6.0	11.06	35.9	F	B
8004.601	IN-EX	A6 Avant Quattro 4.2 40V	ASG	058103415B	6.0	11.06	35.9	F	B
8004.601	IN-EX	A6 Avant Quattro 4.2 40V	AWN	058103415	6.0	11.06	35.9	F	B
8004.601	IN-EX	A6 Avant Quattro 4.2 40V	AWN	058103415A	6.0	11.06	35.9	F	B
8004.601	IN-EX	A6 Avant Quattro 4.2 40V	AWN	058103415B	6.0	11.06	35.9	F	B
8170.601	IN-EX	A8 (4D2, 4D8), 2.5 TDI	AFB/AKN		6.0	10.06	42.0	F	B
8128.601	IN-EX	A8 (4D2, 4D8), 2.5 TDI	AKE		6.0	10.06	36.0	F	B
8170.601	IN-EX	A8 (4D2, 4D8), 2.5 TDI quattro	AFB/AKN		6.0	10.06	42.0	F	B
8128.601	IN-EX	A8 (4D2, 4D8), 2.5 TDI quattro	AKE		6.0	10.06	36.0	F	B
8052.701	IN-EX	A8 (4D2, 4D8), 2.8	AAH	0371034188	7.0	12.06	36.4	G	B
8054.701	IN-EX	A8 (4D2, 4D8), 2.8	AAH	056103419A	8.0	12.06	36.5	G	B
8052.701	IN-EX	A8 (4D2, 4D8), 2.8 quattro	AAH	0371034188	7.0	12.06	36.4	G	B
8054.701	IN-EX	A8 (4D2, 4D8), 2.8 quattro	AAH	056103419A	8.0	12.06	36.5	G	B
8170.601	IN-EX	A8 (4D2, 4D8), 3.3 TDI quattro	AKF		6.0	10.06	42.0	F	B
8054.701	IN-EX	A8 (4D2, 4D8), 4.2 quattro	AEM	056103419A	8.0	12.06	36.5	G	B
8128.601	IN-EX	A8 (4E_), 3.0 TDI quattro	BNG		6.0	10.06	36.0	F	B
8004.601	IN-EX	A8 3.7 40V	AQG	058103415	6.0	11.06	35.9	F	B
8004.601	IN-EX	A8 3.7 40V	AQG	058103415A	6.0	11.06	35.9	F	B

(D1) Internal diameter, (D2) External diameter, (B) Shape, (C) Material

VALVE GUIDES

IVT Ref.	Type	Model	Engine	OEM Ref.	D1	D2	Length	B	C
AUDI									
8004.601	IN-EX	A8 3.7 40V	AQG	058103415B	6.0	11.06	35.9	F	B
8004.601	IN-EX	A8 Quattro 4.2 40V	AQF	058103415	6.0	11.06	35.9	F	B
8004.601	IN-EX	A8 Quattro 4.2 40V	AQF	058103415A	6.0	11.06	35.9	F	B
8004.601	IN-EX	A8 Quattro 4.2 40V	AQF	058103415B	6.0	11.06	35.9	F	B
8004.601	IN-EX	A8 Quattro 4.2 40V	AQG	058103415	6.0	11.06	35.9	F	B
8004.601	IN-EX	A8 Quattro 4.2 40V	AQG	058103415A	6.0	11.06	35.9	F	B
8004.601	IN-EX	A8 Quattro 4.2 40V	AQG	058103415B	6.0	11.06	35.9	F	B
8004.601	IN-EX	A8 Quattro 4.2 40V	ARS	058103415	6.0	11.06	35.9	F	B
8004.601	IN-EX	A8 Quattro 4.2 40V	ARS	058103415A	6.0	11.06	35.9	F	B
8004.601	IN-EX	A8 Quattro 4.2 40V	ARS	058103415B	6.0	11.06	35.9	F	B
8128.601	IN-EX	ALLROAD (4BH, C5), 2.5 TDI qua	BAU/AKE		6.0	10.06	36.0	F	B
8128.601	IN-EX	ALLROAD (4BH, C5), 2.5 TDI qua	BCZ		6.0	10.06	36.0	F	B
8052.701	IN-EX	CABRIOLET (8G7, B4), 1.9 TDI	1Z/AHU	0371034188	7.0	12.06	36.4	G	B
8054.701	IN-EX	CABRIOLET (8G7, B4), 1.9 TDI	1Z/AHU	056103419A	8.0	12.06	36.5	G	B
8054.701	IN-EX	CABRIOLET (8G7, B4), 2.0 E	ABK	056103419A	8.0	12.06	36.5	G	B
8054.701	IN-EX	CABRIOLET (8G7, B4), 2.3 E	NG	056103419A	8.0	12.06	36.5	G	B
8052.701	IN-EX	CABRIOLET (8G7, B4), 2.6	ABC	0371034188	7.0	12.06	36.4	G	B
8054.701	IN-EX	CABRIOLET (8G7, B4), 2.6	ABC	056103419A	8.0	12.06	36.5	G	B
8052.701	IN-EX	CABRIOLET (8G7, B4), 2.8	AAH	0371034188	7.0	12.06	36.4	G	B
8054.701	IN-EX	CABRIOLET (8G7, B4), 2.8	AAH	056103419A	8.0	12.06	36.5	G	B
8054.701	IN-EX	COUPE (81, 85), 1.6	YN	056103419A	8.0	12.06	36.5	G	B
8054.701	IN-EX	COUPE (81, 85), 1.8	DD	056103419A	8.0	12.06	36.5	G	B
8054.701	IN-EX	COUPE (81, 85), 1.8 GT	DS/JV	056103419A	8.0	12.06	36.5	G	B
8054.701	IN-EX	COUPE (81, 85), 1.8 GT	DZ	056103419A	8.0	12.06	36.5	G	B
8054.701	IN-EX	COUPE (81, 85), 1.8 GT	JN	056103419A	8.0	12.06	36.5	G	B
8054.701	IN-EX	COUPE (81, 85), 1.8 GT	PV	056103419A	8.0	12.06	36.5	G	B
8054.701	IN-EX	COUPE (81, 85), 1.8 GT	SF	056103419A	8.0	12.06	36.5	G	B
8054.701	IN-EX	COUPE (81, 85), 1.8 GT quattro	DZ	056103419A	8.0	12.06	36.5	G	B
8054.701	IN-EX	COUPE (81, 85), 2.0	JS/HP	056103419A	8.0	12.06	36.5	G	B
8054.701	IN-EX	COUPE (81, 85), 2.0	SK	056103419A	8.0	12.06	36.5	G	B
8054.701	IN-EX	COUPE (81, 85), 2.2 GT	KV/HY	056103419A	8.0	12.06	36.5	G	B
8054.701	IN-EX	COUPE (81, 85), 2.2 GT	KX	056103419A	8.0	12.06	36.5	G	B
8054.701	IN-EX	COUPE (81, 85), 2.2 quattro	JT	056103419A	8.0	12.06	36.5	G	B
8054.701	IN-EX	COUPE (81, 85), 2.2 quattro	KV	056103419A	8.0	12.06	36.5	G	B
8054.701	IN-EX	COUPE (81, 85), 2.3	NG	056103419A	8.0	12.06	36.5	G	B
8054.701	IN-EX	COUPE (81, 85), 2.3 quattro	NG	056103419A	8.0	12.06	36.5	G	B
8054.701	IN-EX	COUPE (89, 8B), 1.8	DZ	056103419A	8.0	12.06	36.5	G	B
8054.701	IN-EX	COUPE (89, 8B), 2.0	3A	056103419A	8.0	12.06	36.5	G	B
8054.701	IN-EX	COUPE (89, 8B), 2.0	3A	056103419A	8.0	12.06	36.5	G	B
8054.701	IN-EX	COUPE (89, 8B), 2.0	ABK/AAD	056103419A	8.0	12.06	36.5	G	B
8054.701	IN-EX	COUPE (89, 8B), 2.2 quattro	KV	056103419A	8.0	12.06	36.5	G	B
8054.701	IN-EX	COUPE (89, 8B), 2.3	NG	056103419A	8.0	12.06	36.5	G	B
8054.701	IN-EX	COUPE (89, 8B), 2.3	NG	056103419A	8.0	12.06	36.5	G	B
8054.701	IN-EX	COUPE (89, 8B), 2.3 quattro	NG	056103419A	8.0	12.06	36.5	G	B
8054.701	IN-EX	COUPE (89, 8B), 2.3 quattro	NG	056103419A	8.0	12.06	36.5	G	B
8052.701	IN-EX	COUPE (89, 8B), 2.6	ABC	0371034188	7.0	12.06	36.4	G	B
8054.701	IN-EX	COUPE (89, 8B), 2.6	ABC	056103419A	8.0	12.06	36.5	G	B
8052.701	IN-EX	COUPE (89, 8B), 2.6 quattro	ABC	0371034188	7.0	12.06	36.4	G	B
8054.701	IN-EX	COUPE (89, 8B), 2.6 quattro	ABC	056103419A	8.0	12.06	36.5	G	B
8052.701	IN-EX	COUPE (89, 8B), 2.8	AAH	0371034188	7.0	12.06	36.4	G	B
8054.701	IN-EX	COUPE (89, 8B), 2.8	AAH	056103419A	8.0	12.06	36.5	G	B
8052.701	IN-EX	COUPE (89, 8B), 2.8 quattro	AAH	0371034188	7.0	12.06	36.4	G	B
8054.701	IN-EX	COUPE (89, 8B), 2.8 quattro	AAH	056103419A	8.0	12.06	36.5	G	B
8071.701	IN-EX	Coupé GT 5 E	No. F43-B-035.001 ->	049103419	8.0	12.06	42.3	G	B
8170.601	IN-EX	Q3 (8U), 2.0 TDI	CFFA		6.0	10.06	42.0	F	B
8170.601	IN-EX	Q3 (8U), 2.0 TDI	CFFB/CLJA		6.0	10.06	42.0	F	B
8170.601	IN-EX	Q3 (8U), 2.0 TDI	CFGC		6.0	10.06	42.0	F	B
8170.601	IN-EX	Q3 (8U), 2.0 TDI quattro	CFFB		6.0	10.06	42.0	F	B
8170.601	IN-EX	Q3 (8U), 2.0 TDI quattro	CLLB/CFGC		6.0	10.06	42.0	F	B
8170.601	IN-EX	Q5 (8R), 2.0 TDI	CJCA		6.0	10.06	42.0	F	B
8170.601	IN-EX	Q5 (8R), 2.0 TDI	CJCD/CSUA		6.0	10.06	42.0	F	B
8170.601	IN-EX	Q5 (8R), 2.0 TDI	CSUB/CJCB		6.0	10.06	42.0	F	B

(D1) Internal diameter, (D2) External diameter, (B) Shape, (C) Material

VALVE GUIDES

IVT Ref.	Type	Model	Engine	OEM Ref.	D1	D2	Length	B	C
AUDI									
8170.601	IN-EX	Q5 (8R), 2.0 TDI quattro	CAHA/CMGA/CGLB		6.0	10.06	42.0	F	B
8170.601	IN-EX	Q5 (8R), 2.0 TDI quattro	CGLA/CGLD/CNHC/CAHB		6.0	10.06	42.0	F	B
8170.601	IN-EX	Q5 (8R), 2.0 TDI quattro	CGLC/CMGB		6.0	10.06	42.0	F	B
8170.601	IN-EX	Q5 (8R), 2.0 TDI quattro	CJCA/CAGA		6.0	10.06	42.0	F	B
8170.601	IN-EX	Q5 (8R), 2.0 TDI quattro	CJCD/CSUA		6.0	10.06	42.0	F	B
8170.601	IN-EX	Q5 (8R), 2.0 TDI quattro	CNHA		6.0	10.06	42.0	F	B
8170.601	IN-EX	Q7 (4L), 3.0 TDI	CJMA/CJGC		6.0	10.06	42.0	F	B
8054.701	IN-EX	QUATTRO (85), 2.1 Turbo	WR/GV	056103419A	8.0	12.06	36.5	G	B
8054.701	IN-EX	QUATTRO (85), 2.2 20V Turbo	RR	056103419A	8.0	12.06	36.5	G	B
8054.701	IN-EX	QUATTRO (85), 2.2 Turbo	MB	056103419A	8.0	12.06	36.5	G	B
8078.601	IN-EX	S2 2.2 20V	3B 20V	027103415	7.0	12.06	38.0	F	B
8064.701	IN-EX	S2 2.2 20V	3B 20V	027103419	7.0	12.06	38.0	G	B
8078.601	IN-EX	S4 / S4 Avant 2.2 20V	AAN 20V	027103415	7.0	12.06	38.0	F	B
8064.701	IN-EX	S4 / S4 Avant 2.2 20V	AAN 20V	027103419	7.0	12.06	38.0	G	B
8170.601	IN-EX	TT (8J3), 2.0 TDI quattro	CFGB/CBBB		6.0	10.06	42.0	F	B
8170.601	IN-EX	TT (FV3), 2.0 TDI	CUNA		6.0	10.06	42.0	F	B
8170.601	IN-EX	TT Roadster (8J9), 2.0 TDI quattro	CFGB/CBBB		6.0	10.06	42.0	F	B
8170.601	IN-EX	TT Roadster (FV9), 2.0 TDI	CUNA		6.0	10.06	42.0	F	B
8078.601	IN-EX	V8 Quattro 3.6 32V	PT-ABH 32V	027103415	7.0	12.06	38.0	F	B
8064.701	IN-EX	V8 Quattro 3.6 32V	PT-ABH 32V	027103419	7.0	12.06	38.0	G	B
8078.601	IN-EX	V8 Quattro 4.2 32V	PT-ABH 32V	027103415	7.0	12.06	38.0	F	B
8064.701	IN-EX	V8 Quattro 4.2 32V	PT-ABH 32V	027103419	7.0	12.06	38.0	G	B
AUSTIN									
8124.100	IN-EX	ALLEGRO Schrägheck (ADO 67),	99 H	12G1111	7.1	11.94	43.0	A-1	G
8124.100	IN-EX	METRO, 1.0	99 H	12G1111	7.1	11.94	43.0	A-1	G
8124.100	IN-EX	METRO, 1.0	99 H	12G1111	7.1	11.94	43.0	A-1	G
8124.100	IN-EX	METRO, 1.0 Surf HLE	99 HA65P	12G1111	7.1	11.94	43.0	A-1	G
8124.100	IN-EX	METRO, 1.3 Surf (XF)	12 HC21AA	12G1111	7.1	11.94	43.0	A-1	G
8124.100	IN-EX	METRO, 1.3 Turbo	12 HA85AA	12G1111	7.1	11.94	43.0	A-1	G
8124.100	IN-EX	MINI, 1000	-	12G1111	7.1	11.94	43.0	A-1	G
8124.100	IN-EX	MINI, 1000	99 H	12G1111	7.1	11.94	43.0	A-1	G
8124.100	IN-EX	MINI, 1000 Mayfair	99 HC20P/99 HA53P/99 H99	12G1111	7.1	11.94	43.0	A-1	G
8124.100	IN-EX	MINI, 1275 GT	-	12G1111	7.1	11.94	43.0	A-1	G
8124.100	IN-EX	MINI, 850	BMC Serie A	12G1111	7.1	11.94	43.0	A-1	G
BMW									
8162.101	IN-EX	1 (E81), 120 d	N47 D20 A/N47 D20 C		6.0	11.54	39.0	A	B
8162.101	IN-EX	1 (E81), 120 d	N47 D20 A/N47 D20 C		6.0	11.54	39.0	A	B
8209.101	EX	1 (E81), 130 i	N52 B30 A/N52 B30 BF/N52		6.0	10.04	48.0	A	B
8208.101	IN	1 (E81), 130 i	N52 B30 A/N52 B30 BF/N52		5.0	10.04	42.0	A	B
8208.101	IN	1 (E81), 130 i	N52 B30 A/N52 B30 BF/N52		5.0	10.04	42.0	A	B
8209.101	EX	1 (E81), 130 i	N52 B30 A/N52 B30 BF/N52		6.0	10.04	48.0	A	B
8162.101	IN-EX	1 (E87), 118 d	N47 D20 A/M47 D20 (204D4)		6.0	11.54	39.0	A	B
8162.101	IN-EX	1 (E87), 120 d	N47 D20 A/M47 D20 (204D4)		6.0	11.54	39.0	A	B
8162.101	IN-EX	1 (E87), 120 d	N47 D20 A/M47 D20 (204D4)		6.0	11.54	39.0	A	B
8172.900	IN	1 (E87), 120 d	N47 D20 A/M47 D20 (204D4)	13212AD260	6.0	10.03	59.7	P	G1
8209.101	EX	1 (E87), 130 i	N52 B30 A/N52 B30 BF/N52		6.0	10.04	48.0	A	B
8208.101	IN	1 (E87), 130 i	N52 B30 A/N52 B30 BF/N52		5.0	10.04	42.0	A	B
8208.101	IN	1 (E87), 130 i	N52 B30 A/N52 B30 BF/N52		5.0	10.04	42.0	A	B
8209.101	EX	1 (E87), 130 i	N52 B30 A/N52 B30 BF/N52		6.0	10.04	48.0	A	B
8208.101	IN	1 Cabriolet (E88), 125 i	N52 B30 A		5.0	10.04	42.0	A	B
8209.101	EX	1 Cabriolet (E88), 125 i	N52 B30 A		6.0	10.04	48.0	A	B
8209.101	EX	1 Cabriolet (E88), 135 i	N55 B30 A/N54 B30 A		6.0	10.04	48.0	A	B
8208.101	IN	1 Cabriolet (E88), 135 i	N55 B30 A/N54 B30 A		5.0	10.04	42.0	A	B
8162.101	IN-EX	1 Coupe (E82), 120 d	N47 D20 A/N47 D20 C		6.0	11.54	39.0	A	B
8208.101	IN	1 Coupe (E82), 125 i	N52 B30 A		5.0	10.04	42.0	A	B
8209.101	EX	1 Coupe (E82), 125 i	N52 B30 A		6.0	10.04	48.0	A	B
8208.101	IN	1 Coupe (E82), 135 i	N55 B30 A/N54 B30 A		5.0	10.04	42.0	A	B
8209.101	EX	1 Coupe (E82), 135 i	N55 B30 A/N54 B30 A		6.0	10.04	48.0	A	B
8208.101	IN	1 Coupe (E82), M	N54 B30 A		5.0	10.04	42.0	A	B
8209.101	EX	1 Coupe (E82), M	N54 B30 A		6.0	10.04	48.0	A	B

(D1) Internal diameter, (D2) External diameter, (B) Shape, (C) Material

VALVE GUIDES

IVT Ref.	Type	Model	Engine	OEM Ref.	D1	D2	Length	B	C
BMW									
8213.101	IN-EX	116 d, 1 (E81)	N47 D20 A/N47 D20 C		5.0	10.02	35.5	A	B
8213.101	IN-EX	116 d, 1 (E87)	N47 D20 A		5.0	10.02	35.5	A	B
8213.101	IN-EX	116 d, 1 (F20)	N47 D20 C		5.0	10.02	35.5	A	B
8213.101	IN-EX	116 d, 1 (F21)	B37 D15 A		5.0	10.02	35.5	A	B
8213.101	IN-EX	116 d, 1 (F21)	N47 D20 C		5.0	10.02	35.5	A	B
8213.101	IN-EX	118 d xDrive, 1 (F20)	N47 D20 C		5.0	10.02	35.5	A	B
8213.101	IN-EX	118 d xDrive, 1 (F21)	N47 D20 C		5.0	10.02	35.5	A	B
8213.101	IN-EX	118 d, 1 (E81)	N47 D20 A/N47 D20 C		5.0	10.02	35.5	A	B
8213.101	IN-EX	118 d, 1 (E81)	N47 D20 A/N47 D20 C		5.0	10.02	35.5	A	B
8213.101	IN-EX	118 d, 1 (E87)	N47 D20 A/N47 D20 C		5.0	10.02	35.5	A	B
8213.101	IN-EX	118 d, 1 (E87)	N47 D20 A/N47 D20 C		5.0	10.02	35.5	A	B
8213.101	IN-EX	118 d, 1 (F20)	N47 D20 C		5.0	10.02	35.5	A	B
8213.101	IN-EX	118 d, 1 (F20)	N47 D20 C		5.0	10.02	35.5	A	B
8213.101	IN-EX	118 d, 1 (F21)	N47 D20 C		5.0	10.02	35.5	A	B
8213.101	IN-EX	118 d, 1 (F21)	N47 D20 C		5.0	10.02	35.5	A	B
8213.101	IN-EX	118 d, 1 Cabriolet (E88)	N47 D20 A/N47 D20 C		5.0	10.02	35.5	A	B
8213.101	IN-EX	118 d, 1 Coupe (E82)	N47 D20 C		5.0	10.02	35.5	A	B
8213.101	IN-EX	118 d, 1 Coupe (E82)	N47 D20 C		5.0	10.02	35.5	A	B
8213.101	IN-EX	120 d xDrive, 1 (F20)	N47 D20 C		5.0	10.02	35.5	A	B
8213.101	IN-EX	120 d xDrive, 1 (F20)	N47 D20 C		5.0	10.02	35.5	A	B
8213.101	IN-EX	120 d xDrive, 1 (F21)	N47 D20 C		5.0	10.02	35.5	A	B
8213.101	IN-EX	120 d xDrive, 1 (F21)	N47 D20 C		5.0	10.02	35.5	A	B
8213.101	IN-EX	120 d, 1 (F20)	N47 D20 C		5.0	10.02	35.5	A	B
8213.101	IN-EX	120 d, 1 (F20)	N47 D20 C		5.0	10.02	35.5	A	B
8213.101	IN-EX	120 d, 1 (F20)	N47 D20 C		5.0	10.02	35.5	A	B
8213.101	IN-EX	120 d, 1 (F21)	N47 D20 C		5.0	10.02	35.5	A	B
8213.101	IN-EX	120 d, 1 (F21)	N47 D20 C		5.0	10.02	35.5	A	B
8213.101	IN-EX	120 d, 1 (F21)	N47 D20 C		5.0	10.02	35.5	A	B
8213.101	IN-EX	120 d, 1 Cabriolet (E88)	N47 D20 A/N47 D20 C		5.0	10.02	35.5	A	B
8213.101	IN-EX	120 d, 1 Cabriolet (E88)	N47 D20 C		5.0	10.02	35.5	A	B
8213.101	IN-EX	123 d, 1 (E81)	N47 D20 B/N47 D20 D		5.0	10.02	35.5	A	B
8213.101	IN-EX	123 d, 1 (E87)	N47 D20 B/N47 D20 C/N47 D		5.0	10.02	35.5	A	B
8213.101	IN-EX	123 d, 1 Cabriolet (E88)	N47 D20 B/N47 D20 D		5.0	10.02	35.5	A	B
8213.101	IN-EX	123 d, 1 Coupe (E82)	N47 D20 B/N47 D20 D		5.0	10.02	35.5	A	B
8213.101	IN-EX	125 d, 1 (F20)	N47 D20 D		5.0	10.02	35.5	A	B
8213.101	IN-EX	125 d, 1 (F20)	N47 D20 D		5.0	10.02	35.5	A	B
8213.101	IN-EX	125 d, 1 (F21)	N47 D20 D		5.0	10.02	35.5	A	B
8213.101	IN-EX	125 d, 1 (F21)	N47 D20 D		5.0	10.02	35.5	A	B
8015.601	IN-EX	2.5 CS	125	11121263642	8.0	14.04	50.0	F	B
8015.601	IN-EX	2.5 CS	M 30 B 25 V	11121263642	8.0	14.04	50.0	F	B
8015.601	IN-EX	2.8 L	128	11121263642	8.0	14.04	50.0	F	B
8213.101	IN-EX	218 d, 2 Coupe (F22, F87)	N47 D20 C		5.0	10.02	35.5	A	B
8213.101	IN-EX	220 d, 2 Coupe (F22, F87)	N47 D20 C		5.0	10.02	35.5	A	B
8213.101	IN-EX	220 d, 2 Coupe (F22, F87)	N47 D20 C		5.0	10.02	35.5	A	B
8213.101	IN-EX	225 d, 2 Coupe (F22, F87)	N47 D20 D		5.0	10.02	35.5	A	B
8015.601	IN-EX	2500	125	11121263642	8.0	14.04	50.0	F	B
8015.601	IN-EX	2500	M 30 B 25 V	11121263642	8.0	14.04	50.0	F	B
8015.601	IN-EX	2800 / 2800 CS 2.8	128	11121263642	8.0	14.04	50.0	F	B
8022.601	IN-EX	3 (E30), 316 i	M40 B16 (164E1)	11121715373	7.0	12.55	43.5	F	B
8022.601	IN-EX	3 (E30), 316 i	M40 B16 (164E1)	11121715373	7.0	12.55	43.5	F	B
8022.601	IN-EX	3 (E30), 318 i	M40 B18 (184E1)	11121715373	7.0	12.55	43.5	F	B
8022.601	IN-EX	3 (E30), 318 i	M40 B18 (184E1)	11121715373	7.0	12.55	43.5	F	B
8022.601	IN-EX	3 (E36), 316 i	M40 B16 (164E1)	11121715373	7.0	12.55	43.5	F	B
8022.601	IN-EX	3 (E36), 316 i	M43 B16 (164E2)	11121715373	7.0	12.55	43.5	F	B
8022.601	IN-EX	3 (E36), 316 i	M43 B16 (164E2)	11121715373	7.0	12.55	43.5	F	B
8022.601	IN-EX	3 (E36), 318 i	M40 B18 (184E1)	11121715373	7.0	12.55	43.5	F	B
8022.601	IN-EX	3 (E36), 318 is	M42 B18 (184S1)	11121715373	7.0	12.55	43.5	F	B
8022.601	IN-EX	3 (E36), 320 i	M52 B20 (206S3)/M50 B20 (	11121715373	7.0	12.55	43.5	F	B
8022.601	IN-EX	3 (E46), 316 i	M43 B16 (164E3)	11121715373	7.0	12.55	43.5	F	B
8022.601	IN-EX	3 (E46), 316 i	M43 B19 (194E1)	11121715373	7.0	12.55	43.5	F	B
8162.101	IN-EX	3 (E46), 318 d	M47 D20 (204D4)		6.0	11.54	39.0	A	B
8022.601	IN-EX	3 (E46), 318 i	M43 B19 (194E1)	11121715373	7.0	12.55	43.5	F	B

(D1) Internal diameter, (D2) External diameter, (B) Shape, (C) Material

VALVE GUIDES

IVT Ref.	Type	Model	Engine	OEM Ref.	D1	D2	Length	B	C
BMW									
8162.101	IN-EX	3 (E46), 320 d	M47 D20 (204D1)		6.0	11.54	39.0	A	B
8162.101	IN-EX	3 (E46), 320 d	M47 D20 (204D4)		6.0	11.54	39.0	A	B
8208.101	IN	3 (E46), 325 i	M54 B25 (256S5)		5.0	10.04	42.0	A	B
8209.101	EX	3 (E46), 325 i	M54 B25 (256S5)		6.0	10.04	48.0	A	B
8209.101	EX	3 (E46), 325 xi	M54 B25 (256S5)		6.0	10.04	48.0	A	B
8208.101	IN	3 (E46), 325 xi	M54 B25 (256S5)		5.0	10.04	42.0	A	B
8162.101	IN-EX	3 (E46), 330 d	M57 D30 (306D1)		6.0	11.54	39.0	A	B
8162.101	IN-EX	3 (E46), 330 d	M57 D30 (306D2)		6.0	11.54	39.0	A	B
8208.101	IN	3 (E46), 330 i	M54 B30 (306S3)		5.0	10.04	42.0	A	B
8209.101	EX	3 (E46), 330 i	M54 B30 (306S3)		6.0	10.04	48.0	A	B
8162.101	IN-EX	3 (E46), 330 xd	M57 D30 (306D1)		6.0	11.54	39.0	A	B
8162.101	IN-EX	3 (E46), 330 xd	M57 D30 (306D2)		6.0	11.54	39.0	A	B
8208.101	IN	3 (E46), 330 xi	M54 B30 (306S3)		5.0	10.04	42.0	A	B
8209.101	EX	3 (E46), 330 xi	M54 B30 (306S3)		6.0	10.04	48.0	A	B
8162.101	IN-EX	3 (E90), 318 d	M47 D20 (204D4)		6.0	11.54	39.0	A	B
8162.101	IN-EX	3 (E90), 320 d	M47 D20 (204D4)/N47 D20 C		6.0	11.54	39.0	A	B
8162.101	IN-EX	3 (E90), 320 d xDrive	N47 D20 C		6.0	11.54	39.0	A	B
8208.101	IN	3 (E90), 325 i	N52 B25 A		5.0	10.04	42.0	A	B
8209.101	EX	3 (E90), 325 i	N52 B25 A		6.0	10.04	48.0	A	B
8208.101	IN	3 (E90), 325 i	N53 B30 A		5.0	10.04	42.0	A	B
8209.101	EX	3 (E90), 325 i	N53 B30 A		6.0	10.04	48.0	A	B
8208.101	IN	3 (E90), 325 i xDrive	N53 B30 A		5.0	10.04	42.0	A	B
8209.101	EX	3 (E90), 325 i xDrive	N53 B30 A		6.0	10.04	48.0	A	B
8208.101	IN	3 (E90), 325 xi	N52 B25 A		5.0	10.04	42.0	A	B
8209.101	EX	3 (E90), 325 xi	N52 B25 A		6.0	10.04	48.0	A	B
8209.101	EX	3 (E90), 325 xi	N53 B30 A		6.0	10.04	48.0	A	B
8208.101	IN	3 (E90), 325 xi	N53 B30 A		5.0	10.04	42.0	A	B
8209.101	EX	3 (E90), 330 i	N52 B30 A/N52 B30 BF/N52		6.0	10.04	48.0	A	B
8208.101	IN	3 (E90), 330 i	N52 B30 A/N52 B30 BF/N52		5.0	10.04	42.0	A	B
8209.101	EX	3 (E90), 330 i	N53 B30 A		6.0	10.04	48.0	A	B
8208.101	IN	3 (E90), 330 i	N53 B30 A		5.0	10.04	42.0	A	B
8209.101	EX	3 (E90), 330 i xDrive	N53 B30 A		6.0	10.04	48.0	A	B
8208.101	IN	3 (E90), 330 i xDrive	N53 B30 A		5.0	10.04	42.0	A	B
8209.101	EX	3 (E90), 330 xi	N52 B30 A		6.0	10.04	48.0	A	B
8208.101	IN	3 (E90), 330 xi	N52 B30 A		5.0	10.04	42.0	A	B
8208.101	IN	3 (E90), 330 xi	N53 B30 A		5.0	10.04	42.0	A	B
8209.101	EX	3 (E90), 330 xi	N53 B30 A		6.0	10.04	48.0	A	B
8162.101	IN-EX	3 (E90), 335 d	M57 D30 (306D5)		6.0	11.54	39.0	A	B
8209.101	EX	3 (E90), 335 i	N55 B30 A/N54 B30 A		6.0	10.04	48.0	A	B
8208.101	IN	3 (E90), 335 i	N55 B30 A/N54 B30 A		5.0	10.04	42.0	A	B
8208.101	IN	3 (E90), 335 i xDrive	N55 B30 A/N54 B30 A		5.0	10.04	42.0	A	B
8209.101	EX	3 (E90), 335 i xDrive	N55 B30 A/N54 B30 A		6.0	10.04	48.0	A	B
8209.101	EX	3 (E90), 335 xi	N55 B30 A/N54 B30 A		6.0	10.04	48.0	A	B
8208.101	IN	3 (E90), 335 xi	N55 B30 A/N54 B30 A		5.0	10.04	42.0	A	B
8022.601	IN-EX	3 Cabriolet (E30), 318 i	M40 B18 (184E1)	11121715373	7.0	12.55	43.5	F	B
8162.101	IN-EX	3 Cabriolet (E46), 320 Cd	M47 D20 (204D4)		6.0	11.54	39.0	A	B
8162.101	IN-EX	3 Cabriolet (E46), 330 Cd	M57 D30 (306D2)		6.0	11.54	39.0	A	B
8208.101	IN	3 Cabriolet (E93), 325 i	N52 B25 A		5.0	10.04	42.0	A	B
8209.101	EX	3 Cabriolet (E93), 325 i	N52 B25 A		6.0	10.04	48.0	A	B
8209.101	EX	3 Cabriolet (E93), 325 i	N53 B30 A		6.0	10.04	48.0	A	B
8208.101	IN	3 Cabriolet (E93), 325 i	N53 B30 A		5.0	10.04	42.0	A	B
8209.101	EX	3 Cabriolet (E93), 330 i	N53 B30 A		6.0	10.04	48.0	A	B
8208.101	IN	3 Cabriolet (E93), 330 i	N53 B30 A		5.0	10.04	42.0	A	B
8209.101	EX	3 Cabriolet (E93), 335 i	N54 B30 B/N55 B30 A/N54 B		6.0	10.04	48.0	A	B
8208.101	IN	3 Cabriolet (E93), 335 i	N54 B30 B/N55 B30 A/N54 B		5.0	10.04	42.0	A	B
8022.601	IN-EX	3 Compact (E36), 316 i	M43 B16 (164E2)	11121715373	7.0	12.55	43.5	F	B
8022.601	IN-EX	3 Compact (E36), 316 i	M43 B19 (194E1)	11121715373	7.0	12.55	43.5	F	B
8022.601	IN-EX	3 Compact (E36), 318 ti	M42 B18 (184S1)	11121715373	7.0	12.55	43.5	F	B
8162.101	IN-EX	3 Compact (E46), 318 td	M47 D20 (204D4)		6.0	11.54	39.0	A	B
8162.101	IN-EX	3 Compact (E46), 320 td	M47 D20 (204D4)		6.0	11.54	39.0	A	B
8209.101	EX	3 Compact (E46), 325 ti	M54 B25 (256S5)		6.0	10.04	48.0	A	B
8208.101	IN	3 Compact (E46), 325 ti	M54 B25 (256S5)		5.0	10.04	42.0	A	B

(D1) Internal diameter, (D2) External diameter, (B) Shape, (C) Material

VALVE GUIDES

IVT Ref.	Type	Model	Engine	OEM Ref.	D1	D2	Length	B	C
BMW									
8022.601	IN-EX	3 Coupe (E36), 316 i	M43 B16 (164E2)	11121715373	7.0	12.55	43.5	F	B
8022.601	IN-EX	3 Coupe (E46), 316 Ci	M43 B16 (164E3)	11121715373	7.0	12.55	43.5	F	B
8022.601	IN-EX	3 Coupe (E46), 318 Ci	M43 B19 (194E1)	11121715373	7.0	12.55	43.5	F	B
8162.101	IN-EX	3 Coupe (E46), 320 Cd	M47 D20 (204D4)		6.0	11.54	39.0	A	B
8162.101	IN-EX	3 Coupe (E46), 330 Cd	M57 D30 (306D2)		6.0	11.54	39.0	A	B
8208.101	IN	3 Coupe (E92), 325 i	N52 B25 A		5.0	10.04	42.0	A	B
8209.101	EX	3 Coupe (E92), 325 i	N52 B25 A		6.0	10.04	48.0	A	B
8208.101	IN	3 Coupe (E92), 325 i xDrive	N53 B30 A		5.0	10.04	42.0	A	B
8209.101	EX	3 Coupe (E92), 325 i xDrive	N53 B30 A		6.0	10.04	48.0	A	B
8208.101	IN	3 Coupe (E92), 325 xi	N52 B25 A		5.0	10.04	42.0	A	B
8209.101	EX	3 Coupe (E92), 325 xi	N52 B25 A		6.0	10.04	48.0	A	B
8209.101	EX	3 Coupe (E92), 330 i	N52 B30 A/N52 B30 BF/N52		6.0	10.04	48.0	A	B
8208.101	IN	3 Coupe (E92), 330 i	N52 B30 A/N52 B30 BF/N52		5.0	10.04	42.0	A	B
8209.101	EX	3 Coupe (E92), 330 i xDrive	N53 B30 A		6.0	10.04	48.0	A	B
8208.101	IN	3 Coupe (E92), 330 i xDrive	N53 B30 A		5.0	10.04	42.0	A	B
8209.101	EX	3 Coupe (E92), 330 xi	N52 B30 A		6.0	10.04	48.0	A	B
8208.101	IN	3 Coupe (E92), 330 xi	N52 B30 A		5.0	10.04	42.0	A	B
8162.101	IN-EX	3 Coupe (E92), 335 d	M57 D30 (306D5)		6.0	11.54	39.0	A	B
8209.101	EX	3 Coupe (E92), 335 i	N55 B30 A/N54 B30 A		6.0	10.04	48.0	A	B
8208.101	IN	3 Coupe (E92), 335 i	N55 B30 A/N54 B30 A		5.0	10.04	42.0	A	B
8209.101	EX	3 Coupe (E92), 335 i xDrive	N55 B30 A/N54 B30 A		6.0	10.04	48.0	A	B
8208.101	IN	3 Coupe (E92), 335 i xDrive	N55 B30 A/N54 B30 A		5.0	10.04	42.0	A	B
8209.101	EX	3 Coupe (E92), 335 xi	N55 B30 A/N54 B30 A		6.0	10.04	48.0	A	B
8208.101	IN	3 Coupe (E92), 335 xi	N55 B30 A/N54 B30 A		5.0	10.04	42.0	A	B
8022.601	IN-EX	3 Touring (E30), 316 i	M40 B16 (164E1)	11121715373	7.0	12.55	43.5	F	B
8022.601	IN-EX	3 Touring (E30), 316 i	M40 B16 (164E1)	11121715373	7.0	12.55	43.5	F	B
8022.601	IN-EX	3 Touring (E30), 318 i	M40 B18 (184E1)	11121715373	7.0	12.55	43.5	F	B
8022.601	IN-EX	3 Touring (E30), 318 i	M40 B18 (184E1)	11121715373	7.0	12.55	43.5	F	B
8022.601	IN-EX	3 Touring (E36), 316 i	M43 B16 (164E2)	11121715373	7.0	12.55	43.5	F	B
8162.101	IN-EX	3 Touring (E46), 318 d	M47 D20 (204D1)		6.0	11.54	39.0	A	B
8162.101	IN-EX	3 Touring (E46), 318 d	M47 D20 (204D4)		6.0	11.54	39.0	A	B
8022.601	IN-EX	3 Touring (E46), 318 i	M43 B19 (194E1)	11121715373	7.0	12.55	43.5	F	B
8162.101	IN-EX	3 Touring (E46), 320 d	M47 D20 (204D1)		6.0	11.54	39.0	A	B
8162.101	IN-EX	3 Touring (E46), 320 d	M47 D20 (204D4)		6.0	11.54	39.0	A	B
8209.101	EX	3 Touring (E46), 325 i	M54 B25 (256S5)		6.0	10.04	48.0	A	B
8208.101	IN	3 Touring (E46), 325 i	M54 B25 (256S5)		5.0	10.04	42.0	A	B
8208.101	IN	3 Touring (E46), 325 xi	M54 B25 (256S5)		5.0	10.04	42.0	A	B
8209.101	EX	3 Touring (E46), 325 xi	M54 B25 (256S5)		6.0	10.04	48.0	A	B
8162.101	IN-EX	3 Touring (E46), 330 d	M57 D30 (306D1)		6.0	11.54	39.0	A	B
8162.101	IN-EX	3 Touring (E46), 330 d	M57 D30 (306D2)		6.0	11.54	39.0	A	B
8208.101	IN	3 Touring (E46), 330 i	M54 B30 (306S3)		5.0	10.04	42.0	A	B
8209.101	EX	3 Touring (E46), 330 i	M54 B30 (306S3)		6.0	10.04	48.0	A	B
8162.101	IN-EX	3 Touring (E46), 330 xd	M57 D30 (306D1)		6.0	11.54	39.0	A	B
8162.101	IN-EX	3 Touring (E46), 330 xd	M57 D30 (306D2)		6.0	11.54	39.0	A	B
8208.101	IN	3 Touring (E46), 330 xi	M54 B30 (306S3)		5.0	10.04	42.0	A	B
8209.101	EX	3 Touring (E46), 330 xi	M54 B30 (306S3)		6.0	10.04	48.0	A	B
8162.101	IN-EX	3 Touring (E91), 318 d	M47 D20 (204D4)		6.0	11.54	39.0	A	B
8162.101	IN-EX	3 Touring (E91), 320 d	M47 D20 (204D4)/N47 D20 C		6.0	11.54	39.0	A	B
8162.101	IN-EX	3 Touring (E91), 320 d xDrive	N47 D20 C		6.0	11.54	39.0	A	B
8208.101	IN	3 Touring (E91), 325 i	N52 B25 A		5.0	10.04	42.0	A	B
8209.101	EX	3 Touring (E91), 325 i	N52 B25 A		6.0	10.04	48.0	A	B
8208.101	IN	3 Touring (E91), 325 i	N53 B30 A		5.0	10.04	42.0	A	B
8209.101	EX	3 Touring (E91), 325 i	N53 B30 A		6.0	10.04	48.0	A	B
8209.101	EX	3 Touring (E91), 325 i	N53 B30 A		6.0	10.04	48.0	A	B
8208.101	IN	3 Touring (E91), 325 i	N53 B30 A		5.0	10.04	42.0	A	B
8208.101	IN	3 Touring (E91), 325 i xDrive	N53 B30 A		5.0	10.04	42.0	A	B
8209.101	EX	3 Touring (E91), 325 i xDrive	N53 B30 A		6.0	10.04	48.0	A	B
8208.101	IN	3 Touring (E91), 325 xi	N52 B25 A		5.0	10.04	42.0	A	B
8209.101	EX	3 Touring (E91), 325 xi	N52 B25 A		6.0	10.04	48.0	A	B
8209.101	EX	3 Touring (E91), 325 xi	N53 B30 A		6.0	10.04	48.0	A	B
8208.101	IN	3 Touring (E91), 325 xi	N53 B30 A		5.0	10.04	42.0	A	B
8209.101	EX	3 Touring (E91), 330 i	N52 B30 A		6.0	10.04	48.0	A	B

(D1) Internal diameter, (D2) External diameter, (B) Shape, (C) Material

VALVE GUIDES

IVT Ref.	Type	Model	Engine	OEM Ref.	D1	D2	Length	B	C
BMW									
8208.101	IN	3 Touring (E91), 330 i	N52 B30 A		5.0	10.04	42.0	A	B
8208.101	IN	3 Touring (E91), 330 i	N53 B30 A		5.0	10.04	42.0	A	B
8209.101	EX	3 Touring (E91), 330 i	N53 B30 A		6.0	10.04	48.0	A	B
8208.101	IN	3 Touring (E91), 330 i xDrive	N53 B30 A		5.0	10.04	42.0	A	B
8209.101	EX	3 Touring (E91), 330 i xDrive	N53 B30 A		6.0	10.04	48.0	A	B
8208.101	IN	3 Touring (E91), 330 xi	N52 B30 A		5.0	10.04	42.0	A	B
8209.101	EX	3 Touring (E91), 330 xi	N52 B30 A		6.0	10.04	48.0	A	B
8208.101	IN	3 Touring (E91), 330 xi	N53 B30 A		5.0	10.04	42.0	A	B
8209.101	EX	3 Touring (E91), 330 xi	N53 B30 A		6.0	10.04	48.0	A	B
8162.101	IN-EX	3 Touring (E91), 335 d	M57 D30 (306D5)		6.0	11.54	39.0	A	B
8209.101	EX	3 Touring (E91), 335 i	N55 B30 A/N54 B30 A		6.0	10.04	48.0	A	B
8208.101	IN	3 Touring (E91), 335 i	N55 B30 A/N54 B30 A		5.0	10.04	42.0	A	B
8209.101	EX	3 Touring (E91), 335 i xDrive	N55 B30 A/N54 B30 A		6.0	10.04	48.0	A	B
8208.101	IN	3 Touring (E91), 335 i xDrive	N55 B30 A/N54 B30 A		5.0	10.04	42.0	A	B
8209.101	EX	3 Touring (E91), 335 xi	N55 B30 A/N54 B30 A		6.0	10.04	48.0	A	B
8208.101	IN	3 Touring (E91), 335 xi	N55 B30 A/N54 B30 A		5.0	10.04	42.0	A	B
8015.601	IN-EX	3.0 S / CS / L / Si / CSi	E3	11121263642	8.0	14.04	50.0	F	B
8213.101	IN-EX	316 d, 3 (E90)	N47 D20 C		5.0	10.02	35.5	A	B
8213.101	IN-EX	316 d, 3 (F30, F80)	N47 D20 C/B47 D20 A		5.0	10.02	35.5	A	B
8213.101	IN-EX	316 d, 3 Touring (E91)	N47 D20 C		5.0	10.02	35.5	A	B
8213.101	IN-EX	316 d, 3 Touring (F31)	N47 D20 C/B47 D20 A		5.0	10.02	35.5	A	B
8213.101	IN-EX	318 d xDrive, 3 (F30, F80)	N47 D20 C		5.0	10.02	35.5	A	B
8213.101	IN-EX	318 d xDrive, 3 Touring (F31)	N47 D20 C		5.0	10.02	35.5	A	B
8213.101	IN-EX	318 d, 3 (E90)	N47 D20 A		5.0	10.02	35.5	A	B
8213.101	IN-EX	318 d, 3 (E90)	N47 D20 A/N47 D20 C		5.0	10.02	35.5	A	B
8213.101	IN-EX	318 d, 3 (F30, F80)	N47 D20 C		5.0	10.02	35.5	A	B
8213.101	IN-EX	318 d, 3 Gran Turismo (F34)	N47 D20 C		5.0	10.02	35.5	A	B
8213.101	IN-EX	318 d, 3 Touring (E91)	N47 D20 A/N47 D20 C		5.0	10.02	35.5	A	B
8213.101	IN-EX	318 d, 3 Touring (E91)	N47 D20 C		5.0	10.02	35.5	A	B
8213.101	IN-EX	318 d, 3 Touring (F31)	N47 D20 C		5.0	10.02	35.5	A	B
8058.601	IN-EX	318 is	M42 B18	11121735534	6.0	12.55	43.4	F	B
8058.601	IN-EX	318 is	M42 B18 TU1	11121735534	6.0	12.55	43.4	F	B
8058.601	IN-EX	318 is	M44 B19	11121735534	6.0	12.55	43.4	F	B
8058.601	IN-EX	318 is Coupé	M42 B18	11121735534	6.0	12.55	43.4	F	B
8058.601	IN-EX	318 is Coupé	M42 B18 TU1	11121735534	6.0	12.55	43.4	F	B
8058.601	IN-EX	318 is Coupé	M44 B19	11121735534	6.0	12.55	43.4	F	B
8058.601	IN-EX	318 ti Compact	M42 B18	11121735534	6.0	12.55	43.4	F	B
8058.601	IN-EX	318 ti Compact	M42 B18 TU1	11121735534	6.0	12.55	43.4	F	B
8058.601	IN-EX	318 ti Compact	M44 B19	11121735534	6.0	12.55	43.4	F	B
8213.101	IN-EX	320 d xDrive, 3 (E90)	N47 D20 C		5.0	10.02	35.5	A	B
8213.101	IN-EX	320 d xDrive, 3 (E90)	N47 D20 C		5.0	10.02	35.5	A	B
8213.101	IN-EX	320 d xDrive, 3 (E90)	N47 D20 C		5.0	10.02	35.5	A	B
8213.101	IN-EX	320 d xDrive, 3 (F30, F80)	N47 D20 C		5.0	10.02	35.5	A	B
8213.101	IN-EX	320 d xDrive, 3 Coupe (E92)	N47 D20 C		5.0	10.02	35.5	A	B
8213.101	IN-EX	320 d xDrive, 3 Coupe (E92)	N47 D20 C		5.0	10.02	35.5	A	B
8213.101	IN-EX	320 d xDrive, 3 Gran Turismo (F3	N47 D20 C		5.0	10.02	35.5	A	B
8213.101	IN-EX	320 d xDrive, 3 Gran Turismo (F3	N47 D20 C		5.0	10.02	35.5	A	B
8213.101	IN-EX	320 d xDrive, 3 Touring (E91)	N47 D20 C		5.0	10.02	35.5	A	B
8213.101	IN-EX	320 d xDrive, 3 Touring (E91)	N47 D20 C		5.0	10.02	35.5	A	B
8213.101	IN-EX	320 d xDrive, 3 Touring (F31)	N47 D20 C		5.0	10.02	35.5	A	B
8213.101	IN-EX	320 d xDrive, 3 Touring (F31)	N47 D20 C		5.0	10.02	35.5	A	B
8213.101	IN-EX	320 d, 3 (E90)	M47 D20 (204D4)/N47 D20 C		5.0	10.02	35.5	A	B
8213.101	IN-EX	320 d, 3 (E90)	N47 D20 A/N47 D20 C		5.0	10.02	35.5	A	B
8213.101	IN-EX	320 d, 3 (E90)	N47 D20 C		5.0	10.02	35.5	A	B
8213.101	IN-EX	320 d, 3 (F30, F80)	N47 D20 C		5.0	10.02	35.5	A	B
8213.101	IN-EX	320 d, 3 (F30, F80)	N47 D20 C		5.0	10.02	35.5	A	B
8213.101	IN-EX	320 d, 3 (F30, F80)	N47 D20 C/B47 D20 A		5.0	10.02	35.5	A	B
8213.101	IN-EX	320 d, 3 Cabriolet (E93)	N47 D20 A/N47 D20 C		5.0	10.02	35.5	A	B
8213.101	IN-EX	320 d, 3 Cabriolet (E93)	N47 D20 C		5.0	10.02	35.5	A	B
8213.101	IN-EX	320 d, 3 Cabriolet (E93)	N47 D20 C		5.0	10.02	35.5	A	B
8213.101	IN-EX	320 d, 3 Coupe (E92)	N47 D20 A/N47 D20 C		5.0	10.02	35.5	A	B
8213.101	IN-EX	320 d, 3 Coupe (E92)	N47 D20 C		5.0	10.02	35.5	A	B

(D1) Internal diameter, (D2) External diameter, (B) Shape, (C) Material

VALVE GUIDES

IVT Ref.	Type	Model	Engine	OEM Ref.	D1	D2	Length	B	C
BMW									
8213.101	IN-EX	320 d, 3 Gran Turismo (F34)	N47 D20 C		5.0	10.02	35.5	A	B
8213.101	IN-EX	320 d, 3 Gran Turismo (F34)	N47 D20 C		5.0	10.02	35.5	A	B
8213.101	IN-EX	320 d, 3 Touring (E91)	N47 D20 A/N47 D20 C		5.0	10.02	35.5	A	B
8213.101	IN-EX	320 d, 3 Touring (E91)	N47 D20 C		5.0	10.02	35.5	A	B
8213.101	IN-EX	320 d, 3 Touring (F31)	N47 D20 C		5.0	10.02	35.5	A	B
8213.101	IN-EX	320 d, 3 Touring (F31)	N47 D20 C		5.0	10.02	35.5	A	B
8213.101	IN-EX	320 d, 3 Touring (F31)	N47 D20 C/B47 D20 A		5.0	10.02	35.5	A	B
8213.101	IN-EX	320 xd, 3 (E90)	N47 D20 C		5.0	10.02	35.5	A	B
8213.101	IN-EX	320 xd, 3 Coupe (E92)	N47 D20 A		5.0	10.02	35.5	A	B
8213.101	IN-EX	320 xd, 3 Touring (E91)	N47 D20 A		5.0	10.02	35.5	A	B
8058.601	IN-EX	323 i	M52 B25 TU	11121735534	6.0	12.55	43.4	F	B
8058.601	IN-EX	323 i 2.5	M52 B25	11121735534	6.0	12.55	43.4	F	B
8058.601	IN-EX	323 i Cabriolet	M52 B25	11121735534	6.0	12.55	43.4	F	B
8058.601	IN-EX	323 i Coupé	M52 B25	11121735534	6.0	12.55	43.4	F	B
8058.601	IN-EX	323 i Touring	M52 B25	11121735534	6.0	12.55	43.4	F	B
8058.601	IN-EX	323 ti Compact	M52 B25	11121735534	6.0	12.55	43.4	F	B
8213.101	IN-EX	325 d, 3 (E90)	N57 D30 A		5.0	10.02	35.5	A	B
8213.101	IN-EX	325 d, 3 (F30, F80)	N47 D20 D		5.0	10.02	35.5	A	B
8213.101	IN-EX	325 d, 3 Gran Turismo (F34)	N47 D20 D		5.0	10.02	35.5	A	B
8213.101	IN-EX	325 d, 3 Touring (F31)	N47 D20 D		5.0	10.02	35.5	A	B
8058.601	IN-EX	325 i	M50 B25	11121735534	6.0	12.55	43.4	F	B
8058.601	IN-EX	325 i	M50 B25 TU	11121735534	6.0	12.55	43.4	F	B
8058.601	IN-EX	325 i Cabriolet	M50 B25	11121735534	6.0	12.55	43.4	F	B
8058.601	IN-EX	325 i Cabriolet	M50 B25 TU	11121735534	6.0	12.55	43.4	F	B
8058.601	IN-EX	325 i Coupé	M50 B25	11121735534	6.0	12.55	43.4	F	B
8058.601	IN-EX	325 i Coupé	M50 B25 TU	11121735534	6.0	12.55	43.4	F	B
8058.601	IN-EX	328 Ci Coupé	M52 B28	11121735534	6.0	12.55	43.4	F	B
8058.601	IN-EX	328 i	M52 B28	11121735534	6.0	12.55	43.4	F	B
8058.601	IN-EX	328 i Touring	M52 B28	11121735534	6.0	12.55	43.4	F	B
8213.101	IN-EX	418 d, 4 Gran Coupe (F36)	B47 D20 A		5.0	10.02	35.5	A	B
8213.101	IN-EX	418 d, 4 Gran Coupe (F36)	N47 D20 C		5.0	10.02	35.5	A	B
8213.101	IN-EX	420 d xDrive, 4 Coupe (F32, F82)	N47 D20 C		5.0	10.02	35.5	A	B
8213.101	IN-EX	420 d xDrive, 4 Coupe (F32, F82)	N47 D20 C		5.0	10.02	35.5	A	B
8213.101	IN-EX	420 d xDrive, 4 Gran Coupe (F36)	N47 D20 C		5.0	10.02	35.5	A	B
8213.101	IN-EX	420 d, 4 Cabriolet (F33, F83)	N47 D20 C		5.0	10.02	35.5	A	B
8213.101	IN-EX	420 d, 4 Coupe (F32, F82)	N47 D20 C		5.0	10.02	35.5	A	B
8213.101	IN-EX	420 d, 4 Coupe (F32, F82)	N47 D20 C		5.0	10.02	35.5	A	B
8213.101	IN-EX	420 d, 4 Gran Coupe (F36)	N47 D20 C		5.0	10.02	35.5	A	B
8213.101	IN-EX	425 d, 4 Cabriolet (F33, F83)	N47 D20 D		5.0	10.02	35.5	A	B
8213.101	IN-EX	425 d, 4 Coupe (F32, F82)	N47 D20 D		5.0	10.02	35.5	A	B
8022.601	IN-EX	5 (E34), 518 i	M40 B18 (184E1)	11121715373	7.0	12.55	43.5	F	B
8022.601	IN-EX	5 (E34), 518 i	M43 B18 (184E2)	11121715373	7.0	12.55	43.5	F	B
8022.601	IN-EX	5 (E34), 520 i 24V	M50 B20 (206S2)/M50 B20 (	11121715373	7.0	12.55	43.5	F	B
8162.101	IN-EX	5 (E39), 520 d	M47 D20 (204D1)		6.0	11.54	39.0	A	B
8161.604	IN-EX	5 (E39), 520 i	M52 B20 (206S3)	6110530329	7.0	12.56	37.5	F	S03
8208.101	IN	5 (E39), 525 i	M54 B25 (256S5)		5.0	10.04	42.0	A	B
8209.101	EX	5 (E39), 525 i	M54 B25 (256S5)		6.0	10.04	48.0	A	B
8162.101	IN-EX	5 (E39), 530 d	M57 D30 (306D1)		6.0	11.54	39.0	A	B
8208.101	IN	5 (E39), 530 i	M54 B30 (306S3)		5.0	10.04	42.0	A	B
8209.101	EX	5 (E39), 530 i	M54 B30 (306S3)		6.0	10.04	48.0	A	B
8162.101	IN-EX	5 (E60), 520 d	N47 D20 A/M47 D20 (204D4)		6.0	11.54	39.0	A	B
8209.101	EX	5 (E60), 523 i	N52 B25 A		6.0	10.04	48.0	A	B
8208.101	IN	5 (E60), 523 i	N52 B25 A		5.0	10.04	42.0	A	B
8209.101	EX	5 (E60), 523 i	N52 B25 A/N52 B25 BE		6.0	10.04	48.0	A	B
8208.101	IN	5 (E60), 523 i	N52 B25 A/N52 B25 BE		5.0	10.04	42.0	A	B
8209.101	EX	5 (E60), 525 i	M54 B25 (256S5)		6.0	10.04	48.0	A	B
8208.101	IN	5 (E60), 525 i	M54 B25 (256S5)		5.0	10.04	42.0	A	B
8162.101	IN-EX	5 (E60), 525 i	N52 B25 A		6.0	11.54	39.0	A	B
8209.101	EX	5 (E60), 525 i	N52 B25 A		6.0	10.04	48.0	A	B
8208.101	IN	5 (E60), 525 i	N52 B25 A		5.0	10.04	42.0	A	B
8209.101	EX	5 (E60), 525 i	N53 B30 A		6.0	10.04	48.0	A	B
8208.101	IN	5 (E60), 525 i	N53 B30 A		5.0	10.04	42.0	A	B

(D1) Internal diameter, (D2) External diameter, (B) Shape, (C) Material

VALVE GUIDES

IVT Ref.	Type	Model	Engine	OEM Ref.	D1	D2	Length	B	C
BMW									
8209.101	EX	5 (E60), 525 i xDrive	N53 B30 A		6.0	10.04	48.0	A	B
8208.101	IN	5 (E60), 525 i xDrive	N53 B30 A		5.0	10.04	42.0	A	B
8162.101	IN-EX	5 (E60), 525 xi	N52 B25 A		6.0	11.54	39.0	A	B
8209.101	EX	5 (E60), 525 xi	N52 B25 A		6.0	10.04	48.0	A	B
8208.101	IN	5 (E60), 525 xi	N52 B25 A		5.0	10.04	42.0	A	B
8208.101	IN	5 (E60), 525 xi	N53 B30 A		5.0	10.04	42.0	A	B
8209.101	EX	5 (E60), 525 xi	N53 B30 A		6.0	10.04	48.0	A	B
8209.101	EX	5 (E60), 530 i	M54 B30 (306S3)		6.0	10.04	48.0	A	B
8208.101	IN	5 (E60), 530 i	M54 B30 (306S3)		5.0	10.04	42.0	A	B
8209.101	EX	5 (E60), 530 i	N52 B30 A		6.0	10.04	48.0	A	B
8208.101	IN	5 (E60), 530 i	N52 B30 A		5.0	10.04	42.0	A	B
8209.101	EX	5 (E60), 530 i	N53 B30 A		6.0	10.04	48.0	A	B
8208.101	IN	5 (E60), 530 i	N53 B30 A		5.0	10.04	42.0	A	B
8209.101	EX	5 (E60), 530 i xDrive	N53 B30 A		6.0	10.04	48.0	A	B
8208.101	IN	5 (E60), 530 i xDrive	N53 B30 A		5.0	10.04	42.0	A	B
8209.101	EX	5 (E60), 530 xi	N52 B30 A		6.0	10.04	48.0	A	B
8209.101	EX	5 (E60), 530 xi	N52 B30 A		6.0	10.04	48.0	A	B
8208.101	IN	5 (E60), 530 xi	N52 B30 A		5.0	10.04	42.0	A	B
8208.101	IN	5 (E60), 530 xi	N52 B30 A		5.0	10.04	42.0	A	B
8162.101	IN-EX	5 (E60), 535 d	M57 D30 (306D5)		6.0	11.54	39.0	A	B
8209.101	EX	5 (F10, F18), 528 i	N53 B30 A		6.0	10.04	48.0	A	B
8208.101	IN	5 (F10, F18), 528 i	N53 B30 A		5.0	10.04	42.0	A	B
8209.101	EX	5 (F10, F18), 530 i	N53 B30 A		6.0	10.04	48.0	A	B
8208.101	IN	5 (F10, F18), 530 i	N53 B30 A		5.0	10.04	42.0	A	B
8022.601	IN-EX	5 Touring (E34), 518 i	M43 B18 (184E2)	11121715373	7.0	12.55	43.5	F	B
8162.101	IN-EX	5 Touring (E39), 520 d	M47 D20 (204D1)		6.0	11.54	39.0	A	B
8209.101	EX	5 Touring (E39), 525 i	M54 B25 (256S5)		6.0	10.04	48.0	A	B
8208.101	IN	5 Touring (E39), 525 i	M54 B25 (256S5)		5.0	10.04	42.0	A	B
8162.101	IN-EX	5 Touring (E39), 530 d	M57 D30 (306D1)		6.0	11.54	39.0	A	B
8162.101	IN-EX	5 Touring (E39), 530 d	M57 D30 (306D1)		6.0	11.54	39.0	A	B
8208.101	IN	5 Touring (E39), 530 i	M54 B30 (306S3)		5.0	10.04	42.0	A	B
8209.101	EX	5 Touring (E39), 530 i	M54 B30 (306S3)		6.0	10.04	48.0	A	B
8162.101	IN-EX	5 Touring (E61), 520 d	N47 D20 A/M47 D20 (204D4)		6.0	11.54	39.0	A	B
8208.101	IN	5 Touring (E61), 523 i	N52 B25 A		5.0	10.04	42.0	A	B
8209.101	EX	5 Touring (E61), 523 i	N52 B25 A		6.0	10.04	48.0	A	B
8208.101	IN	5 Touring (E61), 523 i	N52 B25 B/N52 B25 A/N52 B		5.0	10.04	42.0	A	B
8209.101	EX	5 Touring (E61), 523 i	N52 B25 B/N52 B25 A/N52 B		6.0	10.04	48.0	A	B
8208.101	IN	5 Touring (E61), 525 i	M54 B25 (256S5)		5.0	10.04	42.0	A	B
8209.101	EX	5 Touring (E61), 525 i	M54 B25 (256S5)		6.0	10.04	48.0	A	B
8208.101	IN	5 Touring (E61), 525 i	N52 B25 A		5.0	10.04	42.0	A	B
8209.101	EX	5 Touring (E61), 525 i	N52 B25 A		6.0	10.04	48.0	A	B
8208.101	IN	5 Touring (E61), 525 i	N53 B30 A		5.0	10.04	42.0	A	B
8209.101	EX	5 Touring (E61), 525 i	N53 B30 A		6.0	10.04	48.0	A	B
8208.101	IN	5 Touring (E61), 525 i xDrive	N53 B30 A		5.0	10.04	42.0	A	B
8209.101	EX	5 Touring (E61), 525 i xDrive	N53 B30 A		6.0	10.04	48.0	A	B
8209.101	EX	5 Touring (E61), 525 xi	N52 B25 A		6.0	10.04	48.0	A	B
8208.101	IN	5 Touring (E61), 525 xi	N52 B25 A		5.0	10.04	42.0	A	B
8208.101	IN	5 Touring (E61), 525 xi	N53 B30 A		5.0	10.04	42.0	A	B
8209.101	EX	5 Touring (E61), 525 xi	N53 B30 A		6.0	10.04	48.0	A	B
8208.101	IN	5 Touring (E61), 530 i	N52 B30 A		5.0	10.04	42.0	A	B
8209.101	EX	5 Touring (E61), 530 i	N52 B30 A		6.0	10.04	48.0	A	B
8208.101	IN	5 Touring (E61), 530 i	N53 B30 A		5.0	10.04	42.0	A	B
8209.101	EX	5 Touring (E61), 530 i	N53 B30 A		6.0	10.04	48.0	A	B
8208.101	IN	5 Touring (E61), 530 i xDrive	N53 B30 A		5.0	10.04	42.0	A	B
8209.101	EX	5 Touring (E61), 530 i xDrive	N53 B30 A		6.0	10.04	48.0	A	B
8208.101	IN	5 Touring (E61), 530 xi	N52 B30 A		5.0	10.04	42.0	A	B
8209.101	EX	5 Touring (E61), 530 xi	N52 B30 A		6.0	10.04	48.0	A	B
8209.101	EX	5 Touring (E61), 530 xi	N52 B30 A		6.0	10.04	48.0	A	B
8208.101	IN	5 Touring (E61), 530 xi	N52 B30 A		5.0	10.04	42.0	A	B
8162.101	IN-EX	5 Touring (E61), 535 d	M57 D30 (306D5)		6.0	11.54	39.0	A	B
8209.101	EX	5 Touring (F11), 523 i	N53 B30 A		6.0	10.04	48.0	A	B
8208.101	IN	5 Touring (F11), 523 i	N53 B30 A		5.0	10.04	42.0	A	B

(D1) Internal diameter, (D2) External diameter, (B) Shape, (C) Material

VALVE GUIDES

IVT Ref.	Type	Model	Engine	OEM Ref.	D1	D2	Length	B	C
BMW									
8209.101	EX	5 Touring (F11), 528 i	N53 B30 A		6.0	10.04	48.0	A	B
8208.101	IN	5 Touring (F11), 528 i	N53 B30 A		5.0	10.04	42.0	A	B
8213.101	IN-EX	518 d, 5 (F10)	N47 D20 C		5.0	10.02	35.5	A	B
8213.101	IN-EX	518 d, 5 Touring (F11)	N47 D20 C		5.0	10.02	35.5	A	B
8213.101	IN-EX	520 d xDrive, 5 (F10)	N47 D20 C		5.0	10.02	35.5	A	B
8213.101	IN-EX	520 d xDrive, 5 Touring (F11)	N47 D20 C		5.0	10.02	35.5	A	B
8213.101	IN-EX	520 d, 5 (E60)	N47 D20 A/N47 D20 C		5.0	10.02	35.5	A	B
8213.101	IN-EX	520 d, 5 (F10)	N47 D20 C		5.0	10.02	35.5	A	B
8213.101	IN-EX	520 d, 5 Gran Turismo (F07)	N47 D20 C		5.0	10.02	35.5	A	B
8213.101	IN-EX	520 d, 5 Touring (E61)	N47 D20 A/N47 D20 C		5.0	10.02	35.5	A	B
8213.101	IN-EX	520 d, 5 Touring (F11)	N47 D20 C		5.0	10.02	35.5	A	B
8058.601	IN-EX	523 i	M52 B25	11121735534	6.0	12.55	43.4	F	B
8058.601	IN-EX	523 i	M52 B25 TU	11121735534	6.0	12.55	43.4	F	B
8058.601	IN-EX	523 i Touring	M52 B25	11121735534	6.0	12.55	43.4	F	B
8058.601	IN-EX	523 i Touring	M52 B25 TU	11121735534	6.0	12.55	43.4	F	B
8015.601	IN-EX	525	125	11121263642	8.0	14.04	50.0	F	B
8015.601	IN-EX	525	M 30 B 25 V	11121263642	8.0	14.04	50.0	F	B
8213.101	IN-EX	525 d xDrive, 5 (F10)	N47 D20 D		5.0	10.02	35.5	A	B
8213.101	IN-EX	525 d xDrive, 5 (F10)	N47 D20 D		5.0	10.02	35.5	A	B
8213.101	IN-EX	525 d xDrive, 5 Touring (F11)	N47 D20 D		5.0	10.02	35.5	A	B
8213.101	IN-EX	525 d xDrive, 5 Touring (F11)	N47 D20 D/B47 D20 A		5.0	10.02	35.5	A	B
8213.101	IN-EX	525 d, 5 (F10)	N47 D20 D		5.0	10.02	35.5	A	B
8213.101	IN-EX	525 d, 5 (F10)	N47 D20 D		5.0	10.02	35.5	A	B
8213.101	IN-EX	525 d, 5 Touring (F11)	N47 D20 D		5.0	10.02	35.5	A	B
8213.101	IN-EX	525 d, 5 Touring (F11)	N47 D20 D/B47 D20 A		5.0	10.02	35.5	A	B
8015.601	IN-EX	525 i / iA	M 30 B 25 L	11121263642	8.0	14.04	50.0	F	B
8058.601	IN-EX	525 i 24V	M50 B25	11121735534	6.0	12.55	43.4	F	B
8058.601	IN-EX	525 i 24V	M50 B25 TU	11121735534	6.0	12.55	43.4	F	B
8058.601	IN-EX	525 i Touring	M50 B25	11121735534	6.0	12.55	43.4	F	B
8058.601	IN-EX	525 i Touring	M50 B25 TU	11121735534	6.0	12.55	43.4	F	B
8058.601	IN-EX	525 ix Touring	M50 B25	11121735534	6.0	12.55	43.4	F	B
8015.601	IN-EX	528	128	11121263642	8.0	14.04	50.0	F	B
8015.601	IN-EX	528 i	M 30 B 25 L	11121263642	8.0	14.04	50.0	F	B
8058.601	IN-EX	528 i	M52 B28	11121735534	6.0	12.55	43.4	F	B
8058.601	IN-EX	528 i	M52 B28 TU	11121735534	6.0	12.55	43.4	F	B
8058.601	IN-EX	528 i Touring	M52 B28	11121735534	6.0	12.55	43.4	F	B
8058.601	IN-EX	528 i Touring	M52 B28 TU	11121735534	6.0	12.55	43.4	F	B
8015.601	IN-EX	530 i	M 30 B 30 ME	11121263642	8.0	14.04	50.0	F	B
8058.601	IN-EX	530 i	M54 B30	11121735534	6.0	12.55	43.4	F	B
8015.601	IN-EX	535 i	***** 3453 ccm	11121263642	8.0	14.04	50.0	F	B
8015.601	IN-EX	535 i	M 30 B 35 L	11121263642	8.0	14.04	50.0	F	B
8209.101	EX	6 (E63), 630 i	N52 B30 A		6.0	10.04	48.0	A	B
8208.101	IN	6 (E63), 630 i	N52 B30 A		5.0	10.04	42.0	A	B
8162.101	IN-EX	6 (E63), 635 d	M57 D30 (306D5)		6.0	11.54	39.0	A	B
8209.101	EX	6 Cabriolet (E64), 630 i	N52 B30 A		6.0	10.04	48.0	A	B
8208.101	IN	6 Cabriolet (E64), 630 i	N52 B30 A		5.0	10.04	42.0	A	B
8162.101	IN-EX	6 Cabriolet (E64), 635 d	M57 D30 (306D5)		6.0	11.54	39.0	A	B
8015.601	IN-EX	628 CSi	M 30 B 25 L	11121263642	8.0	14.04	50.0	F	B
8015.601	IN-EX	630 CS	3000/9	11121263642	8.0	14.04	50.0	F	B
8015.601	IN-EX	633 CSi	M 30 B 32 L	11121263642	8.0	14.04	50.0	F	B
8015.601	IN-EX	635 CSi	M 30 B 34 M	11121263642	8.0	14.04	50.0	F	B
8022.601	IN-EX	7 (E32), 750 i,iL V12	M70 B50 (5012A)	11121715373	7.0	12.55	43.5	F	B
8162.101	IN-EX	7 (E38), 730 d	M57 D30 (306D1)		6.0	11.54	39.0	A	B
8162.101	IN-EX	7 (E38), 730 d	M57 D30 (306D1)		6.0	11.54	39.0	A	B
8022.601	IN-EX	7 (E38), 750 i,iL	M73 B54 (54122)/M73 B54 (5	11121715373	7.0	12.55	43.5	F	B
8208.101	IN	7 (E65, E66, E67), 730 i, Li	M54 B30 (306S3)		5.0	10.04	42.0	A	B
8209.101	EX	7 (E65, E66, E67), 730 i, Li	M54 B30 (306S3)		6.0	10.04	48.0	A	B
8209.101	EX	7 (E65, E66, E67), 730 i, Li	N52 B30 A		6.0	10.04	48.0	A	B
8208.101	IN	7 (E65, E66, E67), 730 i, Li	N52 B30 A		5.0	10.04	42.0	A	B
8209.101	EX	7 (F01, F02, F03, F04), 730 i, Li	N52 B30 A/N52 B30 BF		6.0	10.04	48.0	A	B
8208.101	IN	7 (F01, F02, F03, F04), 730 i, Li	N52 B30 A/N52 B30 BF		5.0	10.04	42.0	A	B
8209.101	EX	7 (F01, F02, F03, F04), 740 i	N54 B30 A		6.0	10.04	48.0	A	B

(D1) Internal diameter, (D2) External diameter, (B) Shape, (C) Material

VALVE GUIDES

BMW

IVT Ref.	Type	Model	Engine	OEM Ref.	D1	D2	Length	B	C
8208.101	IN	7 (F01, F02, F03, F04), 740 i	N54 B30 A		5.0	10.04	42.0	A	B
8015.601	IN-EX	728	M 30 B 25 V	11121263642	8.0	14.04	50.0	F	B
8015.601	IN-EX	728 i	M 30 B 25 L	11121263642	8.0	14.04	50.0	F	B
8058.601	IN-EX	728 i	M52 B28	11121735534	6.0	12.55	43.4	F	B
8058.601	IN-EX	728 i	M52 B28 TU	11121735534	6.0	12.55	43.4	F	B
8015.601	IN-EX	730	3000/9	11121263642	8.0	14.04	50.0	F	B
8015.601	IN-EX	730 i / iL	M 30 B 30 ME	11121263642	8.0	14.04	50.0	F	B
8015.601	IN-EX	732 i - 733 i - 735 i	M 30 B 32 L	11121263642	8.0	14.04	50.0	F	B
8015.601	IN-EX	735 i	M 30 B 34 M	11121263642	8.0	14.04	50.0	F	B
8015.601	IN-EX	735 i	M 30 B 35 L	11121263642	8.0	14.04	50.0	F	B
8022.601	IN-EX	8 (E31), 850 Ci	M73 B54 (54121)	11121715373	7.0	12.55	43.5	F	B
8022.601	IN-EX	8 (E31), 850 CSi	S70 B56 (56121)	11121715373	7.0	12.55	43.5	F	B
8022.601	IN-EX	8 (E31), 850 i,Ci	M70 B50 (5012A)	11121715373	7.0	12.55	43.5	F	B
8015.601	IN-EX	M535 i	M 30 B 34 M	11121263642	8.0	14.04	50.0	F	B
8015.601	IN-EX	M635 CSi	M 30 B 35 L	11121263642	8.0	14.04	50.0	F	B
8213.101	IN-EX	sDrive 16 d , X1 (E84)	N47 D20 C		5.0	10.02	35.5	A	B
8213.101	IN-EX	sDrive 18 d, X1 (E84)	N47 D20 C		5.0	10.02	35.5	A	B
8213.101	IN-EX	sDrive 18 d, X3 (F25)	B47 D20 A		5.0	10.02	35.5	A	B
8213.101	IN-EX	sDrive 18 d, X3 (F25)	N47 D20 C		5.0	10.02	35.5	A	B
8213.101	IN-EX	sDrive 18 d, X3 (F25)	N47 D20 C		5.0	10.02	35.5	A	B
8213.101	IN-EX	sDrive 20 d , X1 (E84)	N47 D20 C		5.0	10.02	35.5	A	B
8213.101	IN-EX	sDrive 20 d, X1 (E84)	N47 D20 C		5.0	10.02	35.5	A	B
8213.101	IN-EX	sDrive 20 d, X1 (E84)	N47 D20 C		5.0	10.02	35.5	A	B
8213.101	IN-EX	sDrive 25 d, X5 (F15, F85)	N47 D20 D		5.0	10.02	35.5	A	B
8208.101	IN	X1 (E84), xDrive 25 i	N52 B30 A		5.0	10.04	42.0	A	B
8209.101	EX	X1 (E84), xDrive 25 i	N52 B30 A		6.0	10.04	48.0	A	B
8209.101	EX	X1 (E84), xDrive 28 i	N52 B30 A		6.0	10.04	48.0	A	B
8208.101	IN	X1 (E84), xDrive 28 i	N52 B30 A		5.0	10.04	42.0	A	B
8162.101	IN-EX	X3 (E83), 2.0 d	M47 D20 (204D4)		6.0	11.54	39.0	A	B
8162.101	IN-EX	X3 (E83), 2.0 d	N47 D20 A/N47 D20 C		6.0	11.54	39.0	A	B
8208.101	IN	X3 (E83), 2.5 i	M54 B25 (256S5)		5.0	10.04	42.0	A	B
8209.101	EX	X3 (E83), 2.5 i	M54 B25 (256S5)		6.0	10.04	48.0	A	B
8208.101	IN	X3 (E83), 2.5 si	N52 B25 A		5.0	10.04	42.0	A	B
8209.101	EX	X3 (E83), 2.5 si	N52 B25 A		6.0	10.04	48.0	A	B
8162.101	IN-EX	X3 (E83), 3.0 d	M57 D30 (306D2)		6.0	11.54	39.0	A	B
8162.101	IN-EX	X3 (E83), 3.0 d	M57 D30 (306D3)		6.0	11.54	39.0	A	B
8208.101	IN	X3 (E83), 3.0 i xDrive	M54 B30 (306S3)		5.0	10.04	42.0	A	B
8209.101	EX	X3 (E83), 3.0 i xDrive	M54 B30 (306S3)		6.0	10.04	48.0	A	B
8162.101	IN-EX	X3 (E83), 3.0 sd	M57 D30 (306D5)		6.0	11.54	39.0	A	B
8208.101	IN	X3 (E83), 3.0 si	N52 B30 A		5.0	10.04	42.0	A	B
8209.101	EX	X3 (E83), 3.0 si	N52 B30 A		6.0	10.04	48.0	A	B
8162.101	IN-EX	X3 (E83), xDrive 20 d	N47 D20 C		6.0	11.54	39.0	A	B
8208.101	IN	X3 (E83), xDrive 25 i	N52 B25 A		5.0	10.04	42.0	A	B
8209.101	EX	X3 (E83), xDrive 25 i	N52 B25 A		6.0	10.04	48.0	A	B
8162.101	IN-EX	X3 (E83), xDrive 30 d	M57 D30 (306D3)		6.0	11.54	39.0	A	B
8208.101	IN	X3 (E83), xDrive 30 i	N52 B30 A		5.0	10.04	42.0	A	B
8209.101	EX	X3 (E83), xDrive 30 i	N52 B30 A		6.0	10.04	48.0	A	B
8162.101	IN-EX	X3 (E83), xDrive 35 d	M57 D30 (306D5)		6.0	11.54	39.0	A	B
8208.101	IN	X3 (F25), xDrive 28 i	N52 B30 A		5.0	10.04	42.0	A	B
8209.101	EX	X3 (F25), xDrive 28 i	N52 B30 A		6.0	10.04	48.0	A	B
8162.101	IN-EX	X5 (E53), 3.0 d	M57 D30 (306D1)		6.0	11.54	39.0	A	B
8209.101	EX	X5 (E53), 3.0 i	M54 B30 (306S3)		6.0	10.04	48.0	A	B
8208.101	IN	X5 (E53), 3.0 i	M54 B30 (306S3)		5.0	10.04	42.0	A	B
8162.101	IN-EX	X5 (E70), 3.0 sd	M57 D30 (306D5)		6.0	11.54	39.0	A	B
8208.101	IN	X5 (E70), 3.0 si	N52 B30 A		5.0	10.04	42.0	A	B
8209.101	EX	X5 (E70), 3.0 si	N52 B30 A		6.0	10.04	48.0	A	B
8209.101	EX	X5 (E70), xDrive 30 i	N52 B30 A		6.0	10.04	48.0	A	B
8208.101	IN	X5 (E70), xDrive 30 i	N52 B30 A		5.0	10.04	42.0	A	B
8162.101	IN-EX	X5 (E70), xDrive 35 d	M57 D30 (306D5)		6.0	11.54	39.0	A	B
8208.101	IN	X5 (E70), xDrive 35 i	N55 B30 A		5.0	10.04	42.0	A	B
8208.101	IN	X5 (E70), xDrive 35 i	N55 B30 A		5.0	10.04	42.0	A	B
8209.101	EX	X5 (E70), xDrive 35 i	N55 B30 A		6.0	10.04	48.0	A	B

(D1) Internal diameter, (D2) External diameter, (B) Shape, (C) Material

VALVE GUIDES

IVT Ref.	Type	Model	Engine	OEM Ref.	D1	D2	Length	B	C
BMW									
8209.101	EX	X5 (E70), xDrive 35 i	N55 B30 A		6.0	10.04	48.0	A	B
8162.101	IN-EX	X6 (E71, E72), 35 d	M57 D30 (306D5)		6.0	11.54	39.0	A	B
8208.101	IN	X6 (E71, E72), 35 i	N54 B30 A		5.0	10.04	42.0	A	B
8209.101	EX	X6 (E71, E72), 35 i	N54 B30 A		6.0	10.04	48.0	A	B
8162.101	IN-EX	X6 (E71, E72), xDrive 35 d	M57 D30 (306D5)		6.0	11.54	39.0	A	B
8208.101	IN	X6 (E71, E72), xDrive 35 i	N55 B30 A/N54 B30 A		5.0	10.04	42.0	A	B
8209.101	EX	X6 (E71, E72), xDrive 35 i	N55 B30 A/N54 B30 A		6.0	10.04	48.0	A	B
8213.101	IN-EX	xDrive 18 d, X1 (E84)	N47 D20 C		5.0	10.02	35.5	A	B
8213.101	IN-EX	xDrive 18 d, X3 (E83)	N47 D20 C		5.0	10.02	35.5	A	B
8213.101	IN-EX	xDrive 20 d , X1 (E84)	N47 D20 C		5.0	10.02	35.5	A	B
8213.101	IN-EX	xDrive 20 d, X1 (E84)	N47 D20 C		5.0	10.02	35.5	A	B
8213.101	IN-EX	xDrive 20 d, X1 (E84)	N47 D20 C		5.0	10.02	35.5	A	B
8213.101	IN-EX	xDrive 20 d, X3 (E83)	N47 D20 C		5.0	10.02	35.5	A	B
8213.101	IN-EX	xDrive 20 d, X3 (F25)	N47 D20 C		5.0	10.02	35.5	A	B
8213.101	IN-EX	xDrive 20 d, X3 (F25)	N47 D20 C		5.0	10.02	35.5	A	B
8213.101	IN-EX	xDrive 23 d, X1 (E84)	N47 D20 C/N47S D20 D		5.0	10.02	35.5	A	B
8213.101	IN-EX	xDrive 25 d, X1 (E84)	N47 D20 D		5.0	10.02	35.5	A	B
8213.101	IN-EX	xDrive 25 d, X5 (F15, F85)	N47 D20 D		5.0	10.02	35.5	A	B
8022.601	IN-EX	Z3 (E36), 1.9	M43 B19 (194E1)	11121715373	7.0	12.55	43.5	F	B
8022.601	IN-EX	Z3 (E36), 1.9	M43 B19 (194E1)	11121715373	7.0	12.55	43.5	F	B
8209.101	EX	Z3 (E36), 3.0	M54 B30 (306S3)		6.0	10.04	48.0	A	B
8208.101	IN	Z3 (E36), 3.0	M54 B30 (306S3)		5.0	10.04	42.0	A	B
8058.601	IN-EX	Z3 1.9	M44 B19	11121735534	6.0	12.55	43.4	F	B
8058.601	IN-EX	Z3 2.8	M52 B28	11121735534	6.0	12.55	43.4	F	B
8058.601	IN-EX	Z3 2.8	M52 B28 TU	11121735534	6.0	12.55	43.4	F	B
8209.101	EX	Z3 Coupe (E36), 3.0	M54 B30 (306S3)		6.0	10.04	48.0	A	B
8208.101	IN	Z3 Coupe (E36), 3.0	M54 B30 (306S3)		5.0	10.04	42.0	A	B
8058.601	IN-EX	Z3 Coupé 2.8	M52 B28	11121735534	6.0	12.55	43.4	F	B
8209.101	EX	Z4 (E85), 2.5 i	M54 B25 (256S5)		6.0	10.04	48.0	A	B
8208.101	IN	Z4 (E85), 2.5 i	M54 B25 (256S5)		5.0	10.04	42.0	A	B
8208.101	IN	Z4 (E85), 2.5 i	N52 B25 A		5.0	10.04	42.0	A	B
8209.101	EX	Z4 (E85), 2.5 i	N52 B25 A		6.0	10.04	48.0	A	B
8208.101	IN	Z4 (E85), 2.5 si	N52 B25 A		5.0	10.04	42.0	A	B
8209.101	EX	Z4 (E85), 2.5 si	N52 B25 A		6.0	10.04	48.0	A	B
8209.101	EX	Z4 (E85), 3.0 i	M54 B30 (306S3)		6.0	10.04	48.0	A	B
8208.101	IN	Z4 (E85), 3.0 i	M54 B30 (306S3)		5.0	10.04	42.0	A	B
8209.101	EX	Z4 (E85), 3.0 si	N52 B30 A		6.0	10.04	48.0	A	B
8208.101	IN	Z4 (E85), 3.0 si	N52 B30 A		5.0	10.04	42.0	A	B
8209.101	EX	Z4 Coupe (E86), 3.0 si	N52 B30 A		6.0	10.04	48.0	A	B
8208.101	IN	Z4 Coupe (E86), 3.0 si	N52 B30 A		5.0	10.04	42.0	A	B
8208.101	IN	Z4 ROADSTER (E89), sDrive 23 i	N52 B25 A		5.0	10.04	42.0	A	B
8209.101	EX	Z4 ROADSTER (E89), sDrive 23 i	N52 B25 A		6.0	10.04	48.0	A	B
8209.101	EX	Z4 ROADSTER (E89), sDrive 30 i	N52 B30 A		6.0	10.04	48.0	A	B
8208.101	IN	Z4 ROADSTER (E89), sDrive 30 i	N52 B30 A		5.0	10.04	42.0	A	B
8209.101	EX	Z4 ROADSTER (E89), sDrive 35 i	N54 B30 A		6.0	10.04	48.0	A	B
8208.101	IN	Z4 ROADSTER (E89), sDrive 35 i	N54 B30 A		5.0	10.04	42.0	A	B
8208.101	IN	Z4 ROADSTER (E89), sDrive 35 i	N54 B30 A		5.0	10.04	42.0	A	B
8209.101	EX	Z4 ROADSTER (E89), sDrive 35 i	N54 B30 A		6.0	10.04	48.0	A	B
CHEVROLET-DAEWOO									
8080.104	IN-EX	AVEO 1.6i 16V	A16DMS	96103034	6.0	11.05	40.1	A	S03
8080.104	IN-EX	CIELO 1.5i 16V	A15MF	96103034	6.0	11.05	40.1	A	S03
8040.605	IN-EX	CRUZE (J300), 1.4	A 14 XER/LDD	9158589	5.0	10.03	39.0	F	S06
8137.605	IN-EX	CRUZE (J300), 1.6	LXV/F16D3/LXT	90502079	6.0	10.03	45.0	F	S06
8137.605	IN-EX	CRUZE (J300), 1.6	LXV/F16D3/LXT	90502181	6.0	10.03	45.0	F	S06
8040.605	IN-EX	CRUZE Schrägheck (J305), 1.4	A 14 XER/LDD	9158589	5.0	10.03	39.0	F	S06
8040.605	IN-EX	CRUZE Station Wagon (J308), 1.4	A 14 XER/LDD	9158589	5.0	10.03	39.0	F	S06
8039.105	IN-EX	ESPERO (KLEJ), 1.8	C18LE		7.0	11.03	45.8	A1	S06
8039.105	IN-EX	ESPERO (KLEJ), 1.8	C18LE		7.0	11.03	45.8	A1	S06
8039.105	IN-EX	ESPERO (KLEJ), 2.0	C20LE		7.0	11.03	45.8	A1	S06
8080.104	IN-EX	ESPERO 1.5i 16V	A15MF	96103034	6.0	11.05	40.1	A	S03
8137.605	IN-EX	EVANDA (KLAL), 2.0	L88/X 20 SED	90502079	6.0	10.03	45.0	F	S06

(D1) Internal diameter, (D2) External diameter, (B) Shape, (C) Material

VALVE GUIDES

CHEVROLET-DAEWOO

IVT Ref.	Type	Model	Engine	OEM Ref.	D1	D2	Length	B	C
8137.605	IN-EX	EVANDA (KLAL), 2.0	L88/X 20 SED	90502181	6.0	10.03	45.0	F	S06
8137.605	IN-EX	EVANDA, 2.0	X 20 SED	90502079	6.0	10.03	45.0	F	S06
8137.605	IN-EX	EVANDA, 2.0	X 20 SED	90502181	6.0	10.03	45.0	F	S06
8080.104	IN-EX	KALOS 1.6i 16V	A16DMS	96103034	6.0	11.05	40.1	A	S03
8185.600	IN-EX	KORANDO (KJ), 2.3	M 161.970	1110531029	7.0	12.56	37.5	F	G1
8185.600	IN-EX	KORANDO (KJ), 2.3	M 161.970	6060530230	7.0	12.56	37.5	F	G1
8168.600	IN	KORANDO (KJ), 2.9 TD	MB-OM 601 29TD	6010500624	8.0	14.03	39.5	F-1	G
8168.600	IN	KORANDO (KJ), 2.9 TD	MB-OM 601 29TD	6010500824	8.0	14.03	39.5	F-1	G
8185.600	IN-EX	KORANDO (KJ), 3.2 4x4	M 104.995	1110531029	7.0	12.56	37.5	F	G1
8185.600	IN-EX	KORANDO (KJ), 3.2 4x4	M 104.995	6060530230	7.0	12.56	37.5	F	G1
8185.600	IN-EX	KORANDO Cabrio (KJ), 2.0 16V	M 161.950	1110531029	7.0	12.56	37.5	F	G1
8185.600	IN-EX	KORANDO Cabrio (KJ), 2.0 16V	M 161.950	6060530230	7.0	12.56	37.5	F	G1
8137.605	IN-EX	KORANDO Cabrio (KJ), 2.0 16V	M 161.950	90502079	6.0	10.03	45.0	F	S06
8137.605	IN-EX	KORANDO Cabrio (KJ), 2.0 16V	M 161.950	90502181	6.0	10.03	45.0	F	S06
8185.600	IN-EX	KORANDO Cabrio (KJ), 2.3	M 161.970	1110531029	7.0	12.56	37.5	F	G1
8185.600	IN-EX	KORANDO Cabrio (KJ), 2.3	M 161.970	6060530230	7.0	12.56	37.5	F	G1
8168.600	IN	KORANDO Cabrio (KJ), 2.9 TD	MB-OM 601 29TD	6010500624	8.0	14.03	39.5	F-1	G
8168.600	IN	KORANDO Cabrio (KJ), 2.9 TD	MB-OM 601 29TD	6010500824	8.0	14.03	39.5	F-1	G
8137.605	IN-EX	LACETTI (J200), 1.6	F16D3	90502079	6.0	10.03	45.0	F	S06
8137.605	IN-EX	LACETTI (J200), 1.6	F16D3	90502181	6.0	10.03	45.0	F	S06
8137.605	IN-EX	LACETTI (J200), 1.8	T18SED	90502079	6.0	10.03	45.0	F	S06
8137.605	IN-EX	LACETTI (J200), 1.8	T18SED	90502181	6.0	10.03	45.0	F	S06
8080.104	IN-EX	LACETTI 1.6i 16V	A16DMS	96103034	6.0	11.05	40.1	A	S03
8137.605	IN-EX	LACETTI Schrägheck (KLAN), 1.6	F16D3	90502079	6.0	10.03	45.0	F	S06
8137.605	IN-EX	LACETTI Schrägheck (KLAN), 1.6	F16D3	90502181	6.0	10.03	45.0	F	S06
8137.605	IN-EX	LACETTI Schrägheck (KLAN), 1.8	T18SED	90502079	6.0	10.03	45.0	F	S06
8137.605	IN-EX	LACETTI Schrägheck (KLAN), 1.8	T18SED	90502181	6.0	10.03	45.0	F	S06
8042.104	IN-EX	LANOS (KLAT), 1.4	A14SMS	96350913	5.0	10.03	39.0	F	S06
8080.104	IN-EX	LANOS 1.6i 16V	A16DMS	96103034	6.0	11.05	40.1	A	S03
8042.104	IN-EX	LANOS Stufenheck (KLAT), 1.4	A14SMS	96350913	5.0	10.03	39.0	F	S06
8137.605	IN-EX	LEGANZA (KLAV), 2.0 16V	T20SED	90502079	6.0	10.03	45.0	F	S06
8137.605	IN-EX	LEGANZA (KLAV), 2.0 16V	T20SED	90502181	6.0	10.03	45.0	F	S06
8137.605	IN-EX	LEGANZA (KLAV), 2.0 16V	X 20 SED	90502079	6.0	10.03	45.0	F	S06
8137.605	IN-EX	LEGANZA (KLAV), 2.0 16V	X 20 SED	90502181	6.0	10.03	45.0	F	S06
8137.605	IN-EX	LEGANZA (KLAV), 2.2 16V	T22SED	90502079	6.0	10.03	45.0	F	S06
8137.605	IN-EX	LEGANZA (KLAV), 2.2 16V	T22SED	90502181	6.0	10.03	45.0	F	S06
8168.600	IN	MUSSO (FJ), 2.2 TD	MB OM 601	6010500624	8.0	14.03	39.5	F-1	G
8168.600	IN	MUSSO (FJ), 2.2 TD	MB OM 601	6010500824	8.0	14.03	39.5	F-1	G
8185.600	IN-EX	MUSSO (FJ), 2.3	M 111.970	1110531029	7.0	12.56	37.5	F	G1
8185.600	IN-EX	MUSSO (FJ), 2.3	M 111.970	6060530230	7.0	12.56	37.5	F	G1
8168.600	IN	MUSSO (FJ), 2.9 TD 4x4	MB-OM 601 29TD	6010500624	8.0	14.03	39.5	F-1	G
8168.600	IN	MUSSO (FJ), 2.9 TD 4x4	MB-OM 601 29TD	6010500824	8.0	14.03	39.5	F-1	G
8185.600	IN-EX	MUSSO (FJ), 3.2 4x4	M 104.992	1110531029	7.0	12.56	37.5	F	G1
8185.600	IN-EX	MUSSO (FJ), 3.2 4x4	M 104.992	6060530230	7.0	12.56	37.5	F	G1
8137.605	IN-EX	NEXIA (KLETN), 1.5	G15MF	90502079	6.0	10.03	45.0	F	S06
8137.605	IN-EX	NEXIA (KLETN), 1.5	G15MF	90502181	6.0	10.03	45.0	F	S06
8080.104	IN-EX	NEXIA 1.5i 16V	A15MF	96103034	6.0	11.05	40.1	A	S03
8137.605	IN-EX	NEXIA Stufenheck (KLETN), 1.5	G15MF	90502079	6.0	10.03	45.0	F	S06
8137.605	IN-EX	NEXIA Stufenheck (KLETN), 1.5	G15MF	90502181	6.0	10.03	45.0	F	S06
8137.605	IN-EX	NUBIRA (KLAJ), 2.0 16V	X 20 SED/Z20L	90502079	6.0	10.03	45.0	F	S06
8137.605	IN-EX	NUBIRA (KLAJ), 2.0 16V	X 20 SED/Z20L	90502181	6.0	10.03	45.0	F	S06
8080.104	IN-EX	NUBIRA 1.6i 16V	A16DMS	96103034	6.0	11.05	40.1	A	S03
8137.605	IN-EX	NUBIRA Kombi, 1.6	F16D3	90502079	6.0	10.03	45.0	F	S06
8137.605	IN-EX	NUBIRA Kombi, 1.6	F16D3	90502181	6.0	10.03	45.0	F	S06
8137.605	IN-EX	NUBIRA Kombi, 1.8	T18SED	90502079	6.0	10.03	45.0	F	S06
8137.605	IN-EX	NUBIRA Kombi, 1.8	T18SED	90502181	6.0	10.03	45.0	F	S06
8137.605	IN-EX	NUBIRA Stufenheck (KLAJ), 1.6 1	A16DMS	90502079	6.0	10.03	45.0	F	S06
8137.605	IN-EX	NUBIRA Stufenheck (KLAJ), 1.6 1	A16DMS	90502181	6.0	10.03	45.0	F	S06
8137.605	IN-EX	NUBIRA Stufenheck (KLAJ), 2.0 1	T20SED	90502079	6.0	10.03	45.0	F	S06
8137.605	IN-EX	NUBIRA Stufenheck (KLAJ), 2.0 1	T20SED	90502181	6.0	10.03	45.0	F	S06
8137.605	IN-EX	NUBIRA Stufenheck (KLAJ), 2.0 1	X 20 SED	90502079	6.0	10.03	45.0	F	S06
8137.605	IN-EX	NUBIRA Stufenheck (KLAJ), 2.0 1	X 20 SED	90502181	6.0	10.03	45.0	F	S06

(D1) Internal diameter, (D2) External diameter, (B) Shape, (C) Material

VALVE GUIDES

IVT Ref.	Type	Model	Engine	OEM Ref.	D1	D2	Length	B	C
CHEVROLET-DAEWOO									
8137.605	IN-EX	NUBIRA Stufenheck (KLAN), 1.8	T18SED	90502079	6.0	10.03	45.0	F	S06
8137.605	IN-EX	NUBIRA Stufenheck (KLAN), 1.8	T18SED	90502181	6.0	10.03	45.0	F	S06
8137.605	IN-EX	NUBIRA Stufenheck, 1.6	F16D3	90502079	6.0	10.03	45.0	F	S06
8137.605	IN-EX	NUBIRA Stufenheck, 1.6	F16D3	90502181	6.0	10.03	45.0	F	S06
8137.605	IN-EX	NUBIRA Stufenheck, 1.8	T18SED	90502079	6.0	10.03	45.0	F	S06
8137.605	IN-EX	NUBIRA Stufenheck, 1.8	T18SED	90502181	6.0	10.03	45.0	F	S06
8137.605	IN-EX	NUBIRA Wagon (KLAJ), 2.0 16V	T20SED	90502079	6.0	10.03	45.0	F	S06
8137.605	IN-EX	NUBIRA Wagon (KLAJ), 2.0 16V	T20SED	90502181	6.0	10.03	45.0	F	S06
8137.605	IN-EX	NUBIRA Wagon (KLAJ), 2.0 16V	X 20 SED	90502079	6.0	10.03	45.0	F	S06
8137.605	IN-EX	NUBIRA Wagon (KLAJ), 2.0 16V	X 20 SED	90502181	6.0	10.03	45.0	F	S06
8137.605	IN-EX	NUBIRA Wagon (KLAN), 1.8	T18SED	90502079	6.0	10.03	45.0	F	S06
8137.605	IN-EX	NUBIRA Wagon (KLAN), 1.8	T18SED	90502181	6.0	10.03	45.0	F	S06
8186.105	IN-EX	ORLANDO (J309), 2.0 D	Z 20 D1	55210016	5.0	10.03	46.7	A	S06
8186.105	IN-EX	ORLANDO (J309), 2.0 D	Z 20 D1	55210016	5.0	10.03	46.7	A	S06
8080.104	IN-EX	RACER 1.5i 16V	A15MF	96103034	6.0	11.05	40.1	A	S03
8168.600	IN	REXTON (GAB_), 2.9 TD	OM 662.983	6010500624	8.0	14.03	39.5	F-1	G
8168.600	IN	REXTON (GAB_), 2.9 TD	OM 662.983	6010500824	8.0	14.03	39.5	F-1	G
8185.600	IN-EX	REXTON (GAB_), 3.2 V6	M 162.992	1110531029	7.0	12.56	37.5	F	G1
8185.600	IN-EX	REXTON (GAB_), 3.2 V6	M 162.992	6060530230	7.0	12.56	37.5	F	G1
8080.104	IN-EX	REZZO 1.6i 16V	A16DMS	96103034	6.0	11.05	40.1	A	S03
8020.100	IN-EX	TACUMA (KLAU), 1.8	A18DMS		7.0	11.03	45.8	A1	G
8039.105	IN-EX	TACUMA (KLAU), 1.8	A18DMS		7.0	11.03	45.8	A1	S06
8137.605	IN-EX	TACUMA (KLAU), 1.8	F18S2	90502079	6.0	10.03	45.0	F	S06
8137.605	IN-EX	TACUMA (KLAU), 1.8	F18S2	90502181	6.0	10.03	45.0	F	S06
8137.605	IN-EX	TACUMA (KLAU), 2.0	T20SED	90502079	6.0	10.03	45.0	F	S06
8137.605	IN-EX	TACUMA (KLAU), 2.0	T20SED	90502181	6.0	10.03	45.0	F	S06
8137.605	IN-EX	TACUMA (KLAU), 2.0	X 20 SED	90502079	6.0	10.03	45.0	F	S06
8137.605	IN-EX	TACUMA (KLAU), 2.0	X 20 SED	90502181	6.0	10.03	45.0	F	S06
8080.104	IN-EX	TACUMA 16.i 16V	A16DMS	96103034	6.0	11.05	40.1	A	S03
8137.605	IN-EX	TACUMA, 2.0	T20SED	90502079	6.0	10.03	45.0	F	S06
8137.605	IN-EX	TACUMA, 2.0	T20SED	90502079	6.0	10.03	45.0	F	S06
8137.605	IN-EX	TACUMA, 2.0	T20SED	90502181	6.0	10.03	45.0	F	S06
8137.605	IN-EX	TACUMA, 2.0	T20SED	90502181	6.0	10.03	45.0	F	S06
CHRYSLER									
8215.104	IN-EX	NEON II, 1.6	EJD		6.0	11.05	41.0	A	S03
8215.104	IN-EX	PT CRUISER (PT_), 1.6	EJD		6.0	11.05	41.0	A	S03
8161.604	IN-EX	PT CRUISER (PT_), 2.2 CRD	EDJ	05080044AB	7.0	12.56	37.5	F	S03
8170.601	IN-EX	SEBRING (JS), 2.0 CRD	ECD		6.0	10.06	42.0	F	B
8170.601	IN-EX	SEBRING Cabriolet (JS), 2.0 CRD	ECD		6.0	10.06	42.0	F	B
CITROEN									
8159.601	IN-EX	AX (ZA-_), 1.4 GTi	KFY (TU3FJ2)	9456069680	7.0	13.06	47.6	F	B
8159.601	IN-EX	AX (ZA-_), 1.4 GTi	KFZ (TU3FJ2)	9456069680	7.0	13.06	47.6	F	B
8159.601	IN-EX	AX (ZA-_), 1.4 GTi	KFZ (TU3FJ2)	9456069680	7.0	13.06	47.6	F	B
8159.601	IN-EX	AX (ZA-_), 10	C1A	9456069680	7.0	13.06	47.6	F	B
8159.601	IN-EX	AX (ZA-_), 10	CDY (TU9M)	9456069680	7.0	13.06	47.6	F	B
8159.601	IN-EX	AX (ZA-_), 10	CDZ (TU9M)	9456069680	7.0	13.06	47.6	F	B
8159.601	IN-EX	AX (ZA-_), 11	H1A/H1B	9456069680	7.0	13.06	47.6	F	B
8159.601	IN-EX	AX (ZA-_), 11	HDZ (TU1M)/H1B	9456069680	7.0	13.06	47.6	F	B
8159.601	IN-EX	AX (ZA-_), 11 4x4	H1A	9456069680	7.0	13.06	47.6	F	B
8159.601	IN-EX	AX (ZA-_), 11 KAT	HAZ (TU1CP)	9456069680	7.0	13.06	47.6	F	B
8159.601	IN-EX	AX (ZA-_), 14	K1F	9456069680	7.0	13.06	47.6	F	B
8159.601	IN-EX	AX (ZA-_), 14	K2B/K2A	9456069680	7.0	13.06	47.6	F	B
8159.601	IN-EX	AX (ZA-_), 14	KAY (TU3CP)	9456069680	7.0	13.06	47.6	F	B
8159.601	IN-EX	AX (ZA-_), 14	KDY (TU3FM)/KDZ (TU3M/Z)	9456069680	7.0	13.06	47.6	F	B
8159.601	IN-EX	AX (ZA-_), 14 4x4	KDY (TU3FM)/KDZ (TU3M/Z)	9456069680	7.0	13.06	47.6	F	B
8111.600	IN-EX	AX 1.4 GTi	KFY (TU3J2)	22059	7.0	13.06	47.5	F	G
8111.600	IN-EX	AX 1.4 GTi	KFZ (TU3FJ2)	22059	7.0	13.06	47.5	F	G
8111.600	IN-EX	AX 11	H1A	22059	7.0	13.06	47.5	F	G
8111.600	IN-EX	AX 11	H1B	22059	7.0	13.06	47.5	F	G
8111.600	IN-EX	AX 11	HDZ (TU1M)	22059	7.0	13.06	47.5	F	G

(D1) Internal diameter, (D2) External diameter, (B) Shape, (C) Material

VALVE GUIDES

CITROEN

IVT Ref.	Type	Model	Engine	OEM Ref.	D1	D2	Length	B	C
8111.600	IN-EX	AX 11 4x4	H1A	22059	7.0	13.06	47.5	F	G
8111.600	IN-EX	AX 11 Catalizzato	HAZ (TU1CP)	22059	7.0	13.06	47.5	F	G
8111.600	IN-EX	AX 14	K1A	22059	7.0	13.06	47.5	F	G
8111.600	IN-EX	AX 14	K1F	22059	7.0	13.06	47.5	F	G
8111.600	IN-EX	AX 14	K2A	22059	7.0	13.06	47.5	F	G
8111.600	IN-EX	AX 14	K2B	22059	7.0	13.06	47.5	F	G
8111.600	IN-EX	AX 14	KAY (TU3CP)	22059	7.0	13.06	47.5	F	G
8111.600	IN-EX	AX 14	KDX (TU3M/Z)	22059	7.0	13.06	47.5	F	G
8111.600	IN-EX	AX 14	KDY (TU3FM)	22059	7.0	13.06	47.5	F	G
8111.600	IN-EX	AX 14	KDY (TU3M)	22059	7.0	13.06	47.5	F	G
8111.600	IN-EX	AX 14	KDZ (TU3M/Z)	22059	7.0	13.06	47.5	F	G
8111.600	IN-EX	AX 14 4x4	KDX (TU3M/Z)	22059	7.0	13.06	47.5	F	G
8111.600	IN-EX	AX 14 4x4	KDY (TU3FM)	22059	7.0	13.06	47.5	F	G
8111.600	IN-EX	AX 14 4x4	KDY (TU3M)	22059	7.0	13.06	47.5	F	G
8111.600	IN-EX	AX 14 4x4	KDZ (TU3M/Z)	22059	7.0	13.06	47.5	F	G
8165.104	IN-EX	BERLINGO (B9), 1.6 BlueHDi 75	BHW (DV6FE)/9HN (DV6ET	0220A6	5.5	9.55	34.0	A	S03
8165.104	IN-EX	BERLINGO (B9), 1.6 HDi 110	9HR (DV6C)/9HL (DV6C)	0220A6	5.5	9.55	34.0	A	S03
8165.104	IN-EX	BERLINGO (B9), 1.6 HDi 110	9HZ (DV6TED4)	0220A6	5.5	9.55	34.0	A	S03
8165.104	IN-EX	BERLINGO (B9), 1.6 HDi 75	9HT (DV6BTED4)	0220A6	5.5	9.55	34.0	A	S03
8165.104	IN-EX	BERLINGO (B9), 1.6 HDi 90	9HX (DV6ATED4)	0220A6	5.5	9.55	34.0	A	S03
8165.104	IN-EX	BERLINGO (B9), 1.6 HDi 90	9HX (DV6ATED4)/9HP (DV6	0220A6	5.5	9.55	34.0	A	S03
8159.601	IN-EX	BERLINGO (MF), 1.1 i (MFHDZ,	HDZ (TU1M)/HFX (TU1JP)	9456069680	7.0	13.06	47.6	F	B
8159.601	IN-EX	BERLINGO (MF), 1.4 i (MFKFX,	KFX (TU3JP)/KFW (TU3JP)	9456069680	7.0	13.06	47.6	F	B
8159.601	IN-EX	BERLINGO (MF), 1.4 i bivalent (M	KFW (TU3JP)	9456069680	7.0	13.06	47.6	F	B
8165.104	IN-EX	BERLINGO (MF), 1.6 HDI 75 (MF	9HW (DV6BTED4)/DV6B	0220A6	5.5	9.55	34.0	A	S03
8165.104	IN-EX	BERLINGO (MF), 1.6 HDI 90 (MF	9HX (DV6ATED4)	0220A6	5.5	9.55	34.0	A	S03
8134.601	IN-EX	BERLINGO (MF), 1.8 i (MFLFX)	LFX (XU7JB)	022072	8.0	13.07	45.0	F	B
8134.601	IN-EX	BERLINGO (MF), 1.8 i (MFLFX)	LFX (XU7JB)	022118	8.0	13.07	45.0	F	B
8134.601	IN-EX	BERLINGO (MF), 1.8 i 4WD (MFL	LFX (XU7JB)	022072	8.0	13.07	45.0	F	B
8134.601	IN-EX	BERLINGO (MF), 1.8 i 4WD (MFL	LFX (XU7JB)	022118	8.0	13.07	45.0	F	B
8111.600	IN-EX	Berlingo 1.1i	HDZ (TU1M)	22059	7.0	13.06	47.5	F	G
8111.600	IN-EX	Berlingo 1.1i	HFX (TU1JP)	22059	7.0	13.06	47.5	F	G
8111.600	IN-EX	Berlingo 1.4i	KFX (TU3JP)	22059	7.0	13.06	47.5	F	G
8117.601	IN-EX	Berlingo 1.6 16V	NFU (TU5JP4)	22095	6.0	11.11	40.0	F	B
8111.600	IN-EX	Berlingo Furgonato 1.1i	KDZ (TU3M/Z)	22059	7.0	13.06	47.5	F	G
8111.600	IN-EX	Berlingo Furgonato 1.1i	KFX (TU3JP)	22059	7.0	13.06	47.5	F	G
8111.600	IN-EX	Berlingo Furgonato 1.4i	KFX (TU3JP)	22059	7.0	13.06	47.5	F	G
8117.601	IN-EX	Berlingo Furgonato 1.6 16V	NFU (TU5JP4)	22095	6.0	11.11	40.0	F	B
8165.104	IN-EX	BERLINGO Kasten (B9), 1.6 Blue	BHW (DV6FE)/9HN (DV6ET	0220A6	5.5	9.55	34.0	A	S03
8165.104	IN-EX	BERLINGO Kasten (B9), 1.6 HDi	9HZ (DV6TED4)	0220A6	5.5	9.55	34.0	A	S03
8165.104	IN-EX	BERLINGO Kasten (B9), 1.6 HDi	9HT (DV6BUTED4)	0220A6	5.5	9.55	34.0	A	S03
8165.104	IN-EX	BERLINGO Kasten (B9), 1.6 HDi	9HX (DV6ATED4)/9HS (DV6	0220A6	5.5	9.55	34.0	A	S03
8159.601	IN-EX	BERLINGO Kasten (M_), 1.4 i (M	KFX (TU3JP)/KFW (TU3JP)	9456069680	7.0	13.06	47.6	F	B
8159.601	IN-EX	BERLINGO Kasten (M_), 1.4 i biv	KFW (TU3JP)	9456069680	7.0	13.06	47.6	F	B
8165.104	IN-EX	BERLINGO Kasten (M_), 1.6 HDI	9HW (DV6BTED4)/DV6B	0220A6	5.5	9.55	34.0	A	S03
8165.104	IN-EX	BERLINGO Kasten (M_), 1.6 HDI	9HX (DV6ATED4)	0220A6	5.5	9.55	34.0	A	S03
8134.601	IN-EX	BERLINGO Kasten (M_), 1.8 i	LFX (XU7JB)	022072	8.0	13.07	45.0	F	B
8134.601	IN-EX	BERLINGO Kasten (M_), 1.8 i	LFX (XU7JB)	022118	8.0	13.07	45.0	F	B
8178.601	IN-EX	BERLINGO Kasten (M_), 1.9 D (M	AJZ (XUD7TE)/A8A (XUD7T	22075	8.0	14.05	48.0	F	B
8178.601	IN-EX	BERLINGO Kasten (M_), 1.9 D (M	AJZ (XUD7TE)/A8A (XUD7T	22076	8.0	14.05	48.0	F	B
8165.104	IN-EX	BERLINGO Pritsche/Fahrgestell (	9HX (DV6ATED4)	0220A6	5.5	9.55	34.0	A	S03
8159.601	IN-EX	BX (XB-_), 11	HDZ (TU1M)	9456069680	7.0	13.06	47.6	F	B
8159.601	IN-EX	BX (XB-_), 14	K1H (TU3A)	9456069680	7.0	13.06	47.6	F	B
8159.601	IN-EX	BX (XB-_), 14	KDZ (TU3M/Z)/KDY (TU3M)	9456069680	7.0	13.06	47.6	F	B
8154.601	IN-EX	BX (XB-_), 14 E	150C	022119	7.0	12.07	40.0	F	B
8154.601	IN-EX	BX (XB-_), 14 E	150C/K1G	022119	7.0	12.07	40.0	F	B
8159.601	IN-EX	BX (XB-_), 14 E	150F	9456069680	7.0	13.06	47.6	F	B
8134.601	IN-EX	BX (XB-_), 15	B1E (XU51C)	022072	8.0	13.07	45.0	F	B
8134.601	IN-EX	BX (XB-_), 15	B1E (XU51C)	022118	8.0	13.07	45.0	F	B
8131.600	IN-EX	BX (XB-_), 15	B1E (XU51C)	7701461009	8.0	13.07	45.0	F	G
8134.601	IN-EX	BX (XB-_), 16	171B/171A/171C	022072	8.0	13.07	45.0	F	B
8134.601	IN-EX	BX (XB-_), 16	171B/171A/171C	022118	8.0	13.07	45.0	F	B

(D1) Internal diameter, (D2) External diameter, (B) Shape, (C) Material

VALVE GUIDES

CITROEN

IVT Ref.	Type	Model	Engine	OEM Ref.	D1	D2	Length	B	C
8134.601	IN-EX	BX (XB-_), 16	171D	022072	8.0	13.07	45.0	F	B
8134.601	IN-EX	BX (XB-_), 16	171D	022118	8.0	13.07	45.0	F	B
8134.601	IN-EX	BX (XB-_), 16	180Z	022072	8.0	13.07	45.0	F	B
8134.601	IN-EX	BX (XB-_), 16	180Z	022118	8.0	13.07	45.0	F	B
8134.601	IN-EX	BX (XB-_), 16	B1E (XU51C)	022072	8.0	13.07	45.0	F	B
8134.601	IN-EX	BX (XB-_), 16	B1E (XU51C)	022118	8.0	13.07	45.0	F	B
8131.600	IN-EX	BX (XB-_), 16	B1E (XU51C)	7701461009	8.0	13.07	45.0	F	G
8134.601	IN-EX	BX (XB-_), 16	BAZ (XU5CP)/BAY (XU5CP)	022072	8.0	13.07	45.0	F	B
8134.601	IN-EX	BX (XB-_), 16	BAZ (XU5CP)/BAY (XU5CP)	022118	8.0	13.07	45.0	F	B
8134.601	IN-EX	BX (XB-_), 16	XU52C	022072	8.0	13.07	45.0	F	B
8134.601	IN-EX	BX (XB-_), 16	XU52C	022118	8.0	13.07	45.0	F	B
8134.601	IN-EX	BX (XB-_), 16 E	BDY (XU5M)/BDZ (XU5M)	022072	8.0	13.07	45.0	F	B
8134.601	IN-EX	BX (XB-_), 16 E	BDY (XU5M)/BDZ (XU5M)	022118	8.0	13.07	45.0	F	B
8134.601	IN-EX	BX (XB-_), 19	159A	022072	8.0	13.07	45.0	F	B
8134.601	IN-EX	BX (XB-_), 19	159A	022118	8.0	13.07	45.0	F	B
8131.600	IN-EX	BX (XB-_), 19	159A	7701461009	8.0	13.07	45.0	F	G
8134.601	IN-EX	BX (XB-_), 19	D2A (XU92C)	022072	8.0	13.07	45.0	F	B
8134.601	IN-EX	BX (XB-_), 19	D2A (XU92C)	022118	8.0	13.07	45.0	F	B
8131.600	IN-EX	BX (XB-_), 19	D2A (XU92C)	7701461009	8.0	13.07	45.0	F	G
8134.601	IN-EX	BX (XB-_), 19	D2C (XU92C)	022072	8.0	13.07	45.0	F	B
8134.601	IN-EX	BX (XB-_), 19	D2C (XU92C)	022118	8.0	13.07	45.0	F	B
8131.600	IN-EX	BX (XB-_), 19	D2C (XU92C)	7701461009	8.0	13.07	45.0	F	G
8178.601	IN-EX	BX (XB-_), 19 D	D9B (XUD9A/U)	22075	8.0	14.05	48.0	F	B
8178.601	IN-EX	BX (XB-_), 19 D	D9B (XUD9A/U)	22076	8.0	14.05	48.0	F	B
8178.601	IN-EX	BX (XB-_), 19 D	DJZ (XUD9Y)/D9A (XUD9)/1	22075	8.0	14.05	48.0	F	B
8178.601	IN-EX	BX (XB-_), 19 D	DJZ (XUD9Y)/D9A (XUD9)/1	22076	8.0	14.05	48.0	F	B
8134.601	IN-EX	BX (XB-_), 19 E	DDZ (XU9M)	022072	8.0	13.07	45.0	F	B
8134.601	IN-EX	BX (XB-_), 19 E	DDZ (XU9M)	022118	8.0	13.07	45.0	F	B
8134.601	IN-EX	BX (XB-_), 19 E 4x4	D2F	022072	8.0	13.07	45.0	F	B
8134.601	IN-EX	BX (XB-_), 19 E 4x4	D2F	022118	8.0	13.07	45.0	F	B
8134.601	IN-EX	BX (XB-_), 19 GTi	D6A (XU9J2)	022072	8.0	13.07	45.0	F	B
8134.601	IN-EX	BX (XB-_), 19 GTi	D6A (XU9J2)	022118	8.0	13.07	45.0	F	B
8131.600	IN-EX	BX (XB-_), 19 GTi	D6A (XU9J2)	7701461009	8.0	13.07	45.0	F	G
8134.601	IN-EX	BX (XB-_), 19 GTi	DKZ (XU9JA)	022072	8.0	13.07	45.0	F	B
8134.601	IN-EX	BX (XB-_), 19 GTi	DKZ (XU9JA)	022118	8.0	13.07	45.0	F	B
8131.600	IN-EX	BX (XB-_), 19 GTi	DKZ (XU9JA)	7701461009	8.0	13.07	45.0	F	G
8154.601	IN-EX	BX (XB-_), 19 GTi 16V	D6C (XU9J4)	022119	7.0	12.07	40.0	F	B
8154.601	IN-EX	BX (XB-_), 19 GTi 16V	DFW (XU9J4)	022119	7.0	12.07	40.0	F	B
8134.601	IN-EX	BX (XB-_), 19 GTi 4x4	DKZ (XU9JA)	022072	8.0	13.07	45.0	F	B
8134.601	IN-EX	BX (XB-_), 19 GTi 4x4	DKZ (XU9JA)	022118	8.0	13.07	45.0	F	B
8131.600	IN-EX	BX (XB-_), 19 GTi 4x4	DKZ (XU9JA)	7701461009	8.0	13.07	45.0	F	G
8178.601	IN-EX	BX (XB-_), TRD Turbo	DJZ (XUD9Y)/D9A (XUD9)/1	22075	8.0	14.05	48.0	F	B
8178.601	IN-EX	BX (XB-_), TRD Turbo	DJZ (XUD9Y)/D9A (XUD9)/1	22076	8.0	14.05	48.0	F	B
8111.600	IN-EX	BX 14	K1H (TU3A)	22059	7.0	13.06	47.5	F	G
8111.600	IN-EX	BX 14	KDY (TU3M)	22059	7.0	13.06	47.5	F	G
8111.600	IN-EX	BX 14	KDZ (TU3M/Z)	22059	7.0	13.06	47.5	F	G
8111.600	IN-EX	BX 14 E	150F	22059	7.0	13.06	47.5	F	G
8111.600	IN-EX	BX 14 E	K1G	22059	7.0	13.06	47.5	F	G
8154.601	IN-EX	BX Break (XB-_), 1.4	150C	022119	7.0	12.07	40.0	F	B
8178.601	IN-EX	BX Break (XB-_), 1.9 D	D8B (XUD9TF)	22075	8.0	14.05	48.0	F	B
8178.601	IN-EX	BX Break (XB-_), 1.9 D	D8B (XUD9TF)	22076	8.0	14.05	48.0	F	B
8154.601	IN-EX	BX Break (XB-_), 14	150C	022119	7.0	12.07	40.0	F	B
8159.601	IN-EX	BX Break (XB-_), 14	K1H (TU3A)	9456069680	7.0	13.06	47.6	F	B
8159.601	IN-EX	BX Break (XB-_), 14	KDY (TU3M)	9456069680	7.0	13.06	47.6	F	B
8134.601	IN-EX	BX Break (XB-_), 15	B1E (XU51C)	022072	8.0	13.07	45.0	F	B
8134.601	IN-EX	BX Break (XB-_), 15	B1E (XU51C)	022118	8.0	13.07	45.0	F	B
8131.600	IN-EX	BX Break (XB-_), 15	B1E (XU51C)	7701461009	8.0	13.07	45.0	F	G
8134.601	IN-EX	BX Break (XB-_), 16	171B/171A/171C	022072	8.0	13.07	45.0	F	B
8134.601	IN-EX	BX Break (XB-_), 16	171B/171A/171C	022118	8.0	13.07	45.0	F	B
8134.601	IN-EX	BX Break (XB-_), 16	171C	022072	8.0	13.07	45.0	F	B
8134.601	IN-EX	BX Break (XB-_), 16	171C	022118	8.0	13.07	45.0	F	B
8134.601	IN-EX	BX Break (XB-_), 16	171D	022072	8.0	13.07	45.0	F	B

(D1) Internal diameter, (D2) External diameter, (B) Shape, (C) Material

VALVE GUIDES

CITROEN

IVT Ref.	Type	Model	Engine	OEM Ref.	D1	D2	Length	B	C
8134.601	IN-EX	BX Break (XB-_), 16	171D	022118	8.0	13.07	45.0	F	B
8134.601	IN-EX	BX Break (XB-_), 16	180Z	022072	8.0	13.07	45.0	F	B
8134.601	IN-EX	BX Break (XB-_), 16	180Z	022118	8.0	13.07	45.0	F	B
8134.601	IN-EX	BX Break (XB-_), 16	B1E (XU51C)	022072	8.0	13.07	45.0	F	B
8134.601	IN-EX	BX Break (XB-_), 16	B1E (XU51C)	022118	8.0	13.07	45.0	F	B
8131.600	IN-EX	BX Break (XB-_), 16	B1E (XU51C)	7701461009	8.0	13.07	45.0	F	G
8134.601	IN-EX	BX Break (XB-_), 16	BAZ (XU5CP)/BAY (XU5CP)	022072	8.0	13.07	45.0	F	B
8134.601	IN-EX	BX Break (XB-_), 16	BAZ (XU5CP)/BAY (XU5CP)	022118	8.0	13.07	45.0	F	B
8134.601	IN-EX	BX Break (XB-_), 16	BDY (XU5M)/BDZ (XU5M)	022072	8.0	13.07	45.0	F	B
8134.601	IN-EX	BX Break (XB-_), 16	BDY (XU5M)/BDZ (XU5M)	022118	8.0	13.07	45.0	F	B
8134.601	IN-EX	BX Break (XB-_), 19	D2A (XU92C)	022072	8.0	13.07	45.0	F	B
8134.601	IN-EX	BX Break (XB-_), 19	D2A (XU92C)	022118	8.0	13.07	45.0	F	B
8131.600	IN-EX	BX Break (XB-_), 19	D2A (XU92C)	7701461009	8.0	13.07	45.0	F	G
8134.601	IN-EX	BX Break (XB-_), 19	D2C (XU92C)	022072	8.0	13.07	45.0	F	B
8134.601	IN-EX	BX Break (XB-_), 19	D2C (XU92C)	022118	8.0	13.07	45.0	F	B
8131.600	IN-EX	BX Break (XB-_), 19	D2C (XU92C)	7701461009	8.0	13.07	45.0	F	G
8134.601	IN-EX	BX Break (XB-_), 19	DDZ (XU9M)	022072	8.0	13.07	45.0	F	B
8134.601	IN-EX	BX Break (XB-_), 19	DDZ (XU9M)	022118	8.0	13.07	45.0	F	B
8134.601	IN-EX	BX Break (XB-_), 19	DKZ (XU9JA)	022072	8.0	13.07	45.0	F	B
8134.601	IN-EX	BX Break (XB-_), 19	DKZ (XU9JA)	022118	8.0	13.07	45.0	F	B
8131.600	IN-EX	BX Break (XB-_), 19	DKZ (XU9JA)	7701461009	8.0	13.07	45.0	F	G
8134.601	IN-EX	BX Break (XB-_), 19 4x4	DDZ (XU9M)	022072	8.0	13.07	45.0	F	B
8134.601	IN-EX	BX Break (XB-_), 19 4x4	DDZ (XU9M)	022118	8.0	13.07	45.0	F	B
8178.601	IN-EX	BX Break (XB-_), 19 D	AJZ (XUD7TE)/A8A (XUD7T	22075	8.0	14.05	48.0	F	B
8178.601	IN-EX	BX Break (XB-_), 19 D	AJZ (XUD7TE)/A8A (XUD7T	22076	8.0	14.05	48.0	F	B
8178.601	IN-EX	BX Break (XB-_), 19 D	D9B (XUD9A/U)	22075	8.0	14.05	48.0	F	B
8178.601	IN-EX	BX Break (XB-_), 19 D	D9B (XUD9A/U)	22076	8.0	14.05	48.0	F	B
8134.601	IN-EX	BX Break (XB-_), 19 KAT	DFZ (XU9J1)	022072	8.0	13.07	45.0	F	B
8134.601	IN-EX	BX Break (XB-_), 19 KAT	DFZ (XU9J1)	022118	8.0	13.07	45.0	F	B
8131.600	IN-EX	BX Break (XB-_), 19 KAT	DFZ (XU9J1)	7701461009	8.0	13.07	45.0	F	G
8178.601	IN-EX	BX Break (XB-_), TRD Turbo	-	22075	8.0	14.05	48.0	F	B
8178.601	IN-EX	BX Break (XB-_), TRD Turbo	-	22076	8.0	14.05	48.0	F	B
8111.600	IN-EX	BX Break 14	K1H (TU3A)	22059	7.0	13.06	47.5	F	G
8111.600	IN-EX	BX Break 14	KDY (TU3M)	22059	7.0	13.06	47.5	F	G
8165.104	IN-EX	C1 (PM_, PN_), 1.4 HDi	8HT (DV4TD)	0220A6	5.5	9.55	34.0	A	S03
8159.601	IN-EX	C15 (VD-_), 1.0	XV8/TU9	9456069680	7.0	13.06	47.6	F	B
8159.601	IN-EX	C15 (VD-_), 1.1 i	HDZ (TU1M)	9456069680	7.0	13.06	47.6	F	B
8159.601	IN-EX	C15 (VD-_), 1.4	K1H (TU3A)	9456069680	7.0	13.06	47.6	F	B
8159.601	IN-EX	C15 (VD-_), 1.4 i	KDY (TU3FM)/KDY (TU3M)	9456069680	7.0	13.06	47.6	F	B
8111.600	IN-EX	C15 1.1i	KDZ (TU3M/Z)	22059	7.0	13.06	47.5	F	G
8111.600	IN-EX	C15 1.4	K1H (TU3A)	22059	7.0	13.06	47.5	F	G
8111.600	IN-EX	C15 1.4 E	K3A	22059	7.0	13.06	47.5	F	G
8111.600	IN-EX	C15 1.4i	KDY (TU3FM)	22059	7.0	13.06	47.5	F	G
8111.600	IN-EX	C15 1.4i	KDY (TU3M)	22059	7.0	13.06	47.5	F	G
8159.601	IN-EX	C15 Kombi, 1.1	HDZ (TU1M)	9456069680	7.0	13.06	47.6	F	B
8159.601	IN-EX	C15 Kombi, 1.4	-	9456069680	7.0	13.06	47.6	F	B
8159.601	IN-EX	C15 Kombi, 1.4	KDY (TU3M)	9456069680	7.0	13.06	47.6	F	B
8159.601	IN-EX	C2 (JM_), 1.1	HFX (TU1JP)	9456069680	7.0	13.06	47.6	F	B
8159.601	IN-EX	C2 (JM_), 1.4	KFV (TU3JP)	9456069680	7.0	13.06	47.6	F	B
8165.104	IN-EX	C2 (JM_), 1.4 HDi	8HZ (DV4TD)/8HX (DV4TD)	0220A6	5.5	9.55	34.0	A	S03
8165.104	IN-EX	C2 (JM_), 1.6 HDi	9HZ (DV6TED4)	0220A6	5.5	9.55	34.0	A	S03
8111.600	IN-EX	C2 1.1	HFX (TU1JP)	22059	7.0	13.06	47.5	F	G
8117.601	IN-EX	C2 1.6	NFU (TU5JP4)	22095	6.0	11.11	40.0	F	B
8178.601	IN-EX	C25 Bus (280_, 290_), 1.9 D	D9B (XUD9A/U)	22075	8.0	14.05	48.0	F	B
8178.601	IN-EX	C25 Bus (280_, 290_), 1.9 D	D9B (XUD9A/U)	22076	8.0	14.05	48.0	F	B
8159.601	IN-EX	C3 I (FC_), 1.1 i	HFX (TU1A)/HFX (TU1JP)	9456069680	7.0	13.06	47.6	F	B
8165.104	IN-EX	C3 I (FC_), 1.4 16V HDi	8HY (DV4TED4)	0220A6	5.5	9.55	34.0	A	S03
8165.104	IN-EX	C3 I (FC_), 1.4 HDi	8HX (DV4TD)	0220A6	5.5	9.55	34.0	A	S03
8159.601	IN-EX	C3 I (FC_), 1.4 i	KFV (TU3JP)/KFV (TU3A)	9456069680	7.0	13.06	47.6	F	B
8159.601	IN-EX	C3 I (FC_), 1.4 i Bivalent	KFV (TU3JP)	9456069680	7.0	13.06	47.6	F	B
8165.104	IN-EX	C3 I (FC_), 1.6 16V HDi	9HX (DV6ATED4)	0220A6	5.5	9.55	34.0	A	S03
8165.104	IN-EX	C3 I (FC_), 1.6 16V HDi	9HZ (DV6TED4)	0220A6	5.5	9.55	34.0	A	S03

(D1) Internal diameter, (D2) External diameter, (B) Shape, (C) Material

VALVE GUIDES

CITROEN

IVT Ref.	Type	Model	Engine	OEM Ref.	D1	D2	Length	B	C
8111.600	IN-EX	C3 I 1.1	HFX (TU1JP)	22059	7.0	13.06	47.5	F	G
8117.601	IN-EX	C3 I 1.6 16V	NFU (TU5JP4)	22095	6.0	11.11	40.0	F	B
8111.600	IN-EX	C3 II 1.1	HFX (TU1JP)	22059	7.0	13.06	47.5	F	G
8159.601	IN-EX	C3 II, 1.1	HFX (TU1JP)	9456069680	7.0	13.06	47.6	F	B
8165.104	IN-EX	C3 II, 1.4 HDi 70	8HR (DV4C)/8HZ (DV4TD)	0220A6	5.5	9.55	34.0	A	S03
8165.104	IN-EX	C3 II, 1.6 HDi	9HP (DV6DTED)	0220A6	5.5	9.55	34.0	A	S03
8165.104	IN-EX	C3 II, 1.6 HDi 110	9HR (DV6C)	0220A6	5.5	9.55	34.0	A	S03
8165.104	IN-EX	C3 II, 1.6 HDi 90	9HX (DV6ATED4)	0220A6	5.5	9.55	34.0	A	S03
8165.104	IN-EX	C3 Picasso, 1.6 HDi	9HX (DV6ATED4)	0220A6	5.5	9.55	34.0	A	S03
8165.104	IN-EX	C3 Picasso, 1.6 HDi	9HZ (DV6TED4)	0220A6	5.5	9.55	34.0	A	S03
8165.104	IN-EX	C3 Picasso, 1.6 HDi 110	9HR (DV6C)	0220A6	5.5	9.55	34.0	A	S03
8165.104	IN-EX	C3 Picasso, 1.6 HDI 90	9HP (DV6DTED)	0220A6	5.5	9.55	34.0	A	S03
8159.601	IN-EX	C3 Pluriel (HB_), 1.4	KFV (TU3JP)	9456069680	7.0	13.06	47.6	F	B
8165.104	IN-EX	C3 Pluriel (HB_), 1.4 HDi	8HX (DV4TD)	0220A6	5.5	9.55	34.0	A	S03
8117.601	IN-EX	C3 Pluriel 1.6	NFU (TU5JP4)	22095	6.0	11.11	40.0	F	B
8165.104	IN-EX	C4 Coupe (LA_), 1.6 HDi	9HX (DV6ATED4)	0220A6	5.5	9.55	34.0	A	S03
8165.104	IN-EX	C4 Coupe (LA_), 1.6 HDi	9HY (DV6TED4)/9HZ (DV6T	0220A6	5.5	9.55	34.0	A	S03
8127.905	IN-EX	C4 Coupe (LA_), 2.0 16V	RFN (EW10J4)	022124	6.0	12.06	40.8	P	S06
8127.905	IN-EX	C4 Coupe (LA_), 2.0 16V	RFN (EW10J4)	022126	6.0	12.06	40.8	P	S06
8117.601	IN-EX	C4 Coupé 1.6 16V	NFU (TU5JP4)	22095	6.0	11.11	40.0	F	B
8165.104	IN-EX	C4 Grand Picasso I (UA_), 1.6 HD	9HY (DV6TED4)/9HZ (DV6T	0220A6	5.5	9.55	34.0	A	S03
8165.104	IN-EX	C4 Grand Picasso I (UA_), 1.6 HD	9HR (DV6C)/9HL (DV6C)	0220A6	5.5	9.55	34.0	A	S03
8165.104	IN-EX	C4 I (LC_), 1.6 HDi	9HX (DV6ATED4)	0220A6	5.5	9.55	34.0	A	S03
8165.104	IN-EX	C4 I (LC_), 1.6 HDi	9HY (DV6TED4)/9HZ (DV6T	0220A6	5.5	9.55	34.0	A	S03
8127.905	IN-EX	C4 I (LC_), 2.0 16V	RFN (EW10J4)	022124	6.0	12.06	40.8	P	S06
8127.905	IN-EX	C4 I (LC_), 2.0 16V	RFN (EW10J4)	022126	6.0	12.06	40.8	P	S06
8117.601	IN-EX	C4 I 1.6 16V	NFU (TU5JP4)	22095	6.0	11.11	40.0	F	B
8117.601	IN-EX	C4 I 1.6 16V Bio-Flex	NFU (TU5JP4)	22095	6.0	11.11	40.0	F	B
8165.104	IN-EX	C4 II (B7), 1.6 HDi 110	9HR (DV6C)	0220A6	5.5	9.55	34.0	A	S03
8165.104	IN-EX	C4 II (B7), 1.6 HDi 90	9HP (DV6DTED)	0220A6	5.5	9.55	34.0	A	S03
8165.104	IN-EX	C4 Picasso I (UD_), 1.6 HDi	9HY (DV6TED4)/9HZ (DV6T	0220A6	5.5	9.55	34.0	A	S03
8165.104	IN-EX	C4 Picasso I (UD_), 1.6 HDi 110	9HR (DV6C)	0220A6	5.5	9.55	34.0	A	S03
8127.905	IN-EX	C5 I (DC_), 1.8 16V (DC6FZB, DC	6FZ (EW7J4)	022124	6.0	12.06	40.8	P	S06
8127.905	IN-EX	C5 I (DC_), 1.8 16V (DC6FZB, DC	6FZ (EW7J4)	022126	6.0	12.06	40.8	P	S06
8127.905	IN-EX	C5 I (DC_), 2.0 16V (DCRFNC, D	RFN (EW10J4)	022124	6.0	12.06	40.8	P	S06
8127.905	IN-EX	C5 I (DC_), 2.0 16V (DCRFNC, D	RFN (EW10J4)	022126	6.0	12.06	40.8	P	S06
8127.905	IN-EX	C5 I (DC_), 2.0 16V HPi (DCRLZB	RLZ (EW10D)	022124	6.0	12.06	40.8	P	S06
8127.905	IN-EX	C5 I (DC_), 2.0 16V HPi (DCRLZB	RLZ (EW10D)	022126	6.0	12.06	40.8	P	S06
8127.905	IN-EX	C5 I Break (DE_), 1.8 16V (DE6FZ	6FZ (EW7J4)	022124	6.0	12.06	40.8	P	S06
8127.905	IN-EX	C5 I Break (DE_), 1.8 16V (DE6FZ	6FZ (EW7J4)	022126	6.0	12.06	40.8	P	S06
8127.905	IN-EX	C5 I Break (DE_), 2.0 16V (DERF	RFN (EW10J4)	022124	6.0	12.06	40.8	P	S06
8127.905	IN-EX	C5 I Break (DE_), 2.0 16V (DERF	RFN (EW10J4)	022126	6.0	12.06	40.8	P	S06
8127.905	IN-EX	C5 I Break (DE_), 2.0 16V HPi (D	RLZ (EW10D)	022124	6.0	12.06	40.8	P	S06
8127.905	IN-EX	C5 I Break (DE_), 2.0 16V HPi (D	RLZ (EW10D)	022126	6.0	12.06	40.8	P	S06
8165.104	IN-EX	C5 II (RC_), 1.6 HDi (RC8HZB)	9HY (DV6TED4)/9HZ (DV6T	0220A6	5.5	9.55	34.0	A	S03
8127.905	IN-EX	C5 II (RC_), 1.8 16V (RC6FZB)	6FZ (EW7J4)	022124	6.0	12.06	40.8	P	S06
8127.905	IN-EX	C5 II (RC_), 1.8 16V (RC6FZB)	6FZ (EW7J4)	022126	6.0	12.06	40.8	P	S06
8006.105	IN-EX	C5 II 2.2 HDi	4HT (DW12BTED4)	0220A2	6.0	10.06	41.5	A	S06
8006.105	IN-EX	C5 II 2.2 HDi	4HT (DW12BTED4)	0220A2	6.0	10.06	41.5	A	S06
8006.105	IN-EX	C5 II 2.2 HDi	4HT (DW12BTED4)	9640340380	6.0	10.06	41.5	A	S06
8006.105	IN-EX	C5 II 2.2 HDi	4HT (DW12BTED4)	9640340380	6.0	10.06	41.5	A	S06
8165.104	IN-EX	C5 II Break (RE_), 1.6 HDi (RE8H	9HY (DV6TED4)/9HZ (DV6T	0220A6	5.5	9.55	34.0	A	S03
8127.905	IN-EX	C5 II Break (RE_), 1.8 16V (RE6F	6FZ (EW7J4)	022124	6.0	12.06	40.8	P	S06
8127.905	IN-EX	C5 II Break (RE_), 1.8 16V (RE6F	6FZ (EW7J4)	022126	6.0	12.06	40.8	P	S06
8006.105	IN-EX	C5 II Break 2.2 HDi	4HT (DW12BTED4)	0220A2	6.0	10.06	41.5	A	S06
8006.105	IN-EX	C5 II Break 2.2 HDi	4HT (DW12BTED4)	0220A2	6.0	10.06	41.5	A	S06
8006.105	IN-EX	C5 II Break 2.2 HDi	4HT (DW12BTED4)	9640340380	6.0	10.06	41.5	A	S06
8006.105	IN-EX	C5 II Break 2.2 HDi	4HT (DW12BTED4)	9640340380	6.0	10.06	41.5	A	S06
8165.104	IN-EX	C5 III (RD_), 1.6 HDi	9HZ (DV6TED4)	0220A6	5.5	9.55	34.0	A	S03
8165.104	IN-EX	C5 III (RD_), 1.6 HDi 110	9HR (DV6C)/9HL (DV6C)	0220A6	5.5	9.55	34.0	A	S03
8165.104	IN-EX	C5 III (RD_), 1.6 HDi 115	9HR (DV6C)/9HL (DV6C)	0220A6	5.5	9.55	34.0	A	S03
8127.905	IN-EX	C5 III (RD_), 1.8 16V	6FY (EW7A)	022124	6.0	12.06	40.8	P	S06

(D1) Internal diameter, (D2) External diameter, (B) Shape, (C) Material

VALVE GUIDES

CITROEN

IVT Ref.	Type	Model	Engine	OEM Ref.	D1	D2	Length	B	C
8127.905	IN-EX	C5 III (RD_), 1.8 16V	6FY (EW7A)	022126	6.0	12.06	40.8	P	S06
8006.105	IN-EX	C5 III 2.2 HDi	4HT (DW12BTED4)	0220A2	6.0	10.06	41.5	A	S06
8006.105	IN-EX	C5 III 2.2 HDi	4HT (DW12BTED4)	0220A2	6.0	10.06	41.5	A	S06
8006.105	IN-EX	C5 III 2.2 HDi	4HT (DW12BTED4)	9640340380	6.0	10.06	41.5	A	S06
8006.105	IN-EX	C5 III 2.2 HDi	4HT (DW12BTED4)	9640340380	6.0	10.06	41.5	A	S06
8165.104	IN-EX	C5 III Break (TD_), 1.6 HDi	9HZ (DV6TED4)	0220A6	5.5	9.55	34.0	A	S03
8165.104	IN-EX	C5 III Break (TD_), 1.6 HDi 110	9HR (DV6C)/9HL (DV6C)	0220A6	5.5	9.55	34.0	A	S03
8165.104	IN-EX	C5 III Break (TD_), 1.6 HDi 115	9HR (DV6C)/9HL (DV6C)	0220A6	5.5	9.55	34.0	A	S03
8127.905	IN-EX	C5 III Break (TD_), 1.8 16V	6FY (EW7A)	022124	6.0	12.06	40.8	P	S06
8127.905	IN-EX	C5 III Break (TD_), 1.8 16V	6FY (EW7A)	022126	6.0	12.06	40.8	P	S06
8006.105	IN-EX	C5 III Break 2.2 HDi	4HT (DW12BTED4)	0220A2	6.0	10.06	41.5	A	S06
8006.105	IN-EX	C5 III Break 2.2 HDi	4HT (DW12BTED4)	0220A2	6.0	10.06	41.5	A	S06
8006.105	IN-EX	C5 III Break 2.2 HDi	4HT (DW12BTED4)	9640340380	6.0	10.06	41.5	A	S06
8006.105	IN-EX	C5 III Break 2.2 HDi	4HT (DW12BTED4)	9640340380	6.0	10.06	41.5	A	S06
8006.105	IN-EX	C6 2.2 HDi	4HT (DW12BTED4)	0220A2	6.0	10.06	41.5	A	S06
8006.105	IN-EX	C6 2.2 HDi	4HT (DW12BTED4)	0220A2	6.0	10.06	41.5	A	S06
8006.105	IN-EX	C6 2.2 HDi	4HT (DW12BTED4)	9640340380	6.0	10.06	41.5	A	S06
8006.105	IN-EX	C6 2.2 HDi	4HT (DW12BTED4)	9640340380	6.0	10.06	41.5	A	S06
8127.905	IN-EX	C8 (EA_, EB_), 2.0	RFN (EW10J4)	022124	6.0	12.06	40.8	P	S06
8127.905	IN-EX	C8 (EA_, EB_), 2.0	RFN (EW10J4)	022126	6.0	12.06	40.8	P	S06
8127.905	IN-EX	C8 (EA_, EB_), 2.2	3FZ (EW12J4)	022124	6.0	12.06	40.8	P	S06
8127.905	IN-EX	C8 (EA_, EB_), 2.2	3FZ (EW12J4)	022126	6.0	12.06	40.8	P	S06
8006.105	IN-EX	C8 2.2 HDi	4HT (DW12BTED4)	0220A2	6.0	10.06	41.5	A	S06
8006.105	IN-EX	C8 2.2 HDi	4HT (DW12BTED4)	0220A2	6.0	10.06	41.5	A	S06
8006.105	IN-EX	C8 2.2 HDi	4HT (DW12BTED4)	9640340380	6.0	10.06	41.5	A	S06
8006.105	IN-EX	C8 2.2 HDi	4HT (DW12BTED4)	9640340380	6.0	10.06	41.5	A	S06
8165.104	IN-EX	DS3 Cabriolet, 1.6 HDi 90	9HP (DV6DTED)	0220A6	5.5	9.55	34.0	A	S03
8165.104	IN-EX	DS3, 1.4 HDi 70	8HR (DV4C)	0220A6	5.5	9.55	34.0	A	S03
8165.104	IN-EX	DS3, 1.6 HDi 110	9HR (DV6C)	0220A6	5.5	9.55	34.0	A	S03
8165.104	IN-EX	DS3, 1.6 HDi 90	9HP (DV6DTED)	0220A6	5.5	9.55	34.0	A	S03
8165.104	IN-EX	DS4, 1.6 HDi 110	-	0220A6	5.5	9.55	34.0	A	S03
8165.104	IN-EX	DS4, 1.6 HDi 110	9HR (DV6C)	0220A6	5.5	9.55	34.0	A	S03
8193.101	IN	DS4, 1.6 THP 200	5FU (EP6DTX)		5.0	9.05	42.0	A	B
8194.101	EX	DS4, 1.6 THP 200	5FU (EP6DTX)		5.0	9.05	44.5	A	B
8165.104	IN-EX	DS5, 1.6 HDi 110	9HR (DV6C)	0220A6	5.5	9.55	34.0	A	S03
8194.101	EX	DS5, 1.6 THP 200	5FU (EP6DTX)		5.0	9.05	44.5	A	B
8193.101	IN	DS5, 1.6 THP 200	5FU (EP6DTX)		5.0	9.05	42.0	A	B
8134.601	IN-EX	EVASION (22, U6), 1.8	LFZ (XU7JP)	022072	8.0	13.07	45.0	F	B
8134.601	IN-EX	EVASION (22, U6), 1.8	LFZ (XU7JP)	022118	8.0	13.07	45.0	F	B
8178.601	IN-EX	EVASION (22, U6), 1.9 TD	D9B (XUD9A/U)	22075	8.0	14.05	48.0	F	B
8178.601	IN-EX	EVASION (22, U6), 1.9 TD	D9B (XUD9A/U)	22076	8.0	14.05	48.0	F	B
8178.601	IN-EX	EVASION (22, U6), 1.9 TD	DHX (XUD9TF/BTF)/D8B (X	22075	8.0	14.05	48.0	F	B
8178.601	IN-EX	EVASION (22, U6), 1.9 TD	DHX (XUD9TF/BTF)/D8B (X	22076	8.0	14.05	48.0	F	B
8127.905	IN-EX	EVASION (22, U6), 2.0 16V	RFN (EW10J4)	022124	6.0	12.06	40.8	P	S06
8127.905	IN-EX	EVASION (22, U6), 2.0 16V	RFN (EW10J4)	022126	6.0	12.06	40.8	P	S06
8154.601	IN-EX	EVASION (22, U6), 2.0 16V	RFV (XU10J4R)	022119	7.0	12.07	40.0	F	B
8127.905	IN-EX	EVASION (22, U6), 2.0 16V	RFV (XU10J4R)	022124	6.0	12.06	40.8	P	S06
8127.905	IN-EX	EVASION (22, U6), 2.0 16V	RFV (XU10J4R)	022126	6.0	12.06	40.8	P	S06
8134.601	IN-EX	GS Break, A 1.3	G13/625/G13/646	022072	8.0	13.07	45.0	F	B
8134.601	IN-EX	GS Break, A 1.3	G13/625/G13/646	022118	8.0	13.07	45.0	F	B
8095.600	IN-EX	Jumper 2.8 D	8140.63.2800	4749395	8.0	13.03	56.0	F	G1
8095.600	IN-EX	Jumper 2.8 HDi	8140.43N	4749395	8.0	13.03	56.0	F	G1
8095.600	IN-EX	Jumper 2.8 HDi	8140.43S	4749395	8.0	13.03	56.0	F	G1
8095.600	IN-EX	Jumper Autobus 2.8 HDi	8140.43S	4749395	8.0	13.03	56.0	F	G1
8095.600	IN-EX	Jumper Autobus 2.8 HDi 4x4	8140.43S	4749395	8.0	13.03	56.0	F	G1
8178.601	IN-EX	JUMPER Bus (230P), 1.9 D	D8C (XUD9UTF)	22075	8.0	14.05	48.0	F	B
8178.601	IN-EX	JUMPER Bus (230P), 1.9 D	D8C (XUD9UTF)	22076	8.0	14.05	48.0	F	B
8178.601	IN-EX	JUMPER Bus (230P), 1.9 TD	D8C (XUD9UTF)	22075	8.0	14.05	48.0	F	B
8178.601	IN-EX	JUMPER Bus (230P), 1.9 TD	D8C (XUD9UTF)	22075	8.0	14.05	48.0	F	B
8178.601	IN-EX	JUMPER Bus (230P), 1.9 TD	D8C (XUD9UTF)	22076	8.0	14.05	48.0	F	B
8178.601	IN-EX	JUMPER Bus (230P), 1.9 TD	D8C (XUD9UTF)	22076	8.0	14.05	48.0	F	B
8178.601	IN-EX	JUMPER Bus (230P), 1.9 TD 4x4	D9B (XUD9A/U)	22075	8.0	14.05	48.0	F	B

(D1) Internal diameter, (D2) External diameter, (B) Shape, (C) Material

VALVE GUIDES

CITROEN

IVT Ref.	Type	Model	Engine	OEM Ref.	D1	D2	Length	B	C
8178.601	IN-EX	JUMPER Bus (230P), 1.9 TD 4x4	D9B (XUD9A/U)	22076	8.0	14.05	48.0	F	B
8134.601	IN-EX	JUMPER Bus (230P), 2.0	RFW (XU10J2U)	022072	8.0	13.07	45.0	F	B
8134.601	IN-EX	JUMPER Bus (230P), 2.0	RFW (XU10J2U)	022118	8.0	13.07	45.0	F	B
8131.600	IN-EX	JUMPER Bus (230P), 2.0	RFW (XU10J2U)	7701461009	8.0	13.07	45.0	F	G
8134.601	IN-EX	JUMPER Bus (230P), 2.0 4x4	RFW (XU10J2U)	022072	8.0	13.07	45.0	F	B
8134.601	IN-EX	JUMPER Bus (230P), 2.0 4x4	RFW (XU10J2U)	022118	8.0	13.07	45.0	F	B
8131.600	IN-EX	JUMPER Bus (230P), 2.0 4x4	RFW (XU10J2U)	7701461009	8.0	13.07	45.0	F	G
8047.103	IN-EX	JUMPER Bus (230P), 2.8 HDi	8140.43S	94290	6.0	10.03	49.0	A	S01
8047.103	IN-EX	JUMPER Bus (230P), 2.8 HDi 4x4	8140.43S	94290	6.0	10.03	49.0	A	S01
8134.601	IN-EX	JUMPER Bus (244, Z_), 2.0	XU10J2	022072	8.0	13.07	45.0	F	B
8134.601	IN-EX	JUMPER Bus (244, Z_), 2.0	XU10J2	022118	8.0	13.07	45.0	F	B
8047.103	IN-EX	JUMPER Bus (244, Z_), 2.8 HDi	8140.43S	94290	6.0	10.03	49.0	A	S01
8047.103	IN-EX	JUMPER Bus (244, Z_), 2.8 HDi A	8140.43S	94290	6.0	10.03	49.0	A	S01
8174.100	IN-EX	JUMPER Bus, 2.2 HDi 100	4HV (P22DTE)	XS7Q6510AC	7.0	12.06	51.5	A	G1
8047.103	IN-EX	JUMPER Bus, 2.2 HDi 130	4HH (P22DTE)	94290	6.0	10.03	49.0	A	S01
8047.103	IN-EX	JUMPER Bus, 3.0 HDi 155	F1CE0481D (F30DT)	94290	6.0	10.03	49.0	A	S01
8047.103	IN-EX	JUMPER Bus, 3.0 HDi 160	F1CE0481D (F30DT)	94290	6.0	10.03	49.0	A	S01
8047.103	IN-EX	JUMPER Bus, 3.0 HDi 180	F1CE0481D (F30DT)	94290	6.0	10.03	49.0	A	S01
8095.600	IN-EX	Jumper Furgonato 2.8 D	8140.63.2800	4749395	8.0	13.03	56.0	F	G1
8095.600	IN-EX	Jumper Furgonato 2.8 HDi	8140.43N	4749395	8.0	13.03	56.0	F	G1
8095.600	IN-EX	Jumper Furgonato 2.8 HDi	8140.43S	4749395	8.0	13.03	56.0	F	G1
8095.600	IN-EX	Jumper Furgonato 2.8 HDi 4x4	8140.43S	4749395	8.0	13.03	56.0	F	G1
8178.601	IN-EX	JUMPER Kasten (230L), 1.9 D	DHX (XUD9TF/BTF)	22075	8.0	14.05	48.0	F	B
8178.601	IN-EX	JUMPER Kasten (230L), 1.9 D	DHX (XUD9TF/BTF)	22076	8.0	14.05	48.0	F	B
8178.601	IN-EX	JUMPER Kasten (230L), 1.9 TD	D8C (XUD9UTF)	22075	8.0	14.05	48.0	F	B
8178.601	IN-EX	JUMPER Kasten (230L), 1.9 TD	D8C (XUD9UTF)	22076	8.0	14.05	48.0	F	B
8178.601	IN-EX	JUMPER Kasten (230L), 1.9 TD	DHX (XUD9TF/BTF)	22075	8.0	14.05	48.0	F	B
8178.601	IN-EX	JUMPER Kasten (230L), 1.9 TD	DHX (XUD9TF/BTF)	22076	8.0	14.05	48.0	F	B
8134.601	IN-EX	JUMPER Kasten (230L), 2.0	RFW (XU10J2U)	022072	8.0	13.07	45.0	F	B
8134.601	IN-EX	JUMPER Kasten (230L), 2.0	RFW (XU10J2U)	022118	8.0	13.07	45.0	F	B
8131.600	IN-EX	JUMPER Kasten (230L), 2.0	RFW (XU10J2U)	7701461009	8.0	13.07	45.0	F	G
8134.601	IN-EX	JUMPER Kasten (230L), 2.0 4x4	RFW (XU10J2U)	022072	8.0	13.07	45.0	F	B
8134.601	IN-EX	JUMPER Kasten (230L), 2.0 4x4	RFW (XU10J2U)	022118	8.0	13.07	45.0	F	B
8131.600	IN-EX	JUMPER Kasten (230L), 2.0 4x4	RFW (XU10J2U)	7701461009	8.0	13.07	45.0	F	G
8047.103	IN-EX	JUMPER Kasten (230L), 2.8 HDi	8140.43S	94290	6.0	10.03	49.0	A	S01
8047.103	IN-EX	JUMPER Kasten (230L), 2.8 HDi	8140.43S	94290	6.0	10.03	49.0	A	S01
8134.601	IN-EX	JUMPER Kasten (244), 2.0	XU10J2	022072	8.0	13.07	45.0	F	B
8134.601	IN-EX	JUMPER Kasten (244), 2.0	XU10J2	022118	8.0	13.07	45.0	F	B
8047.103	IN-EX	JUMPER Kasten (244), 2.8 HDi	8140.43S	94290	6.0	10.03	49.0	A	S01
8047.103	IN-EX	JUMPER Kasten (244), 2.8 HDi 4x	8140.43S	94290	6.0	10.03	49.0	A	S01
8174.100	IN-EX	JUMPER Kasten, 2.2 HDi 100	4HV (P22DTE)	XS7Q6510AC	7.0	12.06	51.5	A	G1
8047.103	IN-EX	JUMPER Kasten, 2.2 HDi 130	4HH (P22DTE)	94290	6.0	10.03	49.0	A	S01
8047.103	IN-EX	JUMPER Kasten, 3.0 HDi 145	F1CE3481N	94290	6.0	10.03	49.0	A	S01
8047.103	IN-EX	JUMPER Kasten, 3.0 HDi 155	F1CE0481D (F30DT)	94290	6.0	10.03	49.0	A	S01
8047.103	IN-EX	JUMPER Kasten, 3.0 HDi 160	F1CE0481D (F30DT)	94290	6.0	10.03	49.0	A	S01
8047.103	IN-EX	JUMPER Kasten, 3.0 HDi 180	F1CE0481D (F30DT)	94290	6.0	10.03	49.0	A	S01
8178.601	IN-EX	JUMPER Pritsche/Fahrgestell (23	D8C (XUD9UTF)	22075	8.0	14.05	48.0	F	B
8178.601	IN-EX	JUMPER Pritsche/Fahrgestell (23	D8C (XUD9UTF)	22076	8.0	14.05	48.0	F	B
8178.601	IN-EX	JUMPER Pritsche/Fahrgestell (23	D9B	22075	8.0	14.05	48.0	F	B
8178.601	IN-EX	JUMPER Pritsche/Fahrgestell (23	D9B	22076	8.0	14.05	48.0	F	B
8134.601	IN-EX	JUMPER Pritsche/Fahrgestell (23	RFW (XU10J2U)	022072	8.0	13.07	45.0	F	B
8134.601	IN-EX	JUMPER Pritsche/Fahrgestell (23	RFW (XU10J2U)	022118	8.0	13.07	45.0	F	B
8131.600	IN-EX	JUMPER Pritsche/Fahrgestell (23	RFW (XU10J2U)	7701461009	8.0	13.07	45.0	F	G
8047.103	IN-EX	JUMPER Pritsche/Fahrgestell (23	8140.43S	94290	6.0	10.03	49.0	A	S01
8047.103	IN-EX	JUMPER Pritsche/Fahrgestell (24	8140.43S	94290	6.0	10.03	49.0	A	S01
8047.103	IN-EX	JUMPER Pritsche/Fahrgestell (24	F28TDCR	94290	6.0	10.03	49.0	A	S01
8174.100	IN-EX	JUMPER Pritsche/Fahrgestell, 2.2	4HV (P22DTE)	XS7Q6510AC	7.0	12.06	51.5	A	G1
8047.103	IN-EX	JUMPER Pritsche/Fahrgestell, 2.2	4HH (P22DTE)	94290	6.0	10.03	49.0	A	S01
8047.103	IN-EX	JUMPER Pritsche/Fahrgestell, 3.0	F1CE3481N	94290	6.0	10.03	49.0	A	S01
8047.103	IN-EX	JUMPER Pritsche/Fahrgestell, 3.0	F1CE0481D (F30DT)	94290	6.0	10.03	49.0	A	S01
8047.103	IN-EX	JUMPER Pritsche/Fahrgestell, 3.0	F1CE0481D (F30DT)	94290	6.0	10.03	49.0	A	S01
8178.601	IN-EX	JUMPY (U6U), 1.9 D	DHX (XUD9TF/BTF)	22075	8.0	14.05	48.0	F	B

(D1) Internal diameter, (D2) External diameter, (B) Shape, (C) Material

VALVE GUIDES

CITROEN

IVT Ref.	Type	Model	Engine	OEM Ref.	D1	D2	Length	B	C
8178.601	IN-EX	JUMPY (U6U), 1.9 D	DHX (XUD9TF/BTF)	22076	8.0	14.05	48.0	F	B
8178.601	IN-EX	JUMPY (U6U), 1.9 TD	D8B (XUD9TF)	22075	8.0	14.05	48.0	F	B
8178.601	IN-EX	JUMPY (U6U), 1.9 TD	D8B (XUD9TF)	22076	8.0	14.05	48.0	F	B
8178.601	IN-EX	JUMPY (U6U), 1.9 TD	DHX (XUD9TF/BTF)	22075	8.0	14.05	48.0	F	B
8178.601	IN-EX	JUMPY (U6U), 1.9 TD	DHX (XUD9TF/BTF)	22076	8.0	14.05	48.0	F	B
8127.905	IN-EX	JUMPY (U6U), 2.0	RFN (EW10J4)	022124	6.0	12.06	40.8	P	S06
8127.905	IN-EX	JUMPY (U6U), 2.0	RFN (EW10J4)	022126	6.0	12.06	40.8	P	S06
8178.601	IN-EX	JUMPY Kasten (BS_, BT_, BY_,	D8B (XUD9TF)	22075	8.0	14.05	48.0	F	B
8178.601	IN-EX	JUMPY Kasten (BS_, BT_, BY_,	D8B (XUD9TF)	22076	8.0	14.05	48.0	F	B
8178.601	IN-EX	JUMPY Pritsche/Fahrgestell (BU_	DJZ (XUD9Y)	22075	8.0	14.05	48.0	F	B
8178.601	IN-EX	JUMPY Pritsche/Fahrgestell (BU_	DJZ (XUD9Y)	22076	8.0	14.05	48.0	F	B
8127.905	IN-EX	JUMPY Pritsche/Fahrgestell (BU_	RFN (EW10J4)	022124	6.0	12.06	40.8	P	S06
8127.905	IN-EX	JUMPY Pritsche/Fahrgestell (BU_	RFN (EW10J4)	022126	6.0	12.06	40.8	P	S06
8159.601	IN-EX	NEMO Kasten (AA_), 1.4	KFV (TU3A)	9456069680	7.0	13.06	47.6	F	B
8165.104	IN-EX	NEMO Kasten (AA_), 1.4 HDi	8HS (DV4TED)	0220A6	5.5	9.55	34.0	A	S03
8159.601	IN-EX	NEMO Kombi, 1.4	KFT (TU3A)/KFV (TU3A)	9456069680	7.0	13.06	47.6	F	B
8165.104	IN-EX	NEMO Kombi, 1.4 HDi	8HS (DV4TED)	0220A6	5.5	9.55	34.0	A	S03
8159.601	IN-EX	SAXO (S0, S1), 1.0 X	CDZ (TU9M)	9456069680	7.0	13.06	47.6	F	B
8159.601	IN-EX	SAXO (S0, S1), 1.0 X	CDZ (TU9M)	9456069680	7.0	13.06	47.6	F	B
8159.601	IN-EX	SAXO (S0, S1), 1.1 X,SX	HDZ (TU1M)	9456069680	7.0	13.06	47.6	F	B
8159.601	IN-EX	SAXO (S0, S1), 1.1 X,SX	HDZ (TU1M)/HFX (TU1JP)	9456069680	7.0	13.06	47.6	F	B
8159.601	IN-EX	SAXO (S0, S1), 1.4 VTS	KFX (TU3JP)/KFW (TU3JP)	9456069680	7.0	13.06	47.6	F	B
8159.601	IN-EX	SAXO (S0, S1), 1.6	NFT (TU5JP)	9456069680	7.0	13.06	47.6	F	B
8143.601	IN-EX	SAXO (S0, S1), 1.6	NFZ (TU5JP)	022084	7.0	13.07	48.5	F	B
8143.601	IN-EX	SAXO (S0, S1), 1.6 VTL,VTR	NFZ (TU5JP)	022084	7.0	13.07	48.5	F	B
8159.601	IN-EX	SAXO (S0, S1), 1.6 VTS	NFT (TU5JP)	9456069680	7.0	13.06	47.6	F	B
8111.600	IN-EX	Saxo 1.1SX	HDZ (TU1M)	22059	7.0	13.06	47.5	F	G
8111.600	IN-EX	Saxo 1.1X	HDZ (TU1M)	22059	7.0	13.06	47.5	F	G
8111.600	IN-EX	Saxo 1.4 VTS	KFX (TU3JP)	22059	7.0	13.06	47.5	F	G
8159.601	IN-EX	VISA, 1.0	XV8	9456069680	7.0	13.06	47.6	F	B
8134.601	IN-EX	VISA, 16 GTI	180A (XU5J)	022072	8.0	13.07	45.0	F	B
8134.601	IN-EX	VISA, 16 GTI	180A (XU5J)	022118	8.0	13.07	45.0	F	B
8131.600	IN-EX	VISA, 16 GTI	180A (XU5J)	7701461009	8.0	13.07	45.0	F	G
8134.601	IN-EX	VISA, 16 GTI	B6D	022072	8.0	13.07	45.0	F	B
8134.601	IN-EX	VISA, 16 GTI	B6D	022118	8.0	13.07	45.0	F	B
8131.600	IN-EX	XANTIA (X1), 1.6 i	BFZ (XU5JP)	7701461009	8.0	13.07	45.0	F	G
8134.601	IN-EX	XANTIA (X1), 1.8 i	LFX (XU7JB)	022072	8.0	13.07	45.0	F	B
8134.601	IN-EX	XANTIA (X1), 1.8 i	LFX (XU7JB)	022118	8.0	13.07	45.0	F	B
8134.601	IN-EX	XANTIA (X1), 1.8 i	LFZ (XU7JP)	022072	8.0	13.07	45.0	F	B
8134.601	IN-EX	XANTIA (X1), 1.8 i	LFZ (XU7JP)	022118	8.0	13.07	45.0	F	B
8154.601	IN-EX	XANTIA (X1), 1.8 i 16V	LFY (XU7JP4)	022119	7.0	12.07	40.0	F	B
8127.905	IN-EX	XANTIA (X1), 1.8 i 16V	LFY (XU7JP4)	022124	6.0	12.06	40.8	P	S06
8127.905	IN-EX	XANTIA (X1), 1.8 i 16V	LFY (XU7JP4)	022126	6.0	12.06	40.8	P	S06
8178.601	IN-EX	XANTIA (X1), 1.9 D	D9B (XUD9A/L)	22075	8.0	14.05	48.0	F	B
8178.601	IN-EX	XANTIA (X1), 1.9 D	D9B (XUD9A/L)	22076	8.0	14.05	48.0	F	B
8178.601	IN-EX	XANTIA (X1), 1.9 D	DHW (XUD9SD)	22075	8.0	14.05	48.0	F	B
8178.601	IN-EX	XANTIA (X1), 1.9 D	DHW (XUD9SD)	22076	8.0	14.05	48.0	F	B
8178.601	IN-EX	XANTIA (X1), 1.9 SD	DHX (XUD9TF/BTF)/DHY (X	22075	8.0	14.05	48.0	F	B
8178.601	IN-EX	XANTIA (X1), 1.9 SD	DHX (XUD9TF/BTF)/DHY (X	22076	8.0	14.05	48.0	F	B
8178.601	IN-EX	XANTIA (X1), 1.9 Turbo D	DHW (XUD9SD)	22075	8.0	14.05	48.0	F	B
8178.601	IN-EX	XANTIA (X1), 1.9 Turbo D	DHW (XUD9SD)	22076	8.0	14.05	48.0	F	B
8154.601	IN-EX	XANTIA (X1), 2.0 i 16V	RFT (XU10J4/Z)	022119	7.0	12.07	40.0	F	B
8154.601	IN-EX	XANTIA (X1), 2.0 i 16V	RFV (XU10J4R)	022119	7.0	12.07	40.0	F	B
8127.905	IN-EX	XANTIA (X1), 2.0 i 16V	RFV (XU10J4R)	022124	6.0	12.06	40.8	P	S06
8127.905	IN-EX	XANTIA (X1), 2.0 i 16V	RFV (XU10J4R)	022126	6.0	12.06	40.8	P	S06
8154.601	IN-EX	XANTIA (X1), 2.0 i 16V	RFY (XU10J4/Z)	022119	7.0	12.07	40.0	F	B
8134.601	IN-EX	XANTIA (X2), 1.8 i	LFX (XU7JB)	022072	8.0	13.07	45.0	F	B
8134.601	IN-EX	XANTIA (X2), 1.8 i	LFX (XU7JB)	022118	8.0	13.07	45.0	F	B
8154.601	IN-EX	XANTIA (X2), 1.8 i 16V	LFY (XU7JP4)	022119	7.0	12.07	40.0	F	B
8127.905	IN-EX	XANTIA (X2), 1.8 i 16V	LFY (XU7JP4)	022124	6.0	12.06	40.8	P	S06
8127.905	IN-EX	XANTIA (X2), 1.8 i 16V	LFY (XU7JP4)	022126	6.0	12.06	40.8	P	S06
8178.601	IN-EX	XANTIA (X2), 1.9 SD	DHX (XUD9TF/BTF)/DHY (X	22075	8.0	14.05	48.0	F	B

(D1) Internal diameter, (D2) External diameter, (B) Shape, (C) Material

VALVE GUIDES

CITROEN

IVT Ref.	Type	Model	Engine	OEM Ref.	D1	D2	Length	B	C
8178.601	IN-EX	XANTIA (X2), 1.9 SD	DHX (XUD9TF/BTF)/DHY (X	22076	8.0	14.05	48.0	F	B
8178.601	IN-EX	XANTIA (X2), 1.9 Turbo D	DHW (XUD9SD)	22075	8.0	14.05	48.0	F	B
8178.601	IN-EX	XANTIA (X2), 1.9 Turbo D	DHW (XUD9SD)	22076	8.0	14.05	48.0	F	B
8154.601	IN-EX	XANTIA (X2), 2.0 i 16V	RFV (XU10J4R)	022119	7.0	12.07	40.0	F	B
8127.905	IN-EX	XANTIA (X2), 2.0 i 16V	RFV (XU10J4R)	022124	6.0	12.06	40.8	P	S06
8127.905	IN-EX	XANTIA (X2), 2.0 i 16V	RFV (XU10J4R)	022126	6.0	12.06	40.8	P	S06
8134.601	IN-EX	XANTIA Break (X1), 1.8 i	LFZ (XU7JP)	022072	8.0	13.07	45.0	F	B
8134.601	IN-EX	XANTIA Break (X1), 1.8 i	LFZ (XU7JP)	022118	8.0	13.07	45.0	F	B
8154.601	IN-EX	XANTIA Break (X1), 1.8 i 16V	LFY (XU7JP4)	022119	7.0	12.07	40.0	F	B
8127.905	IN-EX	XANTIA Break (X1), 1.8 i 16V	LFY (XU7JP4)	022124	6.0	12.06	40.8	P	S06
8127.905	IN-EX	XANTIA Break (X1), 1.8 i 16V	LFY (XU7JP4)	022126	6.0	12.06	40.8	P	S06
8178.601	IN-EX	XANTIA Break (X1), 1.9 SD	DHX (XUD9TF/BTF)/DHY (X	22075	8.0	14.05	48.0	F	B
8178.601	IN-EX	XANTIA Break (X1), 1.9 SD	DHX (XUD9TF/BTF)/DHY (X	22076	8.0	14.05	48.0	F	B
8178.601	IN-EX	XANTIA Break (X1), 1.9 Turbo D	DHW (XUD9SD)	22075	8.0	14.05	48.0	F	B
8178.601	IN-EX	XANTIA Break (X1), 1.9 Turbo D	DHW (XUD9SD)	22076	8.0	14.05	48.0	F	B
8154.601	IN-EX	XANTIA Break (X1), 2.0 i 16V	RFV (XU10J4R)	022119	7.0	12.07	40.0	F	B
8127.905	IN-EX	XANTIA Break (X1), 2.0 i 16V	RFV (XU10J4R)	022124	6.0	12.06	40.8	P	S06
8127.905	IN-EX	XANTIA Break (X1), 2.0 i 16V	RFV (XU10J4R)	022126	6.0	12.06	40.8	P	S06
8134.601	IN-EX	XANTIA Break (X2), 1.8 i	LFX (XU7JB)	022072	8.0	13.07	45.0	F	B
8134.601	IN-EX	XANTIA Break (X2), 1.8 i	LFX (XU7JB)	022118	8.0	13.07	45.0	F	B
8154.601	IN-EX	XANTIA Break (X2), 1.8 i 16V	LFY (XU7JP4)	022119	7.0	12.07	40.0	F	B
8127.905	IN-EX	XANTIA Break (X2), 1.8 i 16V	LFY (XU7JP4)	022124	6.0	12.06	40.8	P	S06
8127.905	IN-EX	XANTIA Break (X2), 1.8 i 16V	LFY (XU7JP4)	022126	6.0	12.06	40.8	P	S06
8178.601	IN-EX	XANTIA Break (X2), 1.9 SD	DHX (XUD9TF/BTF)/D8B (X	22075	8.0	14.05	48.0	F	B
8178.601	IN-EX	XANTIA Break (X2), 1.9 SD	DHX (XUD9TF/BTF)/D8B (X	22076	8.0	14.05	48.0	F	B
8178.601	IN-EX	XANTIA Break (X2), 1.9 Turbo D	DHV (XUD9BSD)	22075	8.0	14.05	48.0	F	B
8178.601	IN-EX	XANTIA Break (X2), 1.9 Turbo D	DHV (XUD9BSD)	22076	8.0	14.05	48.0	F	B
8154.601	IN-EX	XANTIA Break (X2), 2.0 i 16V	RFV (XU10J4R)	022119	7.0	12.07	40.0	F	B
8127.905	IN-EX	XANTIA Break (X2), 2.0 i 16V	RFV (XU10J4R)	022124	6.0	12.06	40.8	P	S06
8127.905	IN-EX	XANTIA Break (X2), 2.0 i 16V	RFV (XU10J4R)	022126	6.0	12.06	40.8	P	S06
8154.601	IN-EX	XM (Y4), 2.0 i 16V	RFV (XU10J4R)	022119	7.0	12.07	40.0	F	B
8127.905	IN-EX	XM (Y4), 2.0 i 16V	RFV (XU10J4R)	022124	6.0	12.06	40.8	P	S06
8127.905	IN-EX	XM (Y4), 2.0 i 16V	RFV (XU10J4R)	022126	6.0	12.06	40.8	P	S06
8134.601	IN-EX	XM Break (Y3), 3.0 V6	UFZ (ZPJ/Z)/SFZ (ZPJ/Z)	022072	8.0	13.07	45.0	F	B
8134.601	IN-EX	XM Break (Y3), 3.0 V6	UFZ (ZPJ/Z)/SFZ (ZPJ/Z)	022118	8.0	13.07	45.0	F	B
8154.601	IN-EX	XM Break (Y4), 2.0 i 16V	RFV (XU10J4R)	022119	7.0	12.07	40.0	F	B
8127.905	IN-EX	XM Break (Y4), 2.0 i 16V	RFV (XU10J4R)	022124	6.0	12.06	40.8	P	S06
8127.905	IN-EX	XM Break (Y4), 2.0 i 16V	RFV (XU10J4R)	022126	6.0	12.06	40.8	P	S06
8165.104	IN-EX	XSARA (N1), 1.4 HDi	8HX (DV4TD)	0220A6	5.5	9.55	34.0	A	S03
8159.601	IN-EX	XSARA (N1), 1.4 i	KFX (TU3JP)/KFW (TU3JP)	9456069680	7.0	13.06	47.6	F	B
8143.601	IN-EX	XSARA (N1), 1.6 i	NFZ (TU5JP)	022084	7.0	13.07	48.5	F	B
8134.601	IN-EX	XSARA (N1), 1.8 i	LFX (XU7JB)	022072	8.0	13.07	45.0	F	B
8134.601	IN-EX	XSARA (N1), 1.8 i	LFX (XU7JB)	022118	8.0	13.07	45.0	F	B
8154.601	IN-EX	XSARA (N1), 1.8 i 16V	LFY (XU7JP4)	022119	7.0	12.07	40.0	F	B
8127.905	IN-EX	XSARA (N1), 1.8 i 16V	LFY (XU7JP4)	022124	6.0	12.06	40.8	P	S06
8127.905	IN-EX	XSARA (N1), 1.8 i 16V	LFY (XU7JP4)	022126	6.0	12.06	40.8	P	S06
8134.601	IN-EX	XSARA (N1), 1.8 i Aut.	LFZ (XU7JP)	022072	8.0	13.07	45.0	F	B
8134.601	IN-EX	XSARA (N1), 1.8 i Aut.	LFZ (XU7JP)	022118	8.0	13.07	45.0	F	B
8178.601	IN-EX	XSARA (N1), 1.9 SD	DHY (XUD9TE/Y)	22075	8.0	14.05	48.0	F	B
8178.601	IN-EX	XSARA (N1), 1.9 SD	DHY (XUD9TE/Y)	22076	8.0	14.05	48.0	F	B
8178.601	IN-EX	XSARA (N1), 1.9 TD	DJY (XUD9A)	22075	8.0	14.05	48.0	F	B
8178.601	IN-EX	XSARA (N1), 1.9 TD	DJY (XUD9A)	22076	8.0	14.05	48.0	F	B
8127.905	IN-EX	XSARA (N1), 2.0 16V	RFN (EW10J4)	022124	6.0	12.06	40.8	P	S06
8127.905	IN-EX	XSARA (N1), 2.0 16V	RFN (EW10J4)	022126	6.0	12.06	40.8	P	S06
8147.601	IN-EX	XSARA (N1), 2.0 16V	RFS (XU10J4RS)	022096	6.0	12.06	40.8	F	B
8154.601	IN-EX	XSARA (N1), 2.0 16V	RFV (XU10J4R)	022119	7.0	12.07	40.0	F	B
8127.905	IN-EX	XSARA (N1), 2.0 16V	RFV (XU10J4R)	022124	6.0	12.06	40.8	P	S06
8127.905	IN-EX	XSARA (N1), 2.0 16V	RFV (XU10J4R)	022126	6.0	12.06	40.8	P	S06
8111.600	IN-EX	Xsara 1.4i	KFX (TU3JP)	22059	7.0	13.06	47.5	F	G
8117.601	IN-EX	Xsara 1.6 16V	NFU (TU5JP4)	22095	6.0	11.11	40.0	F	B
8165.104	IN-EX	XSARA Break (N2), 1.4 HDi	8HX (DV4TD)	0220A6	5.5	9.55	34.0	A	S03
8159.601	IN-EX	XSARA Break (N2), 1.4 i	KFX (TU3JP)/KFW (TU3JP)	9456069680	7.0	13.06	47.6	F	B

(D1) Internal diameter, (D2) External diameter, (B) Shape, (C) Material

VALVE GUIDES

CITROEN

IVT Ref.	Type	Model	Engine	OEM Ref.	D1	D2	Length	B	C
8143.601	IN-EX	XSARA Break (N2), 1.6 i	NFZ (TU5JP)	022084	7.0	13.07	48.5	F	B
8134.601	IN-EX	XSARA Break (N2), 1.8 i	LFX (XU7JB)	022072	8.0	13.07	45.0	F	B
8134.601	IN-EX	XSARA Break (N2), 1.8 i	LFX (XU7JB)	022118	8.0	13.07	45.0	F	B
8154.601	IN-EX	XSARA Break (N2), 1.8 i 16V	LFY (XU7JP4)	022119	7.0	12.07	40.0	F	B
8127.905	IN-EX	XSARA Break (N2), 1.8 i 16V	LFY (XU7JP4)	022124	6.0	12.06	40.8	P	S06
8127.905	IN-EX	XSARA Break (N2), 1.8 i 16V	LFY (XU7JP4)	022126	6.0	12.06	40.8	P	S06
8134.601	IN-EX	XSARA Break (N2), 1.8 i Aut.	LFZ (XU7JP)	022072	8.0	13.07	45.0	F	B
8134.601	IN-EX	XSARA Break (N2), 1.8 i Aut.	LFZ (XU7JP)	022118	8.0	13.07	45.0	F	B
8178.601	IN-EX	XSARA Break (N2), 1.9 D	DHV (XUD9BSD)	22075	8.0	14.05	48.0	F	B
8178.601	IN-EX	XSARA Break (N2), 1.9 D	DHV (XUD9BSD)	22076	8.0	14.05	48.0	F	B
8178.601	IN-EX	XSARA Break (N2), 1.9 D	DHY (XUD9TE/Y)	22075	8.0	14.05	48.0	F	B
8178.601	IN-EX	XSARA Break (N2), 1.9 D	DHY (XUD9TE/Y)	22076	8.0	14.05	48.0	F	B
8178.601	IN-EX	XSARA Break (N2), 1.9 TD	DHY (XUD9TE/Y)	22075	8.0	14.05	48.0	F	B
8178.601	IN-EX	XSARA Break (N2), 1.9 TD	DHY (XUD9TE/Y)	22076	8.0	14.05	48.0	F	B
8127.905	IN-EX	XSARA Break (N2), 2.0 16V	RFN (EW10J4)	022124	6.0	12.06	40.8	P	S06
8127.905	IN-EX	XSARA Break (N2), 2.0 16V	RFN (EW10J4)	022126	6.0	12.06	40.8	P	S06
8154.601	IN-EX	XSARA Break (N2), 2.0 16V	RFV (XU10J4R)	022119	7.0	12.07	40.0	F	B
8127.905	IN-EX	XSARA Break (N2), 2.0 16V	RFV (XU10J4R)	022124	6.0	12.06	40.8	P	S06
8127.905	IN-EX	XSARA Break (N2), 2.0 16V	RFV (XU10J4R)	022126	6.0	12.06	40.8	P	S06
8111.600	IN-EX	Xsara Break 1.4i	KFX (TU3JP)	22059	7.0	13.06	47.5	F	G
8117.601	IN-EX	Xsara Break 1.6 16V	NFU (TU5JP4)	22095	6.0	11.11	40.0	F	B
8165.104	IN-EX	XSARA Coupe (N0), 1.4 HDi	8HX (DV4TD)	0220A6	5.5	9.55	34.0	A	S03
8159.601	IN-EX	XSARA Coupe (N0), 1.4 i	KFX (TU3JP)/KFW (TU3JP)	9456069680	7.0	13.06	47.6	F	B
8143.601	IN-EX	XSARA Coupe (N0), 1.6 i	NFZ (TU5JP)	022084	7.0	13.07	48.5	F	B
8134.601	IN-EX	XSARA Coupe (N0), 1.8 i	LFX (XU7JB)	022072	8.0	13.07	45.0	F	B
8134.601	IN-EX	XSARA Coupe (N0), 1.8 i	LFX (XU7JB)	022118	8.0	13.07	45.0	F	B
8134.601	IN-EX	XSARA Coupe (N0), 1.8 i	LFZ (XU7JP)	022072	8.0	13.07	45.0	F	B
8134.601	IN-EX	XSARA Coupe (N0), 1.8 i	LFZ (XU7JP)	022118	8.0	13.07	45.0	F	B
8154.601	IN-EX	XSARA Coupe (N0), 1.8 i 16V	LFY (XU7JP4)	022119	7.0	12.07	40.0	F	B
8127.905	IN-EX	XSARA Coupe (N0), 1.8 i 16V	LFY (XU7JP4)	022124	6.0	12.06	40.8	P	S06
8127.905	IN-EX	XSARA Coupe (N0), 1.8 i 16V	LFY (XU7JP4)	022126	6.0	12.06	40.8	P	S06
8178.601	IN-EX	XSARA Coupe (N0), 1.9 TD	D9B (XUD9A/U)/DJY (XUD9	22075	8.0	14.05	48.0	F	B
8178.601	IN-EX	XSARA Coupe (N0), 1.9 TD	D9B (XUD9A/U)/DJY (XUD9	22076	8.0	14.05	48.0	F	B
8127.905	IN-EX	XSARA Coupe (N0), 2.0 16V	RFN (EW10J4)	022124	6.0	12.06	40.8	P	S06
8127.905	IN-EX	XSARA Coupe (N0), 2.0 16V	RFN (EW10J4)	022126	6.0	12.06	40.8	P	S06
8147.601	IN-EX	XSARA Coupe (N0), 2.0 i 16V	RFS (XU10J4RS)	022096	6.0	12.06	40.8	F	B
8111.600	IN-EX	Xsara Coupé 1.4i	KFX (TU3JP)	22059	7.0	13.06	47.5	F	G
8117.601	IN-EX	Xsara Coupé 1.6 16V	NFU (TU5JP4)	22095	6.0	11.11	40.0	F	B
8143.601	IN-EX	XSARA PICASSO (N68), 1.6	NFV (TU5JP)	022084	7.0	13.07	48.5	F	B
8143.601	IN-EX	XSARA PICASSO (N68), 1.6	NFZ (TU5JP)	022084	7.0	13.07	48.5	F	B
8165.104	IN-EX	XSARA PICASSO (N68), 1.6 HDi	9HX (DV6ATED4)	0220A6	5.5	9.55	34.0	A	S03
8165.104	IN-EX	XSARA PICASSO (N68), 1.6 HDi	9HY (DV6TED4)/9HZ (DV6T	0220A6	5.5	9.55	34.0	A	S03
8127.905	IN-EX	XSARA PICASSO (N68), 1.8 16V	6FZ (EW7J4)	022124	6.0	12.06	40.8	P	S06
8127.905	IN-EX	XSARA PICASSO (N68), 1.8 16V	6FZ (EW7J4)	022126	6.0	12.06	40.8	P	S06
8127.905	IN-EX	XSARA PICASSO (N68), 2.0 16V	RFN (EW10J4)	022124	6.0	12.06	40.8	P	S06
8127.905	IN-EX	XSARA PICASSO (N68), 2.0 16V	RFN (EW10J4)	022126	6.0	12.06	40.8	P	S06
8117.601	IN-EX	Xsara Picasso 1.6 16V	NFU (TU5JP4)	22095	6.0	11.11	40.0	F	B
8159.601	IN-EX	ZX (N2), 1,1	H1A/H1B	9456069680	7.0	13.06	47.6	F	B
8159.601	IN-EX	ZX (N2), 1.1	HDZ (TU1M)	9456069680	7.0	13.06	47.6	F	B
8159.601	IN-EX	ZX (N2), 1.4	KDZ (TU3M/Z)	9456069680	7.0	13.06	47.6	F	B
8159.601	IN-EX	ZX (N2), 1.4 i	KDZ (TU3M/Z)/KFX (TU3JP)/	9456069680	7.0	13.06	47.6	F	B
8134.601	IN-EX	ZX (N2), 1.6	BFZ (XU5JP)/BDY (XU5M)	022072	8.0	13.07	45.0	F	B
8134.601	IN-EX	ZX (N2), 1.6	BFZ (XU5JP)/BDY (XU5M)	022118	8.0	13.07	45.0	F	B
8134.601	IN-EX	ZX (N2), 1.6 i	BFZ (XU5JP)/BDY (XU5M)	022072	8.0	13.07	45.0	F	B
8134.601	IN-EX	ZX (N2), 1.6 i	BFZ (XU5JP)/BDY (XU5M)	022118	8.0	13.07	45.0	F	B
8134.601	IN-EX	ZX (N2), 1.8 i	LFZ (XU7JP)	022072	8.0	13.07	45.0	F	B
8134.601	IN-EX	ZX (N2), 1.8 i	LFZ (XU7JP)	022118	8.0	13.07	45.0	F	B
8154.601	IN-EX	ZX (N2), 1.8 i 16V	LFY (XU7JP4)	022119	7.0	12.07	40.0	F	B
8127.905	IN-EX	ZX (N2), 1.8 i 16V	LFY (XU7JP4)	022124	6.0	12.06	40.8	P	S06
8127.905	IN-EX	ZX (N2), 1.8 i 16V	LFY (XU7JP4)	022126	6.0	12.06	40.8	P	S06
8178.601	IN-EX	ZX (N2), 1.9 D	DHY (XUD9TE/Y)	22075	8.0	14.05	48.0	F	B
8178.601	IN-EX	ZX (N2), 1.9 D	DHY (XUD9TE/Y)	22076	8.0	14.05	48.0	F	B

(D1) Internal diameter, (D2) External diameter, (B) Shape, (C) Material

VALVE GUIDES

IVT Ref.	Type	Model	Engine	OEM Ref.	D1	D2	Length	B	C
CITROEN									
8178.601	IN-EX	ZX (N2), 1.9 DT	DJZ (XUD9Y)	22075	8.0	14.05	48.0	F	B
8178.601	IN-EX	ZX (N2), 1.9 DT	DJZ (XUD9Y)	22076	8.0	14.05	48.0	F	B
8134.601	IN-EX	ZX (N2), 1.9 i	DKZ (XU9JA)	022072	8.0	13.07	45.0	F	B
8134.601	IN-EX	ZX (N2), 1.9 i	DKZ (XU9JA)	022118	8.0	13.07	45.0	F	B
8131.600	IN-EX	ZX (N2), 1.9 i	DKZ (XU9JA)	7701461009	8.0	13.07	45.0	F	G
8178.601	IN-EX	ZX (N2), 1.9 TD	-	22075	8.0	14.05	48.0	F	B
8178.601	IN-EX	ZX (N2), 1.9 TD	-	22076	8.0	14.05	48.0	F	B
8154.601	IN-EX	ZX (N2), 2.0 i 16V	RFT (XU10J4/Z)	022119	7.0	12.07	40.0	F	B
8154.601	IN-EX	ZX (N2), 2.0 i 16V	RFT (XU10J4/Z)/RFY (XU10	022119	7.0	12.07	40.0	F	B
8111.600	IN-EX	ZX 1.1	HDZ (TU1M)	22059	7.0	13.06	47.5	F	G
8111.600	IN-EX	ZX 1.1	K1A	22059	7.0	13.06	47.5	F	G
8111.600	IN-EX	ZX 1.1	K1B	22059	7.0	13.06	47.5	F	G
8111.600	IN-EX	ZX 1.4i	KDX (TU3M/Z)	22059	7.0	13.06	47.5	F	G
8111.600	IN-EX	ZX 1.4i	KDZ (TU3M/Z)	22059	7.0	13.06	47.5	F	G
8111.600	IN-EX	ZX 1.4i	KFX (TU3JP)	22059	7.0	13.06	47.5	F	G
8159.601	IN-EX	ZX Break (N2), 1.4 i	KFX (TU3JP)/KDX (TU3M/Z)/	9456069680	7.0	13.06	47.6	F	B
8134.601	IN-EX	ZX Break (N2), 1.6 i	BFZ (XU5JP)/BDY (XU5M)	022072	8.0	13.07	45.0	F	B
8134.601	IN-EX	ZX Break (N2), 1.6 i	BFZ (XU5JP)/BDY (XU5M)	022118	8.0	13.07	45.0	F	B
8131.600	IN-EX	ZX Break (N2), 1.6 i	BFZ (XU5JP)/BDY (XU5M)	7701461009	8.0	13.07	45.0	F	G
8154.601	IN-EX	ZX Break (N2), 1.8 i 16V	LFY (XU7JP4)	022119	7.0	12.07	40.0	F	B
8127.905	IN-EX	ZX Break (N2), 1.8 i 16V	LFY (XU7JP4)	022124	6.0	12.06	40.8	P	S06
8127.905	IN-EX	ZX Break (N2), 1.8 i 16V	LFY (XU7JP4)	022126	6.0	12.06	40.8	P	S06
8178.601	IN-EX	ZX Break (N2), 1.9 D	DHY (XUD9TE/Y)	22075	8.0	14.05	48.0	F	B
8178.601	IN-EX	ZX Break (N2), 1.9 D	DHY (XUD9TE/Y)	22076	8.0	14.05	48.0	F	B
8178.601	IN-EX	ZX Break (N2), 1.9 TD	D9B (XUD9A/U)	22075	8.0	14.05	48.0	F	B
8178.601	IN-EX	ZX Break (N2), 1.9 TD	D9B (XUD9A/U)	22076	8.0	14.05	48.0	F	B
8111.600	IN-EX	ZX Break 1.4i	KDX (TU3M/Z)	22059	7.0	13.06	47.5	F	G
8111.600	IN-EX	ZX Break 1.4i	KDY (TU3M)	22059	7.0	13.06	47.5	F	G
8111.600	IN-EX	ZX Break 1.4i	KFX (TU3JP)	22059	7.0	13.06	47.5	F	G
DACIA									
8035.601	IN-EX	DUSTER, 1.5 dCi	K9K 796/K9K 830		6.0	11.07	40.5	F	B
8035.601	IN-EX	DUSTER, 1.5 dCi	K9K 856		6.0	11.07	40.5	F	B
8035.601	IN-EX	DUSTER, 1.5 dCi	K9K 884/K9K 892		6.0	11.07	40.5	F	B
8035.601	IN-EX	DUSTER, 1.5 dCi	K9K 896		6.0	11.07	40.5	F	B
8035.601	IN-EX	DUSTER, 1.5 dCi 4x4	K9K 884/K9K 894		6.0	11.07	40.5	F	B
8035.601	IN-EX	DUSTER, 1.5 dCi 4x4	K9K 898		6.0	11.07	40.5	F	B
8035.601	IN-EX	DUSTER, 1.5 dCi 4x4	K9K 898		6.0	11.07	40.5	F	B
8195.601	IN	LOGAN (LS_), 1.4 (LSOA, LSOC,	K7J 710		7.0	12.06	42.0	F	B
8195.601	IN	LOGAN (LS_), 1.4 MPI LPG (LS0	K7J 714/K7J 710		7.0	12.06	42.0	F	B
8035.601	IN-EX	LOGAN (LS_), 1.5 dCi (LS04)	K9K 892		6.0	11.07	40.5	F	B
8035.601	IN-EX	LOGAN (LS_), 1.5 dCi (LS04)	K9K 892		6.0	11.07	40.5	F	B
8035.601	IN-EX	LOGAN (LS_), 1.5 dCi (LS0J, LS0	K9K 790		6.0	11.07	40.5	F	B
8035.601	IN-EX	LOGAN (LS_), 1.5 dCi (LS0K)	K9K 792		6.0	11.07	40.5	F	B
8035.601	IN-EX	LOGAN (LS_), 1.5 dCi (LS0W)	K9K 796		6.0	11.07	40.5	F	B
8195.601	IN	LOGAN (LS_), 1.6 (LSOB, LSOD,	K7M 710		7.0	12.06	42.0	F	B
8035.601	IN-EX	LOGAN EXPRESS (FS_), 1.5 dCi	K9K 892		6.0	11.07	40.5	F	B
8035.601	IN-EX	LOGAN EXPRESS (FS_), 1.5 dCi	K9K 892		6.0	11.07	40.5	F	B
8035.601	IN-EX	LOGAN EXPRESS (FS_), 1.5 dCi	K9K 792		6.0	11.07	40.5	F	B
8035.601	IN-EX	LOGAN EXPRESS (FS_), 1.5 dCi	K9K 796		6.0	11.07	40.5	F	B
8035.601	IN-EX	LOGAN II, 1.5 dCi	K9K 612		6.0	11.07	40.5	F	B
8035.601	IN-EX	LOGAN II, 1.5 dCi	K9K 612		6.0	11.07	40.5	F	B
8195.601	IN	LOGAN MCV (KS_), 1.4	K7J 710		7.0	12.06	42.0	F	B
8035.601	IN-EX	LOGAN MCV (KS_), 1.5 dCi (KS0	K9K 892		6.0	11.07	40.5	F	B
8035.601	IN-EX	LOGAN MCV (KS_), 1.5 dCi (KS0	K9K 892		6.0	11.07	40.5	F	B
8035.601	IN-EX	LOGAN MCV (KS_), 1.5 dCi (KS0	K9K 792		6.0	11.07	40.5	F	B
8035.601	IN-EX	LOGAN MCV (KS_), 1.5 dCi (KS0	K9K 796		6.0	11.07	40.5	F	B
8195.601	IN	LOGAN MCV (KS_), 1.6	K7M 710		7.0	12.06	42.0	F	B
8035.601	IN-EX	LOGAN MCV II, 1.5 dCi	K9K 612		6.0	11.07	40.5	F	B
8035.601	IN-EX	LOGAN MCV II, 1.5 dCi	K9K 612		6.0	11.07	40.5	F	B
8035.601	IN-EX	LOGAN Pick-up (US_), 1.5 dCi	K9K 892		6.0	11.07	40.5	F	B
8035.601	IN-EX	LOGAN Pick-up (US_), 1.5 dCi	K9K 892		6.0	11.07	40.5	F	B

(D1) Internal diameter, (D2) External diameter, (B) Shape, (C) Material

VALVE GUIDES

IVT Ref.	Type	Model	Engine	OEM Ref.	D1	D2	Length	B	C
DACIA									
8035.601	IN-EX	LOGAN Pick-up (US_), 1.5 dCi (U	K9K 792		6.0	11.07	40.5	F	B
8035.601	IN-EX	LOGAN Pick-up (US_), 1.5 dCi (U	K9K 796		6.0	11.07	40.5	F	B
8035.601	IN-EX	SANDERO, 1.5 dCi	K9K 792		6.0	11.07	40.5	F	B
8035.601	IN-EX	SANDERO, 1.5 dCi	K9K 796		6.0	11.07	40.5	F	B
8035.601	IN-EX	SANDERO, 1.5 dCi	K9K 892		6.0	11.07	40.5	F	B
8035.601	IN-EX	SANDERO, 1.5 dCi	K9K 892		6.0	11.07	40.5	F	B
DAIHATSU									
8156.900	IN-EX	CHARMANT (A), 1.3 (A35)	4K	1112624020	8.0	13.04	50.0	P-1-6	G
FIAT									
8146.600	IN-EX	128 (128_), 1.1	128 A.000		8.0	14.06	46.5	F	G
8146.600	IN-EX	128 Familiare (128_), 1.1 (AF)	128 A.000		8.0	14.06	46.5	F	G
8146.600	IN-EX	131 (131_), 1.3 Mirafiori	131 A.000		8.0	14.06	46.5	F	G
8146.600	IN-EX	131 (131_), 1.3 Super Mirafiori	131 B.000		8.0	14.06	46.5	F	G
8146.600	IN-EX	131 (131_), 1.6 (S)	131 A1.000		8.0	14.06	46.5	F	G
8146.600	IN-EX	131 (131_), 1.6 Super	131 C3.000		8.0	14.06	46.5	F	G
8146.600	IN-EX	131 (131_), 1.6 Super Mirafiori (A)	131 B1.000		8.0	14.06	46.5	F	G
8141.100	IN-EX	131 (131_), 2.0 D	8144.65	4726483	8.0	13.03	60.0	A	G1
8146.600	IN-EX	131 (131_), 2.0 Super	131 C4.000		8.0	14.06	46.5	F	G
8141.100	IN-EX	131 (131_), 2.5 D	8144.61	4726483	8.0	13.03	60.0	A	G1
8095.600	IN-EX	131 2.0 D	8144.65	4749395	8.0	13.03	56.0	F	G1
8095.600	IN-EX	131 2.5 D	8144.61	4749395	8.0	13.03	56.0	F	G1
8146.600	IN-EX	131 Familiare/Panorama (131_), 1	131 A.000		8.0	14.06	46.5	F	G
8146.600	IN-EX	131 Familiare/Panorama (131_), 1	131 A1.000		8.0	14.06	46.5	F	G
8146.600	IN-EX	131 Familiare/Panorama (131_), 1	131 C3.000		8.0	14.06	46.5	F	G
8141.100	IN-EX	131 Familiare/Panorama (131_), 2	8144.65	4726483	8.0	13.03	60.0	A	G1
8146.600	IN-EX	131 Familiare/Panorama (131_), 2	131 C4.000		8.0	14.06	46.5	F	G
8141.100	IN-EX	131 Familiare/Panorama (131_), 2	8144.61	4726483	8.0	13.03	60.0	A	G1
8095.600	IN-EX	131 Panorama 2.0 D	8144.65	4749395	8.0	13.03	56.0	F	G1
8095.600	IN-EX	131 Panorama 2.5 SD	8144.61	4749395	8.0	13.03	56.0	F	G1
8141.100	IN-EX	132 (132_), 2.0 D	8144.65	4726483	8.0	13.03	60.0	A	G1
8141.100	IN-EX	132 (132_), 2.5 D	8144.61	4726483	8.0	13.03	60.0	A	G1
8095.600	IN-EX	132 2.0 D	8144.65.300	4749395	8.0	13.03	56.0	F	G1
8095.600	IN-EX	132 2.5 D	8144.61	4749395	8.0	13.03	56.0	F	G1
8003.104	IN-EX	500 0.9	312 A2.000	71769214	5.0	9.06	40.5	A	S03
8003.104	IN-EX	500 0.9	312 A2.000	71769215	5.0	9.06	40.5	A	S03
8008.605	IN-EX	500 1.2	169 A4.000	55190559	5.0	10.03	44.0	F	S06
8008.605	IN-EX	500 1.2	169 A4.000	55190561	5.0	10.03	44.0	F	S06
8008.605	IN-EX	500 1.2 LPG	169 A4.000	55190559	5.0	10.03	44.0	F	S06
8008.605	IN-EX	500 1.2 LPG	169 A4.000	55190561	5.0	10.03	44.0	F	S06
8003.104	IN-EX	500 C 0.9	312 A2.000	71769214	5.0	9.06	40.5	A	S03
8003.104	IN-EX	500 C 0.9	312 A2.000	71769215	5.0	9.06	40.5	A	S03
8008.605	IN-EX	500 C 1.2	169 A4.000	55190559	5.0	10.03	44.0	F	S06
8008.605	IN-EX	500 C 1.2	169 A4.000	55190561	5.0	10.03	44.0	F	S06
8003.104	IN-EX	500L 0.9 Natural Power	312 A2.000	71769214	5.0	9.06	40.5	A	S03
8003.104	IN-EX	500L 0.9 Natural Power	312 A2.000	71769215	5.0	9.06	40.5	A	S03
8000.605	IN-EX	500L 1.4	843 A1.000	46441525	6.0	10.03	39.7	F	S06
8141.100	IN-EX	ARGENTA (132_), 2500 Diesel	8144.61	4726483	8.0	13.03	60.0	A	G1
8141.100	IN-EX	ARGENTA (132_), 2500 Turbodie	8144.61.500.81	4726483	8.0	13.03	60.0	A	G1
8095.600	IN-EX	Argenta 2500 Diesel	8144.61	4749395	8.0	13.03	56.0	F	G1
8095.600	IN-EX	Argenta 2500 Turbo Diesel	8144.61.500.81	4749395	8.0	13.03	56.0	F	G1
8105.600	EX	Barchetta 1.8 16V	183 A1 000	60811090	7.0	13.03	46.0	F	G1
8105.600	EX	Barchetta 1.8 16V	183 A1 000	60811091	7.0	13.03	46.0	F	G1
8105.600	EX	Barchetta 1.8 16V	183 A1 000	7779402	7.0	13.03	46.0	F	G1
8102.600	IN	Barchetta 1.8 16V	183 A1.000	60811087	7.0	13.03	42.5	F	G1
8105.600	EX	Barchetta 1.8 16V	183 A1.000	60811090	7.0	13.03	46.0	F	G1
8105.600	EX	Barchetta 1.8 16V	183 A1.000	60811091	7.0	13.03	46.0	F	G1
8102.600	IN	Barchetta 1.8 16V	183 A1.000	7756897	7.0	13.03	42.5	F	G1
8102.600	IN	Barchetta 1.8 16V	183 A1.000	7757053	7.0	13.03	42.5	F	G1
8105.600	EX	Barchetta 1.8 16V	183 A1.000	7779402	7.0	13.03	46.0	F	G1
8102.600	IN	Barchetta 1.8 16V	188 A6.000	60811087	7.0	13.03	42.5	F	G1

(D1) Internal diameter, (D2) External diameter, (B) Shape, (C) Material

VALVE GUIDES

FIAT

IVT Ref.	Type	Model	Engine	OEM Ref.	D1	D2	Length	B	C
8105.600	EX	Barchetta 1.8 16V	188 A6.000	60811090	7.0	13.03	46.0	F	G1
8105.600	EX	Barchetta 1.8 16V	188 A6.000	60811091	7.0	13.03	46.0	F	G1
8102.600	IN	Barchetta 1.8 16V	188 A6.000	7756897	7.0	13.03	42.5	F	G1
8102.600	IN	Barchetta 1.8 16V	188 A6.000	7757053	7.0	13.03	42.5	F	G1
8105.600	EX	Barchetta 1.8 16V	188 A6.000	7779402	7.0	13.03	46.0	F	G1
8140.600	IN-EX	BRAVA (182_), 1.2 16V 80	182 B2.000	46441525	6.0	10.03	39.7	F	G1
8000.605	IN-EX	Brava 1.2 16V 80	188 A5.000	46441525	6.0	10.03	39.7	F	S06
8086.600	IN-EX	BRAVA 1.6 16V	182 A4 000	020012306A	7.0	13.03	42.5	F	G
8086.600	IN-EX	BRAVA 1.6 16V	182 A4 000	4265699	7.0	13.03	42.5	F	G
8102.600	IN	Brava 1.8 GT 16V	182 A2.000	60811087	7.0	13.03	42.5	F	G1
8105.600	EX	Brava 1.8 GT 16V	182 A2.000	60811090	7.0	13.03	46.0	F	G1
8105.600	EX	Brava 1.8 GT 16V	182 A2.000	60811091	7.0	13.03	46.0	F	G1
8102.600	IN	Brava 1.8 GT 16V	182 A2.000	7756897	7.0	13.03	42.5	F	G1
8102.600	IN	Brava 1.8 GT 16V	182 A2.000	7757053	7.0	13.03	42.5	F	G1
8105.600	EX	Brava 1.8 GT 16V	182 A2.000	7779402	7.0	13.03	46.0	F	G1
8086.600	IN-EX	BRAVO 1.6 16V	182 A4 000	020012306A	7.0	13.03	42.5	F	G
8086.600	IN-EX	BRAVO 1.6 16V	182 A4 000	4265699	7.0	13.03	42.5	F	G
8105.600	EX	BRAVO 1.8 16V	182 A2 000	60811090	7.0	13.03	46.0	F	G1
8105.600	EX	BRAVO 1.8 16V	182 A2 000	60811091	7.0	13.03	46.0	F	G1
8105.600	EX	BRAVO 1.8 16V	182 A2 000	7779402	7.0	13.03	46.0	F	G1
8140.600	IN-EX	BRAVO I (182_), 1.2 16V 80	182 B2.000	46441525	6.0	10.03	39.7	F	G1
8000.605	IN-EX	Bravo I 1.2 16V 80	188 A5.000	46441525	6.0	10.03	39.7	F	S06
8102.600	IN	Bravo I 1.8 GT	182 A2.000	60811087	7.0	13.03	42.5	F	G1
8105.600	EX	Bravo I 1.8 GT	182 A2.000	60811090	7.0	13.03	46.0	F	G1
8105.600	EX	Bravo I 1.8 GT	182 A2.000	60811091	7.0	13.03	46.0	F	G1
8102.600	IN	Bravo I 1.8 GT	182 A2.000	7756897	7.0	13.03	42.5	F	G1
8102.600	IN	Bravo I 1.8 GT	182 A2.000	7757053	7.0	13.03	42.5	F	G1
8105.600	EX	Bravo I 1.8 GT	182 A2.000	7779402	7.0	13.03	46.0	F	G1
8102.600	IN	Bravo I 2.0 HGT 20V	182 B7.000	60811087	7.0	13.03	42.5	F	G1
8105.600	EX	Bravo I 2.0 HGT 20V	182 B7.000	60811090	7.0	13.03	46.0	F	G1
8105.600	EX	Bravo I 2.0 HGT 20V	182 B7.000	60811091	7.0	13.03	46.0	F	G1
8102.600	IN	Bravo I 2.0 HGT 20V	182 B7.000	7756897	7.0	13.03	42.5	F	G1
8102.600	IN	Bravo I 2.0 HGT 20V	182 B7.000	7757053	7.0	13.03	42.5	F	G1
8105.600	EX	Bravo I 2.0 HGT 20V	182 B7.000	7779402	7.0	13.03	46.0	F	G1
8186.105	IN-EX	BRAVO II (198), 1.4 T-Jet	198 A4.000	55210016	5.0	10.03	46.7	A	S06
8186.105	IN-EX	BRAVO II (198), 1.6 D Multijet	198 A2.000	55210016	5.0	10.03	46.7	A	S06
8186.105	IN-EX	BRAVO II (198), 1.6 D Multijet	844 A3.000/198 A3.000	55210016	5.0	10.03	46.7	A	S06
8186.105	IN-EX	BRAVO II (198), 1.6 D Multijet	955 A4.000	55210016	5.0	10.03	46.7	A	S06
8186.105	IN-EX	BRAVO II (198), 1.9 D Multijet	937 A5.000	55210016	5.0	10.03	46.7	A	S06
8186.105	IN-EX	BRAVO II (198), 2.0 D Multijet	198 A5.000	55210016	5.0	10.03	46.7	A	S06
8186.105	IN-EX	BRAVO II (198), 2.0 D Multijet	844 A2.000/198 A8.000	55210016	5.0	10.03	46.7	A	S06
8000.605	IN-EX	Bravo II 1.4	192 B2.000	46441525	6.0	10.03	39.7	F	S06
8000.605	IN-EX	Bravo II 1.4 LPG	192 B2.000	46441525	6.0	10.03	39.7	F	S06
8000.605	IN-EX	Bravo II 1.4 T-Jet	198 A1.000	46441525	6.0	10.03	39.7	F	S06
8000.605	IN-EX	Bravo II 1.4 T-Jet	198 A4.000	46441525	6.0	10.03	39.7	F	S06
8141.100	IN-EX	CAMPAGNOLA, 2.4 D	8144.61.200	4726483	8.0	13.03	60.0	A	G1
8197.605	IN-EX	CINQUECENTO (170), 1.1 Sporti	176 B2.000	46515713	7.0	13.03	40.0	F	S06
8197.605	IN-EX	CINQUECENTO (170), 1.1 Sporti	176 B2.000	7765039	7.0	13.03	40.0	F	S06
8105.600	EX	Coupé 1.8 16V	183 A1 000	60811090	7.0	13.03	46.0	F	G1
8105.600	EX	Coupé 1.8 16V	183 A1 000	60811091	7.0	13.03	46.0	F	G1
8105.600	EX	Coupé 1.8 16V	183 A1 000	7779402	7.0	13.03	46.0	F	G1
8102.600	IN	Coupé 1.8 16V	183 A1.000	60811087	7.0	13.03	42.5	F	G1
8105.600	EX	Coupé 1.8 16V	183 A1.000	60811090	7.0	13.03	46.0	F	G1
8105.600	EX	Coupé 1.8 16V	183 A1.000	60811091	7.0	13.03	46.0	F	G1
8102.600	IN	Coupé 1.8 16V	183 A1.000	7756897	7.0	13.03	42.5	F	G1
8102.600	IN	Coupé 1.8 16V	183 A1.000	7757053	7.0	13.03	42.5	F	G1
8105.600	EX	Coupé 1.8 16V	183 A1.000	7779402	7.0	13.03	46.0	F	G1
8141.100	IN-EX	CROMA (154_), 2500 D	8144.67	4726483	8.0	13.03	60.0	A	G1
8141.100	IN-EX	CROMA (154_), 2500 TD (154.AE	8144.91.2000	4726483	8.0	13.03	60.0	A	G1
8141.100	IN-EX	CROMA (154_), 2500 TDE	8144.97 S	4726483	8.0	13.03	60.0	A	G1
8186.105	IN-EX	CROMA (194), 1.9 D Multijet	939 A2.000	55210016	5.0	10.03	46.7	A	S06
8130.104	IN-EX	CROMA (194_), 2.2 16V	194 A1.000	71739350	6.0	10.03	36.0	A	S03

(D1) Internal diameter, (D2) External diameter, (B) Shape, (C) Material

VALVE GUIDES

IVT Ref.	Type	Model	Engine	OEM Ref.	D1	D2	Length	B	C
FIAT									
8095.600	IN-EX	Croma 2500 D	8144.67.2500	4749395	8.0	13.03	56.0	F	G1
8095.600	IN-EX	Croma 2500 TD	8144.91.2000	4749395	8.0	13.03	56.0	F	G1
8095.600	IN-EX	Croma 2500 TD	8144.91.2200	4749395	8.0	13.03	56.0	F	G1
8095.600	IN-EX	Croma 2500 TD	8144.97	4749395	8.0	13.03	56.0	F	G1
8095.600	IN-EX	Croma 2500 TD	8144.97Y	4749395	8.0	13.03	56.0	F	G1
8095.600	IN-EX	Croma 2500 TDE	8144.91.2200	4749395	8.0	13.03	56.0	F	G1
8095.600	IN-EX	Croma 2500 TDE	8144.97S	4749395	8.0	13.03	56.0	F	G1
8197.605	IN-EX	DOBLO (119), 1.2 (223AXA1A)	223 A5.000	46515713	7.0	13.03	40.0	F	S06
8197.605	IN-EX	DOBLO (119), 1.2 (223AXA1A)	223 A5.000	7765039	7.0	13.03	40.0	F	S06
8008.605	IN-EX	Doblo 1.4	350 A1.000	55190559	5.0	10.03	44.0	F	S06
8008.605	IN-EX	Doblo 1.4	350 A1.000	55190561	5.0	10.03	44.0	F	S06
8000.605	IN-EX	Doblo 1.4	843 A1.000	46441525	6.0	10.03	39.7	F	S06
8197.605	IN-EX	DOBLO Cargo (223), 1.2 (223ZXA	223 A5.000	46515713	7.0	13.03	40.0	F	S06
8197.605	IN-EX	DOBLO Cargo (223), 1.2 (223ZXA	223 A5.000	7765039	7.0	13.03	40.0	F	S06
8008.605	IN-EX	Doblo Cargo 1.4	350 A1.000	55190559	5.0	10.03	44.0	F	S06
8008.605	IN-EX	Doblo Cargo 1.4	350 A1.000	55190561	5.0	10.03	44.0	F	S06
8000.605	IN-EX	Doblo Furgonato 1.4	843 A1.000	46441525	6.0	10.03	39.7	F	S06
8000.605	IN-EX	Doblo MPV Furgonato 1.4	198 A4.000	46441525	6.0	10.03	39.7	F	S06
8000.605	IN-EX	Doblo MPV Furgonato 1.4 Natural	198 A4.000	46441525	6.0	10.03	39.7	F	S06
8000.605	IN-EX	Doblo MPV Spacewagon 1.4	198 A4.000	46441525	6.0	10.03	39.7	F	S06
8000.605	IN-EX	Doblo MPV Spacewagon 1.4	843 A1.000	46441525	6.0	10.03	39.7	F	S06
8000.605	IN-EX	Doblo MPV Spacewagon 1.4 Natu	198 A4.000	46441525	6.0	10.03	39.7	F	S06
8095.600	IN-EX	Ducato 2.5 D	8144.67.200	4749395	8.0	13.03	56.0	F	G1
8095.600	IN-EX	Ducato 2.5 D	8144.67.2500	4749395	8.0	13.03	56.0	F	G1
8095.600	IN-EX	Ducato 2.5 D 4x4	8144.67.200	4749395	8.0	13.03	56.0	F	G1
8095.600	IN-EX	Ducato 2.5 D 4x4	8144.67.2500	4749395	8.0	13.03	56.0	F	G1
8095.600	IN-EX	Ducato 2.5 TD	8140.27.200	4749395	8.0	13.03	56.0	F	G1
8095.600	IN-EX	Ducato 2.5 TD	8140.47	4749395	8.0	13.03	56.0	F	G1
8095.600	IN-EX	Ducato 2.5 TD	8140.47.3731	4749395	8.0	13.03	56.0	F	G1
8095.600	IN-EX	Ducato 2.5 TD	8140.67.2100	4749395	8.0	13.03	56.0	F	G1
8095.600	IN-EX	Ducato 2.5 TD 4x4	8140.27.200	4749395	8.0	13.03	56.0	F	G1
8095.600	IN-EX	Ducato 2.5 TD 4x4	8140.47	4749395	8.0	13.03	56.0	F	G1
8095.600	IN-EX	Ducato 2.5 TD 4x4	8140.47.3731	4749395	8.0	13.03	56.0	F	G1
8095.600	IN-EX	Ducato 2.5 TD 4x4	8140.67.2100	4749395	8.0	13.03	56.0	F	G1
8095.600	IN-EX	Ducato 2.5 TDI	8140.27.200	4749395	8.0	13.03	56.0	F	G1
8095.600	IN-EX	Ducato 2.5 TDI	8140.67.2100	4749395	8.0	13.03	56.0	F	G1
8095.600	IN-EX	Ducato 2.5 TDI 4x4	8140.27.200	4749395	8.0	13.03	56.0	F	G1
8095.600	IN-EX	Ducato 2.5 TDI 4x4	8140.67.2100	4749395	8.0	13.03	56.0	F	G1
8095.600	IN-EX	Ducato 2.8 D	8140.63.2800	4749395	8.0	13.03	56.0	F	G1
8095.600	IN-EX	Ducato 2.8 iDTD 4x4	8140.43	4749395	8.0	13.03	56.0	F	G1
8095.600	IN-EX	Ducato 2.8 JTD	8140.43S	4749395	8.0	13.03	56.0	F	G1
8095.600	IN-EX	Ducato 2.8 JTD 4x4	8140.43S	4749395	8.0	13.03	56.0	F	G1
8095.600	IN-EX	Ducato 2.8 TDI	8140.43	4749395	8.0	13.03	56.0	F	G1
8095.600	IN-EX	Ducato Autobus 2.5 TDI 4x4	8140.27.200	4749395	8.0	13.03	56.0	F	G1
8095.600	IN-EX	Ducato Autobus 2.5 TDI 4x4	8140.67.2100	4749395	8.0	13.03	56.0	F	G1
8095.600	IN-EX	Ducato Autobus 2.5 TDI Panoram	8140.27.200	4749395	8.0	13.03	56.0	F	G1
8095.600	IN-EX	Ducato Autobus 2.5 TDI Panoram	8140.67.2100	4749395	8.0	13.03	56.0	F	G1
8095.600	IN-EX	Ducato Autobus 2.8 D	8140.63.2800	4749395	8.0	13.03	56.0	F	G1
8095.600	IN-EX	Ducato Autobus 2.8 JTD	8140.43S	4749395	8.0	13.03	56.0	F	G1
8095.600	IN-EX	Ducato Autobus 2.8 JTD 4x4	8140.43S	4749395	8.0	13.03	56.0	F	G1
8095.600	IN-EX	Ducato Autobus 2.8 TDI	8140.43	4749395	8.0	13.03	56.0	F	G1
8095.600	IN-EX	Ducato Autobus 2.8 TDI 4x4	8140.43	4749395	8.0	13.03	56.0	F	G1
8165.104	IN-EX	DUCATO Bus (230), 1.9 D	D9B/DJY/D9B (XUD9A)	0220A6	5.5	9.55	34.0	A	S03
8178.601	IN-EX	DUCATO Bus (230), 1.9 TD	DJY	9456028380	8.0	14.05	48.0	F	B
8178.601	IN-EX	DUCATO Bus (230), 1.9 TD	DJY	9456028480	8.0	14.05	48.0	F	B
8165.104	IN-EX	DUCATO Bus (230), 2.8 D	8140.63	0220A6	5.5	9.55	34.0	A	S03
8131.600	IN-EX	DUCATO Bus (230_), 2.0 4x4	RFW	7701461009	8.0	13.07	45.0	F	G
8131.600	IN-EX	DUCATO Bus (230_), 2.0 Panora	RFW	7701461009	8.0	13.07	45.0	F	G
8134.601	IN-EX	DUCATO Bus (230_), 2.0 Panora	RFW	9456001309	8.0	13.07	45.0	F	B
8047.103	IN-EX	DUCATO Bus (244, Z_), 2.3 JTD	F1AE0481C	504053804	6.0	10.03	49.0	A	S01
8047.103	IN-EX	DUCATO Bus (244, Z_), 2.8 JTD	8140.43S	504053804	6.0	10.03	49.0	A	S01
8047.103	IN-EX	DUCATO Bus (244, Z_), 2.8 JTD	8140.43S	504053804	6.0	10.03	49.0	A	S01

(D1) Internal diameter, (D2) External diameter, (B) Shape, (C) Material

VALVE GUIDES

FIAT

IVT Ref.	Type	Model	Engine	OEM Ref.	D1	D2	Length	B	C
8134.601	IN-EX	DUCATO Bus (244_), 2.0	RFL	9456001309	8.0	13.07	45.0	F	B
8134.601	IN-EX	DUCATO Bus (244_), 2.0 4x4	RFL	9456001309	8.0	13.07	45.0	F	B
8134.601	IN-EX	DUCATO Bus (244_), 2.0 Bipower	RFL	9456001309	8.0	13.07	45.0	F	B
8047.103	IN-EX	DUCATO Bus (250, 290), 110 Mul	F1AE3481G	504053804	6.0	10.03	49.0	A	S01
8047.103	IN-EX	DUCATO Bus (250, 290), 120 Mul	F1AE0481D	504053804	6.0	10.03	49.0	A	S01
8047.103	IN-EX	DUCATO Bus (250, 290), 130 Mul	F1AE3481D	504053804	6.0	10.03	49.0	A	S01
8047.103	IN-EX	DUCATO Bus (250, 290), 150 Mul	F1AE3481E	504053804	6.0	10.03	49.0	A	S01
8047.103	IN-EX	DUCATO Bus (250, 290), 150 Mul	F1CE3481N	504053804	6.0	10.03	49.0	A	S01
8047.103	IN-EX	DUCATO Bus (250, 290), 160 Mul	F1CE3481M/F1CE0481D	504053804	6.0	10.03	49.0	A	S01
8047.103	IN-EX	DUCATO Bus (250, 290), 180 Mul	F1CE3481E	504053804	6.0	10.03	49.0	A	S01
8095.600	IN-EX	Ducato Furgonato 2.4 D	8144.61	4749395	8.0	13.03	56.0	F	G1
8095.600	IN-EX	Ducato Furgonato 2.4 D	8144.67.200	4749395	8.0	13.03	56.0	F	G1
8095.600	IN-EX	Ducato Furgonato 2.4 D	8144.67.2500	4749395	8.0	13.03	56.0	F	G1
8095.600	IN-EX	Ducato Furgonato 2.5 D	8144.67.200	4749395	8.0	13.03	56.0	F	G1
8095.600	IN-EX	Ducato Furgonato 2.5 D	8144.67.200	4749395	8.0	13.03	56.0	F	G1
8095.600	IN-EX	Ducato Furgonato 2.5 D	8144.67.2500	4749395	8.0	13.03	56.0	F	G1
8095.600	IN-EX	Ducato Furgonato 2.5 D	8144.67.2500	4749395	8.0	13.03	56.0	F	G1
8095.600	IN-EX	Ducato Furgonato 2.5 D 4x4	8140.27.200	4749395	8.0	13.03	56.0	F	G1
8095.600	IN-EX	Ducato Furgonato 2.5 D 4x4	8140.67.2100	4749395	8.0	13.03	56.0	F	G1
8095.600	IN-EX	Ducato Furgonato 2.5 TD	8140.67.2100	4749395	8.0	13.03	56.0	F	G1
8095.600	IN-EX	Ducato Furgonato 2.5 TD 4x4	8144.2100	4749395	8.0	13.03	56.0	F	G1
8095.600	IN-EX	Ducato Furgonato 2.5 TDI	8140.27.200	4749395	8.0	13.03	56.0	F	G1
8095.600	IN-EX	Ducato Furgonato 2.5 TDI	8140.67.2100	4749395	8.0	13.03	56.0	F	G1
8095.600	IN-EX	Ducato Furgonato 2.5 TDI 4x4	8140.27.200	4749395	8.0	13.03	56.0	F	G1
8095.600	IN-EX	Ducato Furgonato 2.5 TDI 4x4	8140.67.2100	4749395	8.0	13.03	56.0	F	G1
8095.600	IN-EX	Ducato Furgonato 2.8 D	8140.63.2800	4749395	8.0	13.03	56.0	F	G1
8095.600	IN-EX	Ducato Furgonato 2.8 D 4x4	8140.63.2800	4749395	8.0	13.03	56.0	F	G1
8095.600	IN-EX	Ducato Furgonato 2.8 TDI	8140.43	4749395	8.0	13.03	56.0	F	G1
8095.600	IN-EX	Ducato Furgonato 2.8 TDI 4x4	8140.43	4749395	8.0	13.03	56.0	F	G1
8131.600	IN-EX	DUCATO Kasten (230_), 2.0	RFW	7701461009	8.0	13.07	45.0	F	G
8134.601	IN-EX	DUCATO Kasten (230_), 2.0	RFW	9456001309	8.0	13.07	45.0	F	B
8131.600	IN-EX	DUCATO Kasten (230_), 2.0 4x4	RFW	7701461009	8.0	13.07	45.0	F	G
8178.601	IN-EX	DUCATO Kasten (230L), 1.9 D	DHX (XUD9TF/L)	9456028380	8.0	14.05	48.0	F	B
8178.601	IN-EX	DUCATO Kasten (230L), 1.9 D	DHX (XUD9TF/L)	9456028480	8.0	14.05	48.0	F	B
8178.601	IN-EX	DUCATO Kasten (230L), 1.9 TD	DJY	9456028380	8.0	14.05	48.0	F	B
8178.601	IN-EX	DUCATO Kasten (230L), 1.9 TD	DJY	9456028480	8.0	14.05	48.0	F	B
8047.103	IN-EX	DUCATO Kasten (244), 2.3 JTD	F1AE0481C	504053804	6.0	10.03	49.0	A	S01
8047.103	IN-EX	DUCATO Kasten (244), 2.8 JTD	8140.43S	504053804	6.0	10.03	49.0	A	S01
8047.103	IN-EX	DUCATO Kasten (244), 2.8 JTD 4	8140.43S	504053804	6.0	10.03	49.0	A	S01
8134.601	IN-EX	DUCATO Kasten (244_), 2.0	RFL	9456001309	8.0	13.07	45.0	F	B
8134.601	IN-EX	DUCATO Kasten (244_), 2.0 4x4	RFL	9456001309	8.0	13.07	45.0	F	B
8134.601	IN-EX	DUCATO Kasten (244_), 2.0 Bipo	RFL	9456001309	8.0	13.07	45.0	F	B
8047.103	IN-EX	DUCATO Kasten (250, 290), 110	F1AE3481G	504053804	6.0	10.03	49.0	A	S01
8047.103	IN-EX	DUCATO Kasten (250, 290), 120	F1AE0481D/FPT	504053804	6.0	10.03	49.0	A	S01
8047.103	IN-EX	DUCATO Kasten (250, 290), 130	F1AE0481N/F1AE3481D	504053804	6.0	10.03	49.0	A	S01
8047.103	IN-EX	DUCATO Kasten (250, 290), 150	F1AE3481E	504053804	6.0	10.03	49.0	A	S01
8047.103	IN-EX	DUCATO Kasten (250, 290), 150	F1CE3481N	504053804	6.0	10.03	49.0	A	S01
8047.103	IN-EX	DUCATO Kasten (250, 290), 160	F1CE0481D	504053804	6.0	10.03	49.0	A	S01
8047.103	IN-EX	DUCATO Kasten (250, 290), 160	F1CE3481M	504053804	6.0	10.03	49.0	A	S01
8047.103	IN-EX	DUCATO Kasten (250, 290), 180	F1CE3481E	504053804	6.0	10.03	49.0	A	S01
8141.100	IN-EX	DUCATO Kasten (280_), 2.4 D	8144.61	4726483	8.0	13.03	60.0	A	G1
8141.100	IN-EX	DUCATO Kasten (280_), 2.5 TD 4	8144.21	4726483	8.0	13.03	60.0	A	G1
8141.100	IN-EX	DUCATO Panorama (280_), 2.4 D	8144.61	4726483	8.0	13.03	60.0	A	G1
8141.100	IN-EX	DUCATO Panorama (280_), 2.5 T	8144.21.220/8144.21	4726483	8.0	13.03	60.0	A	G1
8141.100	IN-EX	DUCATO Panorama (280_), 2.5 T	8144.21	4726483	8.0	13.03	60.0	A	G1
8095.600	IN-EX	Ducato Panorama 2.4 D	8144.61	4749395	8.0	13.03	56.0	F	G1
8095.600	IN-EX	Ducato Panorama 2.4 D	8144.67.200	4749395	8.0	13.03	56.0	F	G1
8095.600	IN-EX	Ducato Panorama 2.4 D	8144.67.2500	4749395	8.0	13.03	56.0	F	G1
8095.600	IN-EX	Ducato Panorama 2.5 D	8144.67.200	4749395	8.0	13.03	56.0	F	G1
8095.600	IN-EX	Ducato Panorama 2.5 D	8144.67.2500	4749395	8.0	13.03	56.0	F	G1
8095.600	IN-EX	Ducato Panorama 2.5 D 4x4	8144.67.200	4749395	8.0	13.03	56.0	F	G1
8095.600	IN-EX	Ducato Panorama 2.5 D 4x4	8144.67.2500	4749395	8.0	13.03	56.0	F	G1

(D1) Internal diameter, (D2) External diameter, (B) Shape, (C) Material

VALVE GUIDES

FIAT

IVT Ref.	Type	Model	Engine	OEM Ref.	D1	D2	Length	B	C
8095.600	IN-EX	Ducato Panorama 2.5 TD	8144.21	4749395	8.0	13.03	56.0	F	G1
8095.600	IN-EX	Ducato Panorama 2.5 TD 4x4	8144.21	4749395	8.0	13.03	56.0	F	G1
8178.601	IN-EX	DUCATO Pritsche/Fahrgestell (23	DHX (XUD9TF/L)	9456028380	8.0	14.05	48.0	F	B
8178.601	IN-EX	DUCATO Pritsche/Fahrgestell (23	DHX (XUD9TF/L)	9456028480	8.0	14.05	48.0	F	B
8178.601	IN-EX	DUCATO Pritsche/Fahrgestell (23	DJY	9456028380	8.0	14.05	48.0	F	B
8178.601	IN-EX	DUCATO Pritsche/Fahrgestell (23	DJY	9456028480	8.0	14.05	48.0	F	B
8131.600	IN-EX	DUCATO Pritsche/Fahrgestell (23	RFW	7701461009	8.0	13.07	45.0	F	G
8134.601	IN-EX	DUCATO Pritsche/Fahrgestell (23	RFW	9456001309	8.0	13.07	45.0	F	B
8047.103	IN-EX	DUCATO Pritsche/Fahrgestell (24	F1AE0481C	504053804	6.0	10.03	49.0	A	S01
8047.103	IN-EX	DUCATO Pritsche/Fahrgestell (24	8140.43S	504053804	6.0	10.03	49.0	A	S01
8047.103	IN-EX	DUCATO Pritsche/Fahrgestell (24	8140.43S	504053804	6.0	10.03	49.0	A	S01
8134.601	IN-EX	DUCATO Pritsche/Fahrgestell (24	RFL	9456001309	8.0	13.07	45.0	F	B
8047.103	IN-EX	DUCATO Pritsche/Fahrgestell (25	F1AE3481G	504053804	6.0	10.03	49.0	A	S01
8047.103	IN-EX	DUCATO Pritsche/Fahrgestell (25	F1AE0481D	504053804	6.0	10.03	49.0	A	S01
8047.103	IN-EX	DUCATO Pritsche/Fahrgestell (25	F1AE0481N/F1AE3481D	504053804	6.0	10.03	49.0	A	S01
8047.103	IN-EX	DUCATO Pritsche/Fahrgestell (25	F1AE3481E	504053804	6.0	10.03	49.0	A	S01
8047.103	IN-EX	DUCATO Pritsche/Fahrgestell (25	F1CE3481N	504053804	6.0	10.03	49.0	A	S01
8047.103	IN-EX	DUCATO Pritsche/Fahrgestell (25	F1CE0481D	504053804	6.0	10.03	49.0	A	S01
8047.103	IN-EX	DUCATO Pritsche/Fahrgestell (25	F1CE3481M	504053804	6.0	10.03	49.0	A	S01
8047.103	IN-EX	DUCATO Pritsche/Fahrgestell (25	F1CE3481E	504053804	6.0	10.03	49.0	A	S01
8141.100	IN-EX	DUCATO Pritsche/Fahrgestell (28	8144.21	4726483	8.0	13.03	60.0	A	G1
8146.600	IN-EX	DUNA (146_), 1.7 DS	149 B3.000		8.0	14.06	46.5	F	G
8146.600	IN-EX	DUNA Weekend (146_), 1.7 DS	149 B3.000		8.0	14.06	46.5	F	G
8146.600	IN-EX	ELBA (146_), 1.7 D	146 B2.000		8.0	14.06	46.5	F	G
8146.600	IN-EX	FIORINO (147_), 1.5	149 C1.000		8.0	14.06	46.5	F	G
8146.600	IN-EX	FIORINO (147_), 1.7 D	149 B2.000		8.0	14.06	46.5	F	G
8146.600	IN-EX	FIORINO (147_), 1.7 D	149 B3.000		8.0	14.06	46.5	F	G
8008.605	IN-EX	Fiorino Furgonato 1.4 Natural Pow	350 A1.000	55190559	5.0	10.03	44.0	F	S06
8008.605	IN-EX	Fiorino Furgonato 1.4 Natural Pow	350 A1.000	55190561	5.0	10.03	44.0	F	S06
8146.600	IN-EX	FIORINO Kasten (146_), 60 1.7 D	146 B2.000		8.0	14.06	46.5	F	G
8146.600	IN-EX	FIORINO Kasten (146_), 60 1.7 D	149 B3.000		8.0	14.06	46.5	F	G
8146.600	IN-EX	FIORINO Kasten (146_), 70 i.e. 1.	146 C5.000/146 D5.000		8.0	14.06	46.5	F	G
8146.600	IN-EX	FIORINO Kasten (146_), 75 i.e. 1.	149 C1.000		8.0	14.06	46.5	F	G
8146.600	IN-EX	FIORINO Kasten (146_), 75 i.e. 1.	146 D6.000/146 C6.000		8.0	14.06	46.5	F	G
8159.601	IN-EX	FIORINO Kasten/Kombi (225), 1.4	KFT/KFV	9456069680	7.0	13.06	47.6	F	B
8146.600	IN-EX	FIORINO Pick up (146_), 1.4	146 D5.000		8.0	14.06	46.5	F	G
8146.600	IN-EX	FIORINO Pick up (146_), 1.6	146 D6.000/146 C6.000		8.0	14.06	46.5	F	G
8146.600	IN-EX	FIORINO Pick up (146_), 1.7 D	146 B2.000		8.0	14.06	46.5	F	G
8146.600	IN-EX	FIORINO Pick up (146_), 1.7 D	149 B3.000		8.0	14.06	46.5	F	G
8186.105	IN-EX	FREEMONT (JF_), 2.0 JTD	939 B5.000	55210016	5.0	10.03	46.7	A	S06
8186.105	IN-EX	FREEMONT (JF_), 2.0 JTD	940 A5.000/939 B5.000	55210016	5.0	10.03	46.7	A	S06
8186.105	IN-EX	FREEMONT (JF_), 2.0 JTD 4x4	939 B5.000	55210016	5.0	10.03	46.7	A	S06
8186.105	IN-EX	GRANDE PUNTO (199), 1.6 D Mu	955 A3.000	55210016	5.0	10.03	46.7	A	S06
8140.600	IN-EX	IDEA (350_), 1.4	192 B2.000	46441525	6.0	10.03	39.7	F	G1
8000.605	IN-EX	Idea 1.2 16V	188 A5.000	46441525	6.0	10.03	39.7	F	S06
8000.605	IN-EX	Idea 1.4	192 B2.000	46441525	6.0	10.03	39.7	F	S06
8008.605	IN-EX	Idea 1.4	350 A1.000	55190559	5.0	10.03	44.0	F	S06
8008.605	IN-EX	Idea 1.4	350 A1.000	55190561	5.0	10.03	44.0	F	S06
8000.605	IN-EX	Idea 1.4 16V	843 A1.000	46441525	6.0	10.03	39.7	F	S06
8008.605	IN-EX	Idea 1.4 LPG	350 A1.000	55190559	5.0	10.03	44.0	F	S06
8008.605	IN-EX	Idea 1.4 LPG	350 A1.000	55190561	5.0	10.03	44.0	F	S06
8186.105	IN-EX	IDEA, 1.6 D Multijet	350 A2.000	55210016	5.0	10.03	46.7	A	S06
8008.605	IN-EX	Linea 1.4	350 A1.000	55190559	5.0	10.03	44.0	F	S06
8008.605	IN-EX	Linea 1.4	350 A1.000	55190561	5.0	10.03	44.0	F	S06
8000.605	IN-EX	Linea 1.4 T-Jet	198 A4.000	46441525	6.0	10.03	39.7	F	S06
8140.600	IN-EX	MAREA (185_), 1.2 16V	182 B2.000	46441525	6.0	10.03	39.7	F	G1
8086.600	IN-EX	MAREA 1.6 16V	182 A4 000	020012306A	7.0	13.03	42.5	F	G
8086.600	IN-EX	MAREA 1.6 16V	182 A4 000	4265699	7.0	13.03	42.5	F	G
8102.600	IN	Marea 1.8 115 16V	182 A2.000	60811087	7.0	13.03	42.5	F	G1
8105.600	EX	Marea 1.8 115 16V	182 A2.000	60811090	7.0	13.03	46.0	F	G1
8105.600	EX	Marea 1.8 115 16V	182 A2.000	60811091	7.0	13.03	46.0	F	G1
8102.600	IN	Marea 1.8 115 16V	182 A2.000	7756897	7.0	13.03	42.5	F	G1

(D1) Internal diameter, (D2) External diameter, (B) Shape, (C) Material

VALVE GUIDES

IVT Ref.	Type	Model	Engine	OEM Ref.	D1	D2	Length	B	C
FIAT									
8102.600	IN	Marea 1.8 115 16V	182 A2.000	7757053	7.0	13.03	42.5	F	G1
8105.600	EX	Marea 1.8 115 16V	182 A2.000	7779402	7.0	13.03	46.0	F	G1
8105.600	EX	MAREA 1.8 16V	182 A2 000	60811090	7.0	13.03	46.0	F	G1
8105.600	EX	MAREA 1.8 16V	182 A2 000	60811091	7.0	13.03	46.0	F	G1
8105.600	EX	MAREA 1.8 16V	182 A2 000	7779402	7.0	13.03	46.0	F	G1
8102.600	IN	Marea 2.0 150 20V	185 A8.000	60811087	7.0	13.03	42.5	F	G1
8105.600	EX	Marea 2.0 150 20V	185 A8.000	60811090	7.0	13.03	46.0	F	G1
8105.600	EX	Marea 2.0 150 20V	185 A8.000	60811091	7.0	13.03	46.0	F	G1
8102.600	IN	Marea 2.0 150 20V	185 A8.000	7756897	7.0	13.03	42.5	F	G1
8102.600	IN	Marea 2.0 150 20V	185 A8.000	7757053	7.0	13.03	42.5	F	G1
8105.600	EX	Marea 2.0 150 20V	185 A8.000	7779402	7.0	13.03	46.0	F	G1
8102.600	IN	Marea 2.0 155 20V	182 B7.000	60811087	7.0	13.03	42.5	F	G1
8105.600	EX	Marea 2.0 155 20V	182 B7.000	60811090	7.0	13.03	46.0	F	G1
8105.600	EX	Marea 2.0 155 20V	182 B7.000	60811091	7.0	13.03	46.0	F	G1
8102.600	IN	Marea 2.0 155 20V	182 B7.000	7756897	7.0	13.03	42.5	F	G1
8102.600	IN	Marea 2.0 155 20V	182 B7.000	7757053	7.0	13.03	42.5	F	G1
8105.600	EX	Marea 2.0 155 20V	182 B7.000	7779402	7.0	13.03	46.0	F	G1
8140.600	IN-EX	MAREA Weekend (185_), 1.2 16V	182 B2.000	46441525	6.0	10.03	39.7	F	G1
8102.600	IN	Marea Weekend 1.8 115 16V	182 A2.000	60811087	7.0	13.03	42.5	F	G1
8105.600	EX	Marea Weekend 1.8 115 16V	182 A2.000	60811090	7.0	13.03	46.0	F	G1
8105.600	EX	Marea Weekend 1.8 115 16V	182 A2.000	60811091	7.0	13.03	46.0	F	G1
8102.600	IN	Marea Weekend 1.8 115 16V	182 A2.000	7756897	7.0	13.03	42.5	F	G1
8102.600	IN	Marea Weekend 1.8 115 16V	182 A2.000	7757053	7.0	13.03	42.5	F	G1
8105.600	EX	Marea Weekend 1.8 115 16V	182 A2.000	7779402	7.0	13.03	46.0	F	G1
8102.600	IN	Marea Weekend 2.0 150 20V	185 A8.000	60811087	7.0	13.03	42.5	F	G1
8105.600	EX	Marea Weekend 2.0 150 20V	185 A8.000	60811090	7.0	13.03	46.0	F	G1
8105.600	EX	Marea Weekend 2.0 150 20V	185 A8.000	60811091	7.0	13.03	46.0	F	G1
8102.600	IN	Marea Weekend 2.0 150 20V	185 A8.000	7756897	7.0	13.03	42.5	F	G1
8102.600	IN	Marea Weekend 2.0 150 20V	185 A8.000	7757053	7.0	13.03	42.5	F	G1
8105.600	EX	Marea Weekend 2.0 150 20V	185 A8.000	7779402	7.0	13.03	46.0	F	G1
8102.600	IN	Marea Weekend 2.0 155 20V	182 B7.000	60811087	7.0	13.03	42.5	F	G1
8105.600	EX	Marea Weekend 2.0 155 20V	182 B7.000	60811090	7.0	13.03	46.0	F	G1
8105.600	EX	Marea Weekend 2.0 155 20V	182 B7.000	60811091	7.0	13.03	46.0	F	G1
8102.600	IN	Marea Weekend 2.0 155 20V	182 B7.000	7756897	7.0	13.03	42.5	F	G1
8102.600	IN	Marea Weekend 2.0 155 20V	182 B7.000	7757053	7.0	13.03	42.5	F	G1
8105.600	EX	Marea Weekend 2.0 155 20V	182 B7.000	7779402	7.0	13.03	46.0	F	G1
8086.600	IN-EX	MARENGO 1.9 TD	182 A8 000	020012306A	7.0	13.03	42.5	F	G
8086.600	IN-EX	MARENGO 1.9 TD	182 A8 000	4265699	7.0	13.03	42.5	F	G
8086.600	IN-EX	MULTIPLA 1.6ie 16V SX / LX	***** 1581 ccm	020012306A	7.0	13.03	42.5	F	G
8086.600	IN-EX	MULTIPLA 1.6ie 16V SX / LX	***** 1581 ccm	4265699	7.0	13.03	42.5	F	G
8086.600	IN-EX	MULTIPLA 100 1.6ie 16V Bipower	***** 1581 ccm	020012306A	7.0	13.03	42.5	F	G
8086.600	IN-EX	MULTIPLA 100 1.6ie 16V Bipower	***** 1581 ccm	4265699	7.0	13.03	42.5	F	G
8197.605	IN-EX	PALIO (178BX), 1.2	178 B5.000/178 E2.000/176	46515713	7.0	13.03	40.0	F	S06
8197.605	IN-EX	PALIO (178BX), 1.2	178 B5.000/178 E2.000/176	7765039	7.0	13.03	40.0	F	S06
8197.605	IN-EX	PALIO (178BX), 1.2	178 B7.045/178 C4.066/188	46515713	7.0	13.03	40.0	F	S06
8197.605	IN-EX	PALIO (178BX), 1.2	178 B7.045/178 C4.066/188	7765039	7.0	13.03	40.0	F	S06
8197.605	IN-EX	PALIO Weekend (178DX), 1.2 (17	178 B5.000	46515713	7.0	13.03	40.0	F	S06
8197.605	IN-EX	PALIO Weekend (178DX), 1.2 (17	178 B5.000	7765039	7.0	13.03	40.0	F	S06
8197.605	IN-EX	PALIO Weekend (178DX), 1.2 (17	178 C4.066/188 A4.000	46515713	7.0	13.03	40.0	F	S06
8197.605	IN-EX	PALIO Weekend (178DX), 1.2 (17	178 C4.066/188 A4.000	7765039	7.0	13.03	40.0	F	S06
8197.605	IN-EX	PALIO Weekend (178DX), 1.2 LP	188 A4.000	46515713	7.0	13.03	40.0	F	S06
8197.605	IN-EX	PALIO Weekend (178DX), 1.2 LP	188 A4.000	7765039	7.0	13.03	40.0	F	S06
8000.605	IN-EX	Palio Weekend 1.2	188 A5.000	46441525	6.0	10.03	39.7	F	S06
8086.600	IN-EX	PALIO Weekend 1.6 16V	178 B3 000	020012306A	7.0	13.03	42.5	F	G
8086.600	IN-EX	PALIO Weekend 1.6 16V	178 B3 000	4265699	7.0	13.03	42.5	F	G
8197.605	IN-EX	PANDA (141A_), 1000 4x4	141 C2.000/156 A2.246	46515713	7.0	13.03	40.0	F	S06
8197.605	IN-EX	PANDA (141A_), 1000 4x4	141 C2.000/156 A2.246	7765039	7.0	13.03	40.0	F	S06
8197.605	IN-EX	PANDA (141A_), 1000 i.e. KAT	141 C2.000/156 A2.246	46515713	7.0	13.03	40.0	F	S06
8197.605	IN-EX	PANDA (141A_), 1000 i.e. KAT	141 C2.000/156 A2.246	7765039	7.0	13.03	40.0	F	S06
8197.605	IN-EX	PANDA (141A_), 1100	187 A1.000/176 B2.000	46515713	7.0	13.03	40.0	F	S06
8197.605	IN-EX	PANDA (141A_), 1100	187 A1.000/176 B2.000	7765039	7.0	13.03	40.0	F	S06
8197.605	IN-EX	PANDA (141A_), 1100 4x4	176 B2.000	46515713	7.0	13.03	40.0	F	S06

(D1) Internal diameter, (D2) External diameter, (B) Shape, (C) Material

VALVE GUIDES

IVT Ref.	Type	Model	Engine	OEM Ref.	D1	D2	Length	B	C
FIAT									
8197.605	IN-EX	PANDA (141A_), 1100 4x4	176 B2.000	7765039	7.0	13.03	40.0	F	S06
8197.605	IN-EX	PANDA (169), 1.1	187 A1.000	46515713	7.0	13.03	40.0	F	S06
8197.605	IN-EX	PANDA (169), 1.1	187 A1.000	7765039	7.0	13.03	40.0	F	S06
8197.605	IN-EX	PANDA (169), 1.2	188 A4.000	46515713	7.0	13.03	40.0	F	S06
8197.605	IN-EX	PANDA (169), 1.2	188 A4.000	7765039	7.0	13.03	40.0	F	S06
8197.605	IN-EX	PANDA (169), 1.2 4x4	188 A4.000	46515713	7.0	13.03	40.0	F	S06
8197.605	IN-EX	PANDA (169), 1.2 4x4	188 A4.000	7765039	7.0	13.03	40.0	F	S06
8003.104	IN-EX	Panda 0.9	312 A2.000	71769214	5.0	9.06	40.5	A	S03
8003.104	IN-EX	Panda 0.9	312 A2.000	71769215	5.0	9.06	40.5	A	S03
8003.104	IN-EX	Panda 0.9 4x4	312 A2.000	71769214	5.0	9.06	40.5	A	S03
8003.104	IN-EX	Panda 0.9 4x4	312 A2.000	71769215	5.0	9.06	40.5	A	S03
8003.104	IN-EX	Panda 0.9 Natural Power	312 A2.000	71769214	5.0	9.06	40.5	A	S03
8003.104	IN-EX	Panda 0.9 Natural Power	312 A2.000	71769215	5.0	9.06	40.5	A	S03
8008.605	IN-EX	Panda 1.2	169 A4.000	55190559	5.0	10.03	44.0	F	S06
8008.605	IN-EX	Panda 1.2	169 A4.000	55190561	5.0	10.03	44.0	F	S06
8008.605	IN-EX	Panda 1.2 4x4	169 A4.000	55190559	5.0	10.03	44.0	F	S06
8008.605	IN-EX	Panda 1.2 4x4	169 A4.000	55190561	5.0	10.03	44.0	F	S06
8008.605	IN-EX	Panda 1.2 LPG	169 A4.000	55190559	5.0	10.03	44.0	F	S06
8008.605	IN-EX	Panda 1.2 LPG	169 A4.000	55190561	5.0	10.03	44.0	F	S06
8008.605	IN-EX	Panda 1.4 Bi-Power Natural Powe	350 A1.000	55190559	5.0	10.03	44.0	F	S06
8008.605	IN-EX	Panda 1.4 Bi-Power Natural Powe	350 A1.000	55190561	5.0	10.03	44.0	F	S06
8008.605	IN-EX	Panda 1.4 Natural Power	350 A1.000	55190559	5.0	10.03	44.0	F	S06
8008.605	IN-EX	Panda 1.4 Natural Power	350 A1.000	55190561	5.0	10.03	44.0	F	S06
8197.605	IN-EX	PANDA Van (141_), 1000 i.e	156 A2.246	46515713	7.0	13.03	40.0	F	S06
8197.605	IN-EX	PANDA Van (141_), 1000 i.e	156 A2.246	7765039	7.0	13.03	40.0	F	S06
8197.605	IN-EX	PANDA Van (169), 1.1	187 A1.000	46515713	7.0	13.03	40.0	F	S06
8197.605	IN-EX	PANDA Van (169), 1.1	187 A1.000	7765039	7.0	13.03	40.0	F	S06
8197.605	IN-EX	PANDA Van (169), 1.2	188 A4.000	46515713	7.0	13.03	40.0	F	S06
8197.605	IN-EX	PANDA Van (169), 1.2	188 A4.000	7765039	7.0	13.03	40.0	F	S06
8197.605	IN-EX	PANDA Van (169), 1.2 4x4	188 A4.000	46515713	7.0	13.03	40.0	F	S06
8197.605	IN-EX	PANDA Van (169), 1.2 4x4	188 A4.000	7765039	7.0	13.03	40.0	F	S06
8008.605	IN-EX	Panda Van 1.4 Natural Power	350 A1.000	55190559	5.0	10.03	44.0	F	S06
8008.605	IN-EX	Panda Van 1.4 Natural Power	350 A1.000	55190561	5.0	10.03	44.0	F	S06
8197.605	IN-EX	PUNTO (176), 75 1.2	176 A8.000	46515713	7.0	13.03	40.0	F	S06
8197.605	IN-EX	PUNTO (176), 75 1.2	176 A8.000	7765039	7.0	13.03	40.0	F	S06
8140.600	IN-EX	PUNTO (176_), 1.2 16V	176 B9.000	46441525	6.0	10.03	39.7	F	G1
8146.600	IN-EX	PUNTO (176_), 1.4 GT Turbo	176 A4.000		8.0	14.06	46.5	F	G
8146.600	IN-EX	PUNTO (176_), 1.4 GT Turbo	176 B6.000		8.0	14.06	46.5	F	G
8146.600	IN-EX	PUNTO (176_), 1.6	176 A9.000		8.0	14.06	46.5	F	G
8197.605	IN-EX	PUNTO (188), 1.2 60 (188.030, .0	188 A4.000	46515713	7.0	13.03	40.0	F	S06
8197.605	IN-EX	PUNTO (188), 1.2 60 (188.030, .0	188 A4.000	7765039	7.0	13.03	40.0	F	S06
8197.605	IN-EX	PUNTO (188), 1.2 Natural Power	188 A4.000	46515713	7.0	13.03	40.0	F	S06
8197.605	IN-EX	PUNTO (188), 1.2 Natural Power	188 A4.000	7765039	7.0	13.03	40.0	F	S06
8003.104	IN-EX	Punto 0.9 Bi-Fuel	312 A2.000	71769214	5.0	9.06	40.5	A	S03
8003.104	IN-EX	Punto 0.9 Bi-Fuel	312 A2.000	71769215	5.0	9.06	40.5	A	S03
8003.104	IN-EX	Punto 0.9 Twinair Turbo	312 A2.000	71769214	5.0	9.06	40.5	A	S03
8003.104	IN-EX	Punto 0.9 Twinair Turbo	312 A2.000	71769215	5.0	9.06	40.5	A	S03
8008.605	IN-EX	Punto 1.2	169 A4.000	55190559	5.0	10.03	44.0	F	S06
8008.605	IN-EX	Punto 1.2	169 A4.000	55190561	5.0	10.03	44.0	F	S06
8000.605	IN-EX	Punto 1.2 16V 80	188 A5.000	46441525	6.0	10.03	39.7	F	S06
8008.605	IN-EX	Punto 1.4	199 A7.000	55190559	5.0	10.03	44.0	F	S06
8008.605	IN-EX	Punto 1.4	199 A7.000	55190561	5.0	10.03	44.0	F	S06
8008.605	IN-EX	Punto 1.4	350 A1.000	55190559	5.0	10.03	44.0	F	S06
8008.605	IN-EX	Punto 1.4	350 A1.000	55190561	5.0	10.03	44.0	F	S06
8000.605	IN-EX	Punto 1.4	843 A1.000	46441525	6.0	10.03	39.7	F	S06
8008.605	IN-EX	Punto 1.4 Bi-Fuel	350 A1.000	55190559	5.0	10.03	44.0	F	S06
8008.605	IN-EX	Punto 1.4 Bi-Fuel	350 A1.000	55190561	5.0	10.03	44.0	F	S06
8000.605	IN-EX	Punto 1.4 Multi Air	955 A6.000	46441525	6.0	10.03	39.7	F	S06
8008.605	IN-EX	Punto 1.4 Natural Power	350 A1.000	55190559	5.0	10.03	44.0	F	S06
8008.605	IN-EX	Punto 1.4 Natural Power	350 A1.000	55190561	5.0	10.03	44.0	F	S06
8000.605	IN-EX	Punto 1.4 Turbo Multi Air	955 A2.000	46441525	6.0	10.03	39.7	F	S06
8102.600	IN	Punto 1.8 130 HGT	183 A1.000	60811087	7.0	13.03	42.5	F	G1

(D1) Internal diameter, (D2) External diameter, (B) Shape, (C) Material

VALVE GUIDES

FIAT

IVT Ref.	Type	Model	Engine	OEM Ref.	D1	D2	Length	B	C
8105.600	EX	Punto 1.8 130 HGT	183 A1.000	60811090	7.0	13.03	46.0	F	G1
8105.600	EX	Punto 1.8 130 HGT	183 A1.000	60811091	7.0	13.03	46.0	F	G1
8102.600	IN	Punto 1.8 130 HGT	183 A1.000	7756897	7.0	13.03	42.5	F	G1
8102.600	IN	Punto 1.8 130 HGT	183 A1.000	7757053	7.0	13.03	42.5	F	G1
8105.600	EX	Punto 1.8 130 HGT	183 A1.000	7779402	7.0	13.03	46.0	F	G1
8102.600	IN	Punto 1.8 130 HGT	188 A6.000	60811087	7.0	13.03	42.5	F	G1
8105.600	EX	Punto 1.8 130 HGT	188 A6.000	60811090	7.0	13.03	46.0	F	G1
8105.600	EX	Punto 1.8 130 HGT	188 A6.000	60811091	7.0	13.03	46.0	F	G1
8102.600	IN	Punto 1.8 130 HGT	188 A6.000	7756897	7.0	13.03	42.5	F	G1
8102.600	IN	Punto 1.8 130 HGT	188 A6.000	7757053	7.0	13.03	42.5	F	G1
8105.600	EX	Punto 1.8 130 HGT	188 A6.000	7779402	7.0	13.03	46.0	F	G1
8140.600	IN-EX	PUNTO Cabriolet (176_), 85 16V	176 B9.000	46441525	6.0	10.03	39.7	F	G1
8146.600	IN-EX	PUNTO Cabriolet (176_), 90 1.6	176 A9.000		8.0	14.06	46.5	F	G
8008.605	IN-EX	Punto EVO 1.2	199 A4.000	55190559	5.0	10.03	44.0	F	S06
8008.605	IN-EX	Punto EVO 1.2	199 A4.000	55190561	5.0	10.03	44.0	F	S06
8008.605	IN-EX	Punto EVO 1.4	350 A1.000	55190559	5.0	10.03	44.0	F	S06
8008.605	IN-EX	Punto EVO 1.4	350 A1.000	55190561	5.0	10.03	44.0	F	S06
8000.605	IN-EX	Punto Evo 1.4 16V	955 A2.000	46441525	6.0	10.03	39.7	F	S06
8000.605	IN-EX	Punto Evo 1.4 16V	955 A6.000	46441525	6.0	10.03	39.7	F	S06
8000.605	IN-EX	Punto Evo 1.4 Abarth	199 A8.000	46441525	6.0	10.03	39.7	F	S06
8000.605	IN-EX	Punto Evo 1.4 Abarth	955 A8.000	46441525	6.0	10.03	39.7	F	S06
8008.605	IN-EX	Punto EVO 1.4 LPG	350 A1.000	55190559	5.0	10.03	44.0	F	S06
8008.605	IN-EX	Punto EVO 1.4 LPG	350 A1.000	55190561	5.0	10.03	44.0	F	S06
8008.605	IN-EX	Punto EVO 1.4 Natural Gas	350 A1.000	55190559	5.0	10.03	44.0	F	S06
8008.605	IN-EX	Punto EVO 1.4 Natural Gas	350 A1.000	55190561	5.0	10.03	44.0	F	S06
8197.605	IN-EX	PUNTO Van (176L), 1.1	176 B2.000	46515713	7.0	13.03	40.0	F	S06
8197.605	IN-EX	PUNTO Van (176L), 1.1	176 B2.000	7765039	7.0	13.03	40.0	F	S06
8197.605	IN-EX	PUNTO Van (188AX), 1.2 60	188 A4.000	46515713	7.0	13.03	40.0	F	S06
8197.605	IN-EX	PUNTO Van (188AX), 1.2 60	188 A4.000	7765039	7.0	13.03	40.0	F	S06
8008.605	IN-EX	Punto/Grande Punto 1.2	199 A4.000	55190559	5.0	10.03	44.0	F	S06
8008.605	IN-EX	Punto/Grande Punto 1.2	199 A4.000	55190561	5.0	10.03	44.0	F	S06
8008.605	IN-EX	Punto/Grande Punto 1.4	199 A7.000	55190559	5.0	10.03	44.0	F	S06
8008.605	IN-EX	Punto/Grande Punto 1.4	199 A7.000	55190561	5.0	10.03	44.0	F	S06
8008.605	IN-EX	Punto/Grande Punto 1.4	350 A1.000	55190559	5.0	10.03	44.0	F	S06
8008.605	IN-EX	Punto/Grande Punto 1.4	350 A1.000	55190561	5.0	10.03	44.0	F	S06
8000.605	IN-EX	Punto/Grande Punto 1.4 16V	199 A6.000	46441525	6.0	10.03	39.7	F	S06
8000.605	IN-EX	Punto/Grande Punto 1.4 Abarth	199 A8.000	46441525	6.0	10.03	39.7	F	S06
8000.605	IN-EX	Punto/Grande Punto 1.4 Abarth	955 A8.000	46441525	6.0	10.03	39.7	F	S06
8008.605	IN-EX	Punto/Grande Punto 1.4 LPG	350 A1.000	55190559	5.0	10.03	44.0	F	S06
8008.605	IN-EX	Punto/Grande Punto 1.4 LPG	350 A1.000	55190561	5.0	10.03	44.0	F	S06
8008.605	IN-EX	Punto/Grande Punto 1.4 Natural P	350 A1.000	55190559	5.0	10.03	44.0	F	S06
8008.605	IN-EX	Punto/Grande Punto 1.4 Natural P	350 A1.000	55190561	5.0	10.03	44.0	F	S06
8000.605	IN-EX	Punto/Grande Punto 1.4 T-Jet	198 A4.000	46441525	6.0	10.03	39.7	F	S06
8159.601	IN-EX	QUBO (225), 1.4	KFT/KFV	9456069680	7.0	13.06	47.6	F	B
8008.605	IN-EX	Qubo 1.4 Natural Power	350 A1.000	55190559	5.0	10.03	44.0	F	S06
8008.605	IN-EX	Qubo 1.4 Natural Power	350 A1.000	55190561	5.0	10.03	44.0	F	S06
8146.600	IN-EX	REGATA (138_), 100 Super 1.6	149 A2.000/149 A4.000		8.0	14.06	46.5	F	G
8146.600	IN-EX	REGATA (138_), 100 Super 1.6	149 C3.000		8.0	14.06	46.5	F	G
8146.600	IN-EX	REGATA (138_), 60 Diesel 1.7	149 B3.000		8.0	14.06	46.5	F	G
8146.600	IN-EX	REGATA (138_), 70 1.3	138 B2.000		8.0	14.06	46.5	F	G
8146.600	IN-EX	REGATA (138_), 70 1.3	149 A3.000/149 A7.000		8.0	14.06	46.5	F	G
8146.600	IN-EX	REGATA (138_), 75 1.5	138 C3.048/149 C1.000/138		8.0	14.06	46.5	F	G
8146.600	IN-EX	REGATA (138_), 75 i.e. 1.5	149 C1.000/138 C2.048		8.0	14.06	46.5	F	G
8146.600	IN-EX	REGATA (138_), 80 Turbo Diesel	831 D1.000		8.0	14.06	46.5	F	G
8146.600	IN-EX	REGATA (138_), 85 1.5	149 A5.000		8.0	14.06	46.5	F	G
8146.600	IN-EX	REGATA (138_), 85 1.6	149 A.000		8.0	14.06	46.5	F	G
8146.600	IN-EX	REGATA Weekend (138_), 100 1	149 C3.000/149 A4.000		8.0	14.06	46.5	F	G
8146.600	IN-EX	REGATA Weekend (138_), 100 i.e	149 C3.000		8.0	14.06	46.5	F	G
8146.600	IN-EX	REGATA Weekend (138_), 60 Die	149 B3.000		8.0	14.06	46.5	F	G
8146.600	IN-EX	REGATA Weekend (138_), 75 1.5	138 C2.048		8.0	14.06	46.5	F	G
8146.600	IN-EX	REGATA Weekend (138_), 80 Tur	831 D1.000		8.0	14.06	46.5	F	G
8146.600	IN-EX	RITMO Cabriolet (138_), 100 1.6	138 AR.000		8.0	14.06	46.5	F	G

(D1) Internal diameter, (D2) External diameter, (B) Shape, (C) Material

VALVE GUIDES

FIAT

IVT Ref.	Type	Model	Engine	OEM Ref.	D1	D2	Length	B	C
8146.600	IN-EX	RITMO Cabriolet (138_), 100 1.6	138 AR.048		8.0	14.06	46.5	F	G
8146.600	IN-EX	RITMO Cabriolet (138_), 50 1.3	138 B2.000		8.0	14.06	46.5	F	G
8146.600	IN-EX	RITMO Cabriolet (138_), 85 1.5	138 A4.000		8.0	14.06	46.5	F	G
8146.600	IN-EX	RITMO Cabriolet (138_), 85 1.5	138 B3.000		8.0	14.06	46.5	F	G
8146.600	IN-EX	RITMO I (138_), 105 Sport 1.6	138 AR.000		8.0	14.06	46.5	F	G
8146.600	IN-EX	RITMO I (138_), 65 1.3	138 A1.000		8.0	14.06	46.5	F	G
8146.600	IN-EX	RITMO I (138_), 70 1.3	149 A3.000/149 A7.000		8.0	14.06	46.5	F	G
8146.600	IN-EX	RITMO I (138_), 75 1.3	138 A3.000		8.0	14.06	46.5	F	G
8146.600	IN-EX	RITMO I (138_), 75 1.5	138 A2.000		8.0	14.06	46.5	F	G
8146.600	IN-EX	RITMO I (138_), 75 i.e. 1.5	138 C3.048/149 C1.000/138		8.0	14.06	46.5	F	G
8146.600	IN-EX	RITMO I (138_), 85 1.5	138 A4.000		8.0	14.06	46.5	F	G
8146.600	IN-EX	RITMO II (138_), 100 1.6	149 A4.000		8.0	14.06	46.5	F	G
8146.600	IN-EX	RITMO II (138_), 105 1.6	138 AR.000		8.0	14.06	46.5	F	G
8146.600	IN-EX	RITMO II (138_), 60 Diesel 1.7	149 B3.000/138 C.000		8.0	14.06	46.5	F	G
8146.600	IN-EX	RITMO II (138_), 70 1.3	138 B2.000		8.0	14.06	46.5	F	G
8146.600	IN-EX	RITMO II (138_), 75 1.5	138 A2.000/138 C2.048		8.0	14.06	46.5	F	G
8146.600	IN-EX	RITMO II (138_), 75 1.5	149 C1.000/138 A2.000/138		8.0	14.06	46.5	F	G
8146.600	IN-EX	RITMO II (138_), 80 Turbo Diesel	831 D1.000		8.0	14.06	46.5	F	G
8146.600	IN-EX	RITMO II (138_), 85 1.5	138 B3.000		8.0	14.06	46.5	F	G
8146.600	IN-EX	RITMO II (138_), 85 1.5	149 A5.000		8.0	14.06	46.5	F	G
8146.600	IN-EX	RITMO II (138_), 90 1.6 i.e.	138 AR.000		8.0	14.06	46.5	F	G
8165.104	IN-EX	SCUDO (272, 270), 1.6 D Multijet	9HU	0220A6	5.5	9.55	34.0	A	S03
8127.905	IN-EX	SCUDO Combinato (220_), 2.0 16	RFN (EW10J4)	022124	6.0	12.06	40.8	P	S06
8178.601	IN-EX	SCUDO Combinato (220P), 1.9 D	DHX (XUD9TF/L)	9456028380	8.0	14.05	48.0	F	B
8178.601	IN-EX	SCUDO Combinato (220P), 1.9 D	DHX (XUD9TF/L)	9456028480	8.0	14.05	48.0	F	B
8178.601	IN-EX	SCUDO Combinato (220P), 1.9 T	D9B	9456028380	8.0	14.05	48.0	F	B
8178.601	IN-EX	SCUDO Combinato (220P), 1.9 T	D9B	9456028480	8.0	14.05	48.0	F	B
8178.601	IN-EX	SCUDO Combinato (220P), 1.9 T	D8B	9456028380	8.0	14.05	48.0	F	B
8178.601	IN-EX	SCUDO Combinato (220P), 1.9 T	D8B	9456028480	8.0	14.05	48.0	F	B
8127.905	IN-EX	SCUDO Kasten (220_), 2.0	RFN (EW10J4)	022124	6.0	12.06	40.8	P	S06
8178.601	IN-EX	SCUDO Kasten (220L), 1.9 D	DHX (XUD9TF/L)	9456028380	8.0	14.05	48.0	F	B
8178.601	IN-EX	SCUDO Kasten (220L), 1.9 D	DHX (XUD9TF/L)	9456028480	8.0	14.05	48.0	F	B
8178.601	IN-EX	SCUDO Kasten (220L), 1.9 TD	D8B	9456028380	8.0	14.05	48.0	F	B
8178.601	IN-EX	SCUDO Kasten (220L), 1.9 TD	D8B	9456028480	8.0	14.05	48.0	F	B
8178.601	IN-EX	SCUDO Kasten (220L), 1.9 TD	DHX (XUD9TF/L)	9456028380	8.0	14.05	48.0	F	B
8178.601	IN-EX	SCUDO Kasten (220L), 1.9 TD	DHX (XUD9TF/L)	9456028480	8.0	14.05	48.0	F	B
8165.104	IN-EX	SCUDO Kasten (272, 270), 1.6 D	9HU	0220A6	5.5	9.55	34.0	A	S03
8165.104	IN-EX	SCUDO Pritsche/Fahrgestell (272,	9HU	0220A6	5.5	9.55	34.0	A	S03
8187.905	IN-EX	SEDICI, 1.6 16V	M16A	1111554G00	5.5	10.6	40.0	P-6	S03
8187.905	IN-EX	SEDICI, 1.6 16V 4x4	M16A	1111554G00	5.5	10.6	40.0	P-6	S03
8197.605	IN-EX	SEICENTO (187), 1.1 (187AXB, 1	187 A1.000/176 B2.000	46515713	7.0	13.03	40.0	F	S06
8197.605	IN-EX	SEICENTO (187), 1.1 (187AXB, 1	187 A1.000/176 B2.000	7765039	7.0	13.03	40.0	F	S06
8197.605	IN-EX	SIENA (178_), 1.2	178 B5.000	46515713	7.0	13.03	40.0	F	S06
8197.605	IN-EX	SIENA (178_), 1.2	178 B5.000	7765039	7.0	13.03	40.0	F	S06
8186.105	IN-EX	STILO (192), 1.9 D Multijet	937 A5.000	55210016	5.0	10.03	46.7	A	S06
8187.905	IN-EX	STILO (192), 1.9 JTD (192_XE1A)	192 A1.000/937 A7.000	1111554G00	5.5	10.6	40.0	P-6	S03
8140.600	IN-EX	STILO (192_), 1.4 16V	192 B2.000	46441525	6.0	10.03	39.7	F	G1
8000.605	IN-EX	Stilo 1.2 16V	188 A5.000	46441525	6.0	10.03	39.7	F	S06
8000.605	IN-EX	Stilo 1.4 16V	192 B2.000	46441525	6.0	10.03	39.7	F	S06
8000.605	IN-EX	Stilo 1.4 16V	843 A1.000	46441525	6.0	10.03	39.7	F	S06
8102.600	IN	Stilo 2.4 20V	192 A2.000	60811087	7.0	13.03	42.5	F	G1
8105.600	EX	Stilo 2.4 20V	192 A2.000	60811090	7.0	13.03	46.0	F	G1
8105.600	EX	Stilo 2.4 20V	192 A2.000	60811091	7.0	13.03	46.0	F	G1
8102.600	IN	Stilo 2.4 20V	192 A2.000	7756897	7.0	13.03	42.5	F	G1
8102.600	IN	Stilo 2.4 20V	192 A2.000	7757053	7.0	13.03	42.5	F	G1
8105.600	EX	Stilo 2.4 20V	192 A2.000	7779402	7.0	13.03	46.0	F	G1
8186.105	IN-EX	STILO Multi Wagon (192), 1.9 D M	937 A5.000	55210016	5.0	10.03	46.7	A	S06
8140.600	IN-EX	STILO Multi Wagon (192_), 1.4 16	192 B2.000	46441525	6.0	10.03	39.7	F	G1
8000.605	IN-EX	Stilo Multi Wagon 1.4 16V	192 B2.000	46441525	6.0	10.03	39.7	F	S06
8000.605	IN-EX	Stilo Multi Wagon 1.4 16V	843 A1.000	46441525	6.0	10.03	39.7	F	S06
8197.605	IN-EX	STRADA Pick-up (178E), 1.2	178 B5.000	46515713	7.0	13.03	40.0	F	S06
8197.605	IN-EX	STRADA Pick-up (178E), 1.2	178 B5.000	7765039	7.0	13.03	40.0	F	S06

(D1) Internal diameter, (D2) External diameter, (B) Shape, (C) Material

VALVE GUIDES

IVT Ref.	Type	Model	Engine	OEM Ref.	D1	D2	Length	B	C
FIAT									
8197.605	IN-EX	STRADA Pick-up (178E), 1.2	188 A4.000	46515713	7.0	13.03	40.0	F	S06
8197.605	IN-EX	STRADA Pick-up (178E), 1.2	188 A4.000	7765039	7.0	13.03	40.0	F	S06
8146.600	IN-EX	TEMPRA (159_), 1.4 i.e. (159.AC,	836 A4.000/160 A1.046		8.0	14.06	46.5	F	G
8146.600	IN-EX	TEMPRA (159_), 1.6	159 B9.000/159 A3.000		8.0	14.06	46.5	F	G
8146.600	IN-EX	TEMPRA (159_), 1.6 i.e. (159.AE)	159 A3.046		8.0	14.06	46.5	F	G
8146.600	IN-EX	TEMPRA (159_), 1.6 i.e. (159.AJ)	159 B9.000		8.0	14.06	46.5	F	G
8146.600	IN-EX	TEMPRA S.W. (159_), 1.4 i.e. (15	836 A4.000/160 A1.046		8.0	14.06	46.5	F	G
8146.600	IN-EX	TEMPRA S.W. (159_), 1.6	159 A3.000		8.0	14.06	46.5	F	G
8146.600	IN-EX	TEMPRA S.W. (159_), 1.6 i.e. (15	159 A3.046/835 C1.000		8.0	14.06	46.5	F	G
8146.600	IN-EX	TEMPRA S.W. (159_), 1.6 i.e. (15	159 B9.000		8.0	14.06	46.5	F	G
8146.600	IN-EX	TIPO (160_), 1.4 (160.AC)	160 A1.000/160 A1.048		8.0	14.06	46.5	F	G
8146.600	IN-EX	TIPO (160_), 1.4 i.e.	159 A2.000		8.0	14.06	46.5	F	G
8146.600	IN-EX	TIPO (160_), 1.4 i.e. (160.AP, 160	836 A4.000/160 A1.046		8.0	14.06	46.5	F	G
8146.600	IN-EX	TIPO (160_), 1.6 (160.AE)	160 A2.000		8.0	14.06	46.5	F	G
8146.600	IN-EX	TIPO (160_), 1.6 i.e. (160.A1, 160.	159 A3.048/835 C1.000		8.0	14.06	46.5	F	G
8146.600	IN-EX	TIPO (160_), 1.6 i.e. (160.AF)	159 A3.046		8.0	14.06	46.5	F	G
8146.600	IN-EX	TIPO (160_), 1.7 D (160.AG)	149 B4.000		8.0	14.06	46.5	F	G
8127.905	IN-EX	ULYSSE (179_), 2.0	RFN (EW10J4)	022124	6.0	12.06	40.8	P	S06
8178.601	IN-EX	ULYSSE (220), 1.9 TD (220AH5)	DHX (XUD9TF/L)	9456028380	8.0	14.05	48.0	F	B
8178.601	IN-EX	ULYSSE (220), 1.9 TD (220AH5)	DHX (XUD9TF/L)	9456028480	8.0	14.05	48.0	F	B
8134.601	IN-EX	ULYSSE (220_), 1.8 (220.BB5)	LFW	9456001309	8.0	13.07	45.0	F	B
8127.905	IN-EX	ULYSSE (220_), 2.0 16V	RFN (EW10J4)	022124	6.0	12.06	40.8	P	S06
8154.601	IN-EX	ULYSSE (220_), 2.0 16V	RFV	022119	7.0	12.07	40.0	F	B
8127.905	IN-EX	ULYSSE (220_), 2.0 16V	RFV	022124	6.0	12.06	40.8	P	S06
8006.105	IN-EX	Ulysse 2.2 D Multijet	4HT (DW12BTED4)	0220A2	6.0	10.06	41.5	A	S06
8006.105	IN-EX	Ulysse 2.2 D Multijet	4HT (DW12BTED4)	0220A2	6.0	10.06	41.5	A	S06
8006.105	IN-EX	Ulysse 2.2 D Multijet	4HT (DW12BTED4)	9640340380	6.0	10.06	41.5	A	S06
8006.105	IN-EX	Ulysse 2.2 D Multijet	4HT (DW12BTED4)	9640340380	6.0	10.06	41.5	A	S06
8146.600	IN-EX	UNO (146_), 55 1.1	138 B.000		8.0	14.06	46.5	F	G
8146.600	IN-EX	UNO (146_), 60 Diesel 1.7	146 B2.000		8.0	14.06	46.5	F	G
8146.600	IN-EX	UNO (146_), 60 Diesel 1.7	149 B3.000		8.0	14.06	46.5	F	G
8146.600	IN-EX	UNO (146_), 70 1.3	138 B2.000		8.0	14.06	46.5	F	G
8146.600	IN-EX	UNO (146_), 70 1.3	149 A7.000		8.0	14.06	46.5	F	G
8146.600	IN-EX	UNO (146_), 70 i.e. 1.4	160 A1.046		8.0	14.06	46.5	F	G
8146.600	IN-EX	UNO (146_), 70 S 1.4	160 A1.048		8.0	14.06	46.5	F	G
8146.600	IN-EX	UNO (146_), 70 TD 1.4	146 B.000/146 B3.000		8.0	14.06	46.5	F	G
8146.600	IN-EX	UNO (146_), 75 i.e. 1.5	149 C1.000/138 C2.048		8.0	14.06	46.5	F	G
8146.600	IN-EX	X 1/9 (128_), 1.5	138 AS.000		8.0	14.06	46.5	F	G
8146.600	IN-EX	X 1/9 (128_), 1.5	138 BS.031		8.0	14.06	46.5	F	G
FORD									
8165.104	IN-EX	C-MAX (DM2), 1.6 TDCi	G8DA/G8DB/G8DD	0220A6	5.5	9.55	34.0	A	S03
8165.104	IN-EX	C-MAX (DM2), 1.6 TDCi	G8DC/MTDA	0220A6	5.5	9.55	34.0	A	S03
8165.104	IN-EX	C-MAX (DM2), 1.6 TDCi	HHDA/HHDB/GPDA	0220A6	5.5	9.55	34.0	A	S03
8129.104	IN-EX	C-MAX (DM2), 1.8	QQDA/QQDB	LFY110281	5.5	11.05	39.0	A	S03
8129.104	IN-EX	C-MAX (DM2), 1.8 Flexifuel	Q7DA	LFY110281	5.5	11.05	39.0	A	S03
8165.104	IN-EX	C-MAX II (DXA/CB7, DXA/CEU),	T1DB/T1DA	0220A6	5.5	9.55	34.0	A	S03
8165.104	IN-EX	C-MAX II (DXA/CB7, DXA/CEU),	T3DA/T3DB	0220A6	5.5	9.55	34.0	A	S03
8166.100	IN-EX	COUGAR (EC_), 2.0 16V	EDBB/EDBC/EDBD/EDBA		6.1	12.03	36.0	A	G1
8149.600	IN-EX	ESCORT '81 Express (AVA), 1.1	GLB		7.9	12.75	54.0	F	G
8212.600	IN-EX	ESCORT '81 Express (AVA), 1.3	JPA	81SM6510LC	8.1	13.56	65.0	F	G
8212.600	IN-EX	ESCORT '86 Express (AVF), 1.3	JLA/JBB/JLB	81SM6510LC	8.1	13.56	65.0	F	G
8212.600	IN-EX	ESCORT '91 Express (AVL), 1.4	F6F/F6G	81SM6510LC	8.1	13.56	65.0	F	G
8166.100	IN-EX	ESCORT CLASSIC (AAL, ABL), 1	L1E		6.1	12.03	36.0	A	G1
8166.100	IN-EX	ESCORT CLASSIC Turnier (ANL),	L1E		6.1	12.03	36.0	A	G1
8149.600	IN-EX	ESCORT II Kombi, 1.1	G1		7.9	12.75	54.0	F	G
8149.600	IN-EX	ESCORT II Kombi, 1.1	G2		7.9	12.75	54.0	F	G
8212.600	IN-EX	ESCORT III (GAA), 1.1	GMA/GLB	81SM6510LC	8.1	13.56	65.0	F	G
8212.600	IN-EX	ESCORT III (GAA), 1.1	GPA	81SM6510LC	8.1	13.56	65.0	F	G
8149.600	IN-EX	ESCORT III (GAA), 1.1	GSE		7.9	12.75	54.0	F	G
8212.600	IN-EX	ESCORT III (GAA), 1.3	JPA	81SM6510LC	8.1	13.56	65.0	F	G
8212.600	IN-EX	ESCORT III (GAA), 1.6	LP1/LPA	81SM6510LC	8.1	13.56	65.0	F	G

(D1) Internal diameter, (D2) External diameter, (B) Shape, (C) Material

VALVE GUIDES

IVT Ref.	Type	Model	Engine	OEM Ref.	D1	D2	Length	B	C
FORD									
8212.600	IN-EX	ESCORT III (GAA), 1.6	LUA	81SM6510LC	8.1	13.56	65.0	F	G
8212.600	IN-EX	ESCORT III (GAA), 1.6 i (GAA)	L4B	81SM6510LC	8.1	13.56	65.0	F	G
8212.600	IN-EX	ESCORT III (GAA), 1.6 RS Turbo	LNA	81SM6510LC	8.1	13.56	65.0	F	G
8212.600	IN-EX	ESCORT III Cabriolet (ALD), 1.3	JPA	81SM6510LC	8.1	13.56	65.0	F	G
8212.600	IN-EX	ESCORT III Cabriolet (ALD), 1.6	LP1/LPA	81SM6510LC	8.1	13.56	65.0	F	G
8212.600	IN-EX	ESCORT III Cabriolet (ALD), 1.6 i	LRA/LR1	81SM6510LC	8.1	13.56	65.0	F	G
8212.600	IN-EX	ESCORT III Kombi (AWA), 1.1	GMA/GLB	81SM6510LC	8.1	13.56	65.0	F	G
8149.600	IN-EX	ESCORT III Kombi (AWA), 1.1	GSE		7.9	12.75	54.0	F	G
8212.600	IN-EX	ESCORT III Kombi (AWA), 1.3	JPA	81SM6510LC	8.1	13.56	65.0	F	G
8212.600	IN-EX	ESCORT III Kombi (AWA), 1.6	LP1/LPA	81SM6510LC	8.1	13.56	65.0	F	G
8149.600	IN-EX	ESCORT IV (GAF, AWF, ABFT),	GSG		7.9	12.75	54.0	F	G
8212.600	IN-EX	ESCORT IV (GAF, AWF, ABFT),	JLA/JBB/JLB	81SM6510LC	8.1	13.56	65.0	F	G
8212.600	IN-EX	ESCORT IV (GAF, AWF, ABFT),	F6D/F6B/FUC	81SM6510LC	8.1	13.56	65.0	F	G
8212.600	IN-EX	ESCORT IV (GAF, AWF, ABFT),	FUA	81SM6510LC	8.1	13.56	65.0	F	G
8212.600	IN-EX	ESCORT IV (GAF, AWF, ABFT),	LP2	81SM6510LC	8.1	13.56	65.0	F	G
8212.600	IN-EX	ESCORT IV (GAF, AWF, ABFT),	LUG	81SM6510LC	8.1	13.56	65.0	F	G
8212.600	IN-EX	ESCORT IV (GAF, AWF, ABFT),	L4B	81SM6510LC	8.1	13.56	65.0	F	G
8212.600	IN-EX	ESCORT IV (GAF, AWF, ABFT),	LJB	81SM6510LC	8.1	13.56	65.0	F	G
8212.600	IN-EX	ESCORT IV (GAF, AWF, ABFT),	LNB	81SM6510LC	8.1	13.56	65.0	F	G
8212.600	IN-EX	ESCORT IV (GAF, AWF, ABFT),	LRB/LR2	81SM6510LC	8.1	13.56	65.0	F	G
8212.600	IN-EX	ESCORT IV Cabriolet (ALF), 1.4	F6D/F6B/FUC	81SM6510LC	8.1	13.56	65.0	F	G
8212.600	IN-EX	ESCORT IV Cabriolet (ALF), 1.4	FUA	81SM6510LC	8.1	13.56	65.0	F	G
8212.600	IN-EX	ESCORT IV Cabriolet (ALF), 1.6	LP2/LPA	81SM6510LC	8.1	13.56	65.0	F	G
8212.600	IN-EX	ESCORT IV Cabriolet (ALF), 1.6 i	L4B	81SM6510LC	8.1	13.56	65.0	F	G
8212.600	IN-EX	ESCORT IV Cabriolet (ALF), 1.6 i	LJB	81SM6510LC	8.1	13.56	65.0	F	G
8212.600	IN-EX	ESCORT IV Cabriolet (ALF), 1.6 X	LRB/LR2	81SM6510LC	8.1	13.56	65.0	F	G
8212.600	IN-EX	ESCORT IV Kombi (AWF, AVF), 1	JLA/JBB/JLB	81SM6510LC	8.1	13.56	65.0	F	G
8212.600	IN-EX	ESCORT IV Kombi (AWF, AVF), 1	F6D/F6B/FUC	81SM6510LC	8.1	13.56	65.0	F	G
8212.600	IN-EX	ESCORT IV Kombi (AWF, AVF), 1	FUA	81SM6510LC	8.1	13.56	65.0	F	G
8212.600	IN-EX	ESCORT IV Kombi (AWF, AVF), 1	LP2	81SM6510LC	8.1	13.56	65.0	F	G
8212.600	IN-EX	ESCORT IV Kombi (AWF, AVF), 1	L4B	81SM6510LC	8.1	13.56	65.0	F	G
8212.600	IN-EX	ESCORT V (GAL), 1.4	F6F/F6G	81SM6510LC	8.1	13.56	65.0	F	G
8212.600	IN-EX	ESCORT V (GAL), 1.6	LJF	81SM6510LC	8.1	13.56	65.0	F	G
8212.600	IN-EX	ESCORT V (GAL), 1.6	LUJ/LUK	81SM6510LC	8.1	13.56	65.0	F	G
8166.100	IN-EX	ESCORT V (GAL), 1.8 16V XR3i	RDA		6.1	12.03	36.0	A	G1
8166.100	IN-EX	ESCORT V (GAL), 1.8 16V XR3i	RQB		6.1	12.03	36.0	A	G1
8212.600	IN-EX	ESCORT V Cabriolet (ALL), 1.4	F6F/F6G	81SM6510LC	8.1	13.56	65.0	F	G
8212.600	IN-EX	ESCORT V Cabriolet (ALL), 1.6	LJF	81SM6510LC	8.1	13.56	65.0	F	G
8166.100	IN-EX	ESCORT V Cabriolet (ALL), 1.8 1	RDA		6.1	12.03	36.0	A	G1
8166.100	IN-EX	ESCORT V Cabriolet (ALL), 1.8 1	RQB		6.1	12.03	36.0	A	G1
8212.600	IN-EX	ESCORT V Kombi (GAL, AVL), 1.	F6F/F6G	81SM6510LC	8.1	13.56	65.0	F	G
8212.600	IN-EX	ESCORT V Kombi (GAL, AVL), 1.	LJF	81SM6510LC	8.1	13.56	65.0	F	G
8212.600	IN-EX	ESCORT V Kombi (GAL, AVL), 1.	LUJ/LUK	81SM6510LC	8.1	13.56	65.0	F	G
8166.100	IN-EX	ESCORT V Kombi (GAL, AVL), 1.	RDA		6.1	12.03	36.0	A	G1
8212.600	IN-EX	ESCORT VI (GAL), 1.4	F4B/FUH	81SM6510LC	8.1	13.56	65.0	F	G
8212.600	IN-EX	ESCORT VI (GAL), 1.4	F6F/F6G	81SM6510LC	8.1	13.56	65.0	F	G
8166.100	IN-EX	ESCORT VI (GAL), 1.6 i 16V	L1E		6.1	12.03	36.0	A	G1
8166.100	IN-EX	ESCORT VI (GAL), 1.6 i 16V	L1H		6.1	12.03	36.0	A	G1
8166.100	IN-EX	ESCORT VI (GAL), 1.8 16V XR3i	RQB		6.1	12.03	36.0	A	G1
8166.100	IN-EX	ESCORT VI (GAL), 1.8 i 16V	RDA		6.1	12.03	36.0	A	G1
8166.100	IN-EX	ESCORT VI (GAL), 1.8 XR3i 16V	RDA		6.1	12.03	36.0	A	G1
8166.100	IN-EX	ESCORT VI (GAL), 1.8 XR3i 16V	RQB		6.1	12.03	36.0	A	G1
8212.600	IN-EX	ESCORT VI Cabriolet (ALL), 1.4	F6F/F6G	81SM6510LC	8.1	13.56	65.0	F	G
8212.600	IN-EX	ESCORT VI Cabriolet (ALL), 1.4 i	F4B	81SM6510LC	8.1	13.56	65.0	F	G
8166.100	IN-EX	ESCORT VI Cabriolet (ALL), 1.6 1	L1E		6.1	12.03	36.0	A	G1
8166.100	IN-EX	ESCORT VI Cabriolet (ALL), 1.6 i	L1H		6.1	12.03	36.0	A	G1
8166.100	IN-EX	ESCORT VI Cabriolet (ALL), 1.8 1	RDA		6.1	12.03	36.0	A	G1
8166.100	IN-EX	ESCORT VI Cabriolet (ALL), 1.8 1	RQB		6.1	12.03	36.0	A	G1
8212.600	IN-EX	ESCORT VI Kombi (GAL), 1.4	F4B/FUH	81SM6510LC	8.1	13.56	65.0	F	G
8212.600	IN-EX	ESCORT VI Kombi (GAL), 1.4	F6F/F6G	81SM6510LC	8.1	13.56	65.0	F	G
8212.600	IN-EX	ESCORT VI Stufenheck (GAL), 1.	F4B/FUH	81SM6510LC	8.1	13.56	65.0	F	G
8166.100	IN-EX	ESCORT VI Stufenheck (GAL), 1.	L1E/L1K		6.1	12.03	36.0	A	G1

(D1) Internal diameter, (D2) External diameter, (B) Shape, (C) Material

VALVE GUIDES

IVT Ref.	Type	Model	Engine	OEM Ref.	D1	D2	Length	B	C
FORD									
8166.100	IN-EX	ESCORT VI Stufenheck (GAL), 1.	L1H		6.1	12.03	36.0	A	G1
8166.100	IN-EX	ESCORT VI Stufenheck (GAL), 1.	RDA		6.1	12.03	36.0	A	G1
8212.600	IN-EX	ESCORT VII (GAL, AAL, ABL), 1.	F4B	81SM6510LC	8.1	13.56	65.0	F	G
8166.100	IN-EX	ESCORT VII (GAL, AAL, ABL), 1.	L1E		6.1	12.03	36.0	A	G1
8166.100	IN-EX	ESCORT VII (GAL, AAL, ABL), 1.	L1E		6.1	12.03	36.0	A	G1
8166.100	IN-EX	ESCORT VII (GAL, AAL, ABL), 1.	L1H		6.1	12.03	36.0	A	G1
8166.100	IN-EX	ESCORT VII (GAL, AAL, ABL), 1.	RDA		6.1	12.03	36.0	A	G1
8166.100	IN-EX	ESCORT VII (GAL, AAL, ABL), 1.	RKC		6.1	12.03	36.0	A	G1
8212.600	IN-EX	ESCORT VII Cabriolet (ALL), 1.4	F4B	81SM6510LC	8.1	13.56	65.0	F	G
8166.100	IN-EX	ESCORT VII Cabriolet (ALL), 1.6	L1E		6.1	12.03	36.0	A	G1
8166.100	IN-EX	ESCORT VII Cabriolet (ALL), 1.6	L1H		6.1	12.03	36.0	A	G1
8166.100	IN-EX	ESCORT VII Cabriolet (ALL), 1.8	RDA		6.1	12.03	36.0	A	G1
8166.100	IN-EX	ESCORT VII Cabriolet (ALL), 1.8	RKC		6.1	12.03	36.0	A	G1
8166.100	IN-EX	ESCORT VII Cabriolet (ALL), 1.8	RQB		6.1	12.03	36.0	A	G1
8212.600	IN-EX	ESCORT VII Kombi (GAL, ANL), 1	F4B/FUH	81SM6510LC	8.1	13.56	65.0	F	G
8166.100	IN-EX	ESCORT VII Kombi (GAL, ANL), 1	L1E		6.1	12.03	36.0	A	G1
8166.100	IN-EX	ESCORT VII Kombi (GAL, ANL), 1	L1H		6.1	12.03	36.0	A	G1
8166.100	IN-EX	ESCORT VII Kombi (GAL, ANL), 1	RDA		6.1	12.03	36.0	A	G1
8166.100	IN-EX	ESCORT VII Kombi (GAL, ANL), 1	RKC		6.1	12.03	36.0	A	G1
8212.600	IN-EX	ESCORT VII Stufenheck (GAL, A	F4B/FUH	81SM6510LC	8.1	13.56	65.0	F	G
8166.100	IN-EX	ESCORT VII Stufenheck (GAL, A	L1E/L1K		6.1	12.03	36.0	A	G1
8166.100	IN-EX	ESCORT VII Stufenheck (GAL, A	L1H		6.1	12.03	36.0	A	G1
8166.100	IN-EX	ESCORT VII Stufenheck (GAL, A	RDA		6.1	12.03	36.0	A	G1
8166.100	IN-EX	ESCORT VII Stufenheck (GAL, A	RKC		6.1	12.03	36.0	A	G1
8149.600	IN-EX	FIESTA I (GFBT), 0.9	TKW/TKA		7.9	12.75	54.0	F	G
8149.600	IN-EX	FIESTA I (GFBT), 0.9	TLA		7.9	12.75	54.0	F	G
8212.600	IN-EX	FIESTA I (GFBT), 1.1	GLA	81SM6510LC	8.1	13.56	65.0	F	G
8212.600	IN-EX	FIESTA I (GFBT), 1.1 (WFBT)	GLW	81SM6510LC	8.1	13.56	65.0	F	G
8212.600	IN-EX	FIESTA I (GFBT), 1.6 XR2	L3E	81SM6510LC	8.1	13.56	65.0	F	G
8149.600	IN-EX	FIESTA II (FBD), 1.0 (FBD)	TKB		7.9	12.75	54.0	F	G
8149.600	IN-EX	FIESTA II (FBD), 1.1 (FBD)	GSF/GLC		7.9	12.75	54.0	F	G
8149.600	IN-EX	FIESTA II (FBD), 1.1 (FBD)	GSH		7.9	12.75	54.0	F	G
8212.600	IN-EX	FIESTA II (FBD), 1.3 (FBD)	JPC	81SM6510LC	8.1	13.56	65.0	F	G
8212.600	IN-EX	FIESTA II (FBD), 1.4 (FBD)	F6C/F6A	81SM6510LC	8.1	13.56	65.0	F	G
8212.600	IN-EX	FIESTA II (FBD), 1.4 (FBD)	FUB	81SM6510LC	8.1	13.56	65.0	F	G
8212.600	IN-EX	FIESTA II (FBD), 1.4 (FBD)	FUD	81SM6510LC	8.1	13.56	65.0	F	G
8212.600	IN-EX	FIESTA II (FBD), 1.6 XR2 (FBD)	LUB	81SM6510LC	8.1	13.56	65.0	F	G
8212.600	IN-EX	FIESTA II (FBD), 1.6 XR2 (FBD)	LUD	81SM6510LC	8.1	13.56	65.0	F	G
8212.600	IN-EX	FIESTA III (GFJ), 1.4	F6E	81SM6510LC	8.1	13.56	65.0	F	G
8212.600	IN-EX	FIESTA III (GFJ), 1.4	FUF	81SM6510LC	8.1	13.56	65.0	F	G
8212.600	IN-EX	FIESTA III (GFJ), 1.4	FUG/FUJ	81SM6510LC	8.1	13.56	65.0	F	G
8212.600	IN-EX	FIESTA III (GFJ), 1.4 KAT	F4A	81SM6510LC	8.1	13.56	65.0	F	G
8166.100	IN-EX	FIESTA III (GFJ), 1.6 i 16V	L1G		6.1	12.03	36.0	A	G1
8212.600	IN-EX	FIESTA III (GFJ), 1.6 Turbo (FBJT	LHA	81SM6510LC	8.1	13.56	65.0	F	G
8212.600	IN-EX	FIESTA III (GFJ), 1.6 XR2i	LJD	81SM6510LC	8.1	13.56	65.0	F	G
8166.100	IN-EX	FIESTA III (GFJ), 1.8 16V	RDB		6.1	12.03	36.0	A	G1
8166.100	IN-EX	FIESTA III (GFJ), 1.8 XR2i 16V	RQC		6.1	12.03	36.0	A	G1
8196.100	IN-EX	FIESTA IV (JA_, JB_), 1.25 i 16V	DHG/DHB/DHC/DHE/DHF/D		6.0	11.05	39.0	A	G
8196.100	IN-EX	FIESTA IV (JA_, JB_), 1.4 i 16V	FHE/FHA		6.0	11.05	39.0	A	G
8166.100	IN-EX	FIESTA IV (JA_, JB_), 1.6 16V Sp	L1V/L1T		6.1	12.03	36.0	A	G1
8149.600	IN-EX	FIESTA Kasten (WFVT), 1.0 (WF	TKA		7.9	12.75	54.0	F	G
8196.100	IN-EX	FIESTA V (JH_, JD_), 1.25 16V	FUJA/FUJB		6.0	11.05	39.0	A	G
8196.100	IN-EX	FIESTA V (JH_, JD_), 1.25 16V	M7JA/M7JB		6.0	11.05	39.0	A	G
8166.100	IN-EX	FIESTA V (JH_, JD_), 1.4 16V	FXJB/FXJA		6.1	12.03	36.0	A	G1
8165.104	IN-EX	FIESTA V (JH_, JD_), 1.4 TDCi	F6JA/F6JB	0220A6	5.5	9.55	34.0	A	S03
8021.900	IN-EX	FIESTA V (JH_, JD_), 1.6 16V	-		6.0	11.04	40.5	P	G
8165.104	IN-EX	FIESTA V (JH_, JD_), 1.6 TDCi	HHJA/HHJB	0220A6	5.5	9.55	34.0	A	S03
8165.104	IN-EX	FIESTA V Van, 1.4 TDCi	F6JA/F6JB	0220A6	5.5	9.55	34.0	A	S03
8165.104	IN-EX	FIESTA VI Van, 1.4 TDCi	F6JB	0220A6	5.5	9.55	34.0	A	S03
8165.104	IN-EX	FIESTA VI Van, 1.4 TDCi	KVJA/F6JD	0220A6	5.5	9.55	34.0	A	S03
8165.104	IN-EX	FIESTA VI, 1.6 TDCi	HHJC/HHJD/HHJE	0220A6	5.5	9.55	34.0	A	S03
8165.104	IN-EX	FIESTA VI, 1.6 TDCi	TZJB/TZJA/T3JA	0220A6	5.5	9.55	34.0	A	S03

(D1) Internal diameter, (D2) External diameter, (B) Shape, (C) Material

VALVE GUIDES

IVT Ref.	Type	Model	Engine	OEM Ref.	D1	D2	Length	B	C
FORD									
8165.104	IN-EX	FIESTA VI, 1.6 TDCi	UBJA/HHJF	0220A6	5.5	9.55	34.0	A	S03
8166.100	IN-EX	FOCUS (DAW, DBW), 1.4 16V	FXDA/FXDD/FXDC/FXDB		6.1	12.03	36.0	A	G1
8021.900	IN-EX	FOCUS (DAW, DBW), 1.6 16V	-		6.0	11.04	40.5	P	G
8166.100	IN-EX	FOCUS (DAW, DBW), 1.8 16V	EYDD/EYDC/EYDE/EYDL/E		6.1	12.03	36.0	A	G1
8166.100	IN-EX	FOCUS (DAW, DBW), 2.0 16V	EDDC/EDDB/EDDD/EDDF		6.1	12.03	36.0	A	G1
8021.900	IN-EX	FOCUS C-MAX, 1.6	-		6.0	11.04	40.5	P	G
8165.104	IN-EX	FOCUS C-MAX, 1.6 TDCi	G8DA/G8DB	0220A6	5.5	9.55	34.0	A	S03
8165.104	IN-EX	FOCUS C-MAX, 1.6 TDCi	HHDA/HHDB	0220A6	5.5	9.55	34.0	A	S03
8021.900	IN-EX	FOCUS C-MAX, 1.6 Ti	-		6.0	11.04	40.5	P	G
8129.104	IN-EX	FOCUS C-MAX, 1.8	CSDB/CSDA	LFY110281	5.5	11.05	39.0	A	S03
8129.104	IN-EX	FOCUS C-MAX, 1.8	QQDA/QQDB/Q7DA	LFY110281	5.5	11.05	39.0	A	S03
8129.104	IN-EX	FOCUS C-MAX, 1.8 Flexifuel	Q7DA	LFY110281	5.5	11.05	39.0	A	S03
8129.104	IN-EX	FOCUS C-MAX, 2.0	AODA/AODB/SYDA	LFY110281	5.5	11.05	39.0	A	S03
8166.100	IN-EX	FOCUS II (DA_), 1.4	ASDB/ASDA		6.1	12.03	36.0	A	G1
8021.900	IN-EX	FOCUS II (DA_), 1.6	-		6.0	11.04	40.5	P	G
8165.104	IN-EX	FOCUS II (DA_), 1.6 TDCi	G8DA/G8DB/G8DE/G8DD/G	0220A6	5.5	9.55	34.0	A	S03
8165.104	IN-EX	FOCUS II (DA_), 1.6 TDCi	GPDC/HHDA/GPDB/HHDB/	0220A6	5.5	9.55	34.0	A	S03
8021.900	IN-EX	FOCUS II (DA_), 1.6 Ti	-		6.0	11.04	40.5	P	G
8129.104	IN-EX	FOCUS II (DA_), 1.8	QQDB	LFY110281	5.5	11.05	39.0	A	S03
8129.104	IN-EX	FOCUS II (DA_), 1.8 Flexifuel	Q7DA	LFY110281	5.5	11.05	39.0	A	S03
8129.104	IN-EX	FOCUS II (DA_), 2.0	AODA/AODB/AODE	LFY110281	5.5	11.05	39.0	A	S03
8129.104	IN-EX	FOCUS II (DA_), 2.0 CNG	SYDA	LFY110281	5.5	11.05	39.0	A	S03
8129.104	IN-EX	FOCUS II (DA_), 2.0 LPG	SYDA	LFY110281	5.5	11.05	39.0	A	S03
8021.900	IN-EX	FOCUS II Cabriolet, 1.6	-		6.0	11.04	40.5	P	G
8129.104	IN-EX	FOCUS II Cabriolet, 2.0	AODA/AODB	LFY110281	5.5	11.05	39.0	A	S03
8166.100	IN-EX	FOCUS II Kombi (DA_), 1.4	ASDB/ASDA		6.1	12.03	36.0	A	G1
8021.900	IN-EX	FOCUS II Kombi (DA_), 1.6	-		6.0	11.04	40.5	P	G
8165.104	IN-EX	FOCUS II Kombi (DA_), 1.6 TDCi	G8DA/G8DB/G8DE/G8DD/G	0220A6	5.5	9.55	34.0	A	S03
8165.104	IN-EX	FOCUS II Kombi (DA_), 1.6 TDCi	GPDC/HHDA/HHDB/GPDA	0220A6	5.5	9.55	34.0	A	S03
8021.900	IN-EX	FOCUS II Kombi (DA_), 1.6 Ti	-		6.0	11.04	40.5	P	G
8129.104	IN-EX	FOCUS II Kombi (DA_), 1.8 Flexif	Q7DA	LFY110281	5.5	11.05	39.0	A	S03
8129.104	IN-EX	FOCUS II Kombi (DA_), 2.0	AODA/AODB/AODE	LFY110281	5.5	11.05	39.0	A	S03
8129.104	IN-EX	FOCUS II Kombi (DA_), 2.0 LPG	SYDA	LFY110281	5.5	11.05	39.0	A	S03
8166.100	IN-EX	FOCUS II Stufenheck (DA_), 1.4	ASDB/ASDA		6.1	12.03	36.0	A	G1
8021.900	IN-EX	FOCUS II Stufenheck (DA_), 1.6	-		6.0	11.04	40.5	P	G
8165.104	IN-EX	FOCUS II Stufenheck (DA_), 1.6 T	G8DA/G8DB/G8DE/G8DD/G	0220A6	5.5	9.55	34.0	A	S03
8165.104	IN-EX	FOCUS II Stufenheck (DA_), 1.6 T	HHDA/HHDB	0220A6	5.5	9.55	34.0	A	S03
8021.900	IN-EX	FOCUS II Stufenheck (DA_), 1.6 T	-		6.0	11.04	40.5	P	G
8129.104	IN-EX	FOCUS II Stufenheck (DA_), 1.8 F	Q7DA	LFY110281	5.5	11.05	39.0	A	S03
8129.104	IN-EX	FOCUS II Stufenheck (DA_), 2.0	AODA/AODB	LFY110281	5.5	11.05	39.0	A	S03
8165.104	IN-EX	FOCUS III Stufenheck, 1.6 TDCi	T1DB/T1DA	0220A6	5.5	9.55	34.0	A	S03
8165.104	IN-EX	FOCUS III Stufenheck, 1.6 TDCi	T3DA/T3DB	0220A6	5.5	9.55	34.0	A	S03
8165.104	IN-EX	FOCUS III Turnier, 1.6 TDCi	T1DB/T1DA	0220A6	5.5	9.55	34.0	A	S03
8165.104	IN-EX	FOCUS III Turnier, 1.6 TDCi	T3DA/T3DB	0220A6	5.5	9.55	34.0	A	S03
8165.104	IN-EX	FOCUS III, 1.6 TDCi	T1DB/T1DA	0220A6	5.5	9.55	34.0	A	S03
8165.104	IN-EX	FOCUS III, 1.6 TDCi	T3DA/T3DB	0220A6	5.5	9.55	34.0	A	S03
8166.100	IN-EX	FOCUS Kombi (DNW), 1.4 16V	FXDA/FXDD/FXDC/FXDB		6.1	12.03	36.0	A	G1
8021.900	IN-EX	FOCUS Kombi (DNW), 1.6 16V	-		6.0	11.04	40.5	P	G
8166.100	IN-EX	FOCUS Kombi (DNW), 1.8 16V	EYDD/EYDC/EYDE/EYDL/E		6.1	12.03	36.0	A	G1
8166.100	IN-EX	FOCUS Kombi (DNW), 2.0 16V	EDDC/EDDB/EDDD/EDDF		6.1	12.03	36.0	A	G1
8166.100	IN-EX	FOCUS Stufenheck (DFW), 1.4 16	FXDA/FXDD/FXDC/FXDB		6.1	12.03	36.0	A	G1
8021.900	IN-EX	FOCUS Stufenheck (DFW), 1.6 16	-		6.0	11.04	40.5	P	G
8166.100	IN-EX	FOCUS Stufenheck (DFW), 1.8 16	EYDD/EYDC/EYDE/EYDL/E		6.1	12.03	36.0	A	G1
8166.100	IN-EX	FOCUS Stufenheck (DFW), 2.0 16	EDDC/EDDB/EDDD/EDDF		6.1	12.03	36.0	A	G1
8166.100	IN-EX	FUSION (JU_), 1.4	FXJC/FXJB/FXJA		6.1	12.03	36.0	A	G1
8165.104	IN-EX	FUSION (JU_), 1.4 TDCi	F6JA/F6JB	0220A6	5.5	9.55	34.0	A	S03
8021.900	IN-EX	FUSION (JU_), 1.6	-		6.0	11.04	40.5	P	G
8165.104	IN-EX	FUSION (JU_), 1.6 TDCi	HHJA/HHJB	0220A6	5.5	9.55	34.0	A	S03
8129.104	IN-EX	GALAXY (WA6), 2.0	AOWB/AOWA	LFY110281	5.5	11.05	39.0	A	S03
8129.104	IN-EX	GALAXY (WA6), 2.0 Flexifuel	TBWA/TBWB	LFY110281	5.5	11.05	39.0	A	S03
8129.104	IN-EX	GALAXY (WA6), 2.3	SEWA	LFY110281	5.5	11.05	39.0	A	S03
8052.701	IN-EX	GALAXY (WGR), 1.9 TDI	ANU/AHU/1Z	0371034188	7.0	12.06	36.4	G	B

(D1) Internal diameter, (D2) External diameter, (B) Shape, (C) Material

VALVE GUIDES

IVT Ref.	Type	Model	Engine	OEM Ref.	D1	D2	Length	B	C
FORD									
8052.701	IN-EX	GALAXY (WGR), 1.9 TDI	ASZ	0371034188	7.0	12.06	36.4	G	B
8052.701	IN-EX	GALAXY (WGR), 1.9 TDI	AUY	0371034188	7.0	12.06	36.4	G	B
8052.701	IN-EX	GALAXY (WGR), 1.9 TDI	AVG/AFN	0371034188	7.0	12.06	36.4	G	B
8006.105	IN-EX	Galaxy 2.2 TDCi	Q4BA	0220A2	6.0	10.06	41.5	A	S06
8006.105	IN-EX	Galaxy 2.2 TDCi	Q4BA	0220A2	6.0	10.06	41.5	A	S06
8006.105	IN-EX	Galaxy 2.2 TDCi	Q4BA	9640340380	6.0	10.06	41.5	A	S06
8006.105	IN-EX	Galaxy 2.2 TDCi	Q4BA	9640340380	6.0	10.06	41.5	A	S06
8180.100	IN-EX	GRANADA (GU), 1.9 D	-	22016	8.5	14.05	55.0	A	G
8180.100	IN-EX	GRANADA (GU), 2.1 D	WTA	22016	8.5	14.05	55.0	A	G
8180.100	IN-EX	GRANADA (GU), 2.5 D	STP	22016	8.5	14.05	55.0	A	G
8165.104	IN-EX	GRAND C-MAX (DXA/CB7, DXA/	T1DB/T1DA	0220A6	5.5	9.55	34.0	A	S03
8165.104	IN-EX	GRAND C-MAX (DXA/CB7, DXA/	T3DA/T3DB	0220A6	5.5	9.55	34.0	A	S03
8008.605	IN-EX	Ka 1.2	FP4	55190559	5.0	10.03	44.0	F	S06
8008.605	IN-EX	Ka 1.2	FP4	55190561	5.0	10.03	44.0	F	S06
8129.104	IN-EX	MAVERICK, 2.3 16V	GZ	LFY110281	5.5	11.05	39.0	A	S03
8166.100	IN-EX	MONDEO I (GBP), 1.6 i 16V	L1F		6.1	12.03	36.0	A	G1
8166.100	IN-EX	MONDEO I (GBP), 1.6 i 16V	L1J		6.1	12.03	36.0	A	G1
8166.100	IN-EX	MONDEO I (GBP), 1.8 i 16V	RKB		6.1	12.03	36.0	A	G1
8166.100	IN-EX	MONDEO I (GBP), 2.0 i 16V	NGA		6.1	12.03	36.0	A	G1
8166.100	IN-EX	MONDEO I (GBP), 2.0 i 16V	NGA		6.1	12.03	36.0	A	G1
8166.100	IN-EX	MONDEO I (GBP), 2.0 i 16V 4x4	NGA		6.1	12.03	36.0	A	G1
8166.100	IN-EX	MONDEO I (GBP), 2.0 i 16V 4x4	NGA		6.1	12.03	36.0	A	G1
8166.100	IN-EX	MONDEO I Kombi (BNP), 1.6 i 16	L1F		6.1	12.03	36.0	A	G1
8166.100	IN-EX	MONDEO I Kombi (BNP), 1.6 i 16	L1J		6.1	12.03	36.0	A	G1
8166.100	IN-EX	MONDEO I Kombi (BNP), 1.8 i 16	RKB		6.1	12.03	36.0	A	G1
8166.100	IN-EX	MONDEO I Kombi (BNP), 2.0 i 16	NGA		6.1	12.03	36.0	A	G1
8166.100	IN-EX	MONDEO I Kombi (BNP), 2.0 i 16	NGA		6.1	12.03	36.0	A	G1
8166.100	IN-EX	MONDEO I Kombi (BNP), 2.0 i 16	NGA		6.1	12.03	36.0	A	G1
8166.100	IN-EX	MONDEO I Kombi (BNP), 2.0 i 16	NGA		6.1	12.03	36.0	A	G1
8166.100	IN-EX	MONDEO I Stufenheck (GBP), 1.	L1F		6.1	12.03	36.0	A	G1
8166.100	IN-EX	MONDEO I Stufenheck (GBP), 1.	L1J		6.1	12.03	36.0	A	G1
8166.100	IN-EX	MONDEO I Stufenheck (GBP), 1.	RKB		6.1	12.03	36.0	A	G1
8166.100	IN-EX	MONDEO I Stufenheck (GBP), 2.	NGA		6.1	12.03	36.0	A	G1
8166.100	IN-EX	MONDEO I Stufenheck (GBP), 2.	NGA		6.1	12.03	36.0	A	G1
8166.100	IN-EX	MONDEO II (BAP), 1.6 i	L1J		6.1	12.03	36.0	A	G1
8166.100	IN-EX	MONDEO II (BAP), 1.6 i 16V	L1N/L1L/L1Q		6.1	12.03	36.0	A	G1
8166.100	IN-EX	MONDEO II (BAP), 1.8 i	RKK/RKJ/RKB/RKF/RKH		6.1	12.03	36.0	A	G1
8166.100	IN-EX	MONDEO II (BAP), 2.0 i	NGA/NGB/NGD/NGC		6.1	12.03	36.0	A	G1
8166.100	IN-EX	MONDEO II Kombi (BNP), 1.6 i	L1J		6.1	12.03	36.0	A	G1
8166.100	IN-EX	MONDEO II Kombi (BNP), 1.6 i 16	L1N/L1L/L1Q		6.1	12.03	36.0	A	G1
8166.100	IN-EX	MONDEO II Kombi (BNP), 1.8 i	RKK/RKJ/RKB/RKF/RKH		6.1	12.03	36.0	A	G1
8166.100	IN-EX	MONDEO II Kombi (BNP), 2.0 i	NGA/NGB/NGD/NGC		6.1	12.03	36.0	A	G1
8166.100	IN-EX	MONDEO II Stufenheck (BFP), 1.	L1J		6.1	12.03	36.0	A	G1
8166.100	IN-EX	MONDEO II Stufenheck (BFP), 1.	L1N/L1L/L1Q		6.1	12.03	36.0	A	G1
8166.100	IN-EX	MONDEO II Stufenheck (BFP), 1.	RKK/RKJ/RKB/RKF/RKH		6.1	12.03	36.0	A	G1
8166.100	IN-EX	MONDEO II Stufenheck (BFP), 2.	NGA/NGB/NGD/NGC		6.1	12.03	36.0	A	G1
8166.100	IN-EX	MONDEO III (B5Y), 1.8 16V	CGBB/CGBA		6.1	12.03	36.0	A	G1
8166.100	IN-EX	MONDEO III (B5Y), 1.8 16V	CHBA/CHBB		6.1	12.03	36.0	A	G1
8129.104	IN-EX	MONDEO III (B5Y), 2.0 16V	CJBA/CJBB	LFY110281	5.5	11.05	39.0	A	S03
8166.100	IN-EX	MONDEO III Kombi (BWY), 1.8 16	CGBB/CGBA		6.1	12.03	36.0	A	G1
8166.100	IN-EX	MONDEO III Kombi (BWY), 1.8 16	CHBA/CHBB		6.1	12.03	36.0	A	G1
8129.104	IN-EX	MONDEO III Kombi (BWY), 2.0 16	CJBA/CJBB	LFY110281	5.5	11.05	39.0	A	S03
8166.100	IN-EX	MONDEO III Stufenheck (B4Y), 1.	CGBB/CGBA		6.1	12.03	36.0	A	G1
8166.100	IN-EX	MONDEO III Stufenheck (B4Y), 1.	CHBA/CHBB		6.1	12.03	36.0	A	G1
8129.104	IN-EX	MONDEO III Stufenheck (B4Y), 2.	CJBA/CJBB	LFY110281	5.5	11.05	39.0	A	S03
8021.900	IN-EX	MONDEO IV (BA7), 1.6 Ti	-		6.0	11.04	40.5	P	G
8021.900	IN-EX	MONDEO IV (BA7), 1.6 Ti	-		6.0	11.04	40.5	P	G
8129.104	IN-EX	MONDEO IV (BA7), 2.0	AOBC/AOBA/TBBA	LFY110281	5.5	11.05	39.0	A	S03
8129.104	IN-EX	MONDEO IV (BA7), 2.3	SEBA	LFY110281	5.5	11.05	39.0	A	S03
8006.105	IN-EX	Mondeo IV 2.2 TDCi	Q4BA	0220A2	6.0	10.06	41.5	A	S06
8006.105	IN-EX	Mondeo IV 2.2 TDCi	Q4BA	0220A2	6.0	10.06	41.5	A	S06
8006.105	IN-EX	Mondeo IV 2.2 TDCi	Q4BA	9640340380	6.0	10.06	41.5	A	S06

(D1) Internal diameter, (D2) External diameter, (B) Shape, (C) Material

VALVE GUIDES

IVT Ref.	Type	Model	Engine	OEM Ref.	D1	D2	Length	B	C
FORD									
8006.105	IN-EX	Mondeo IV 2.2 TDCi	Q4BA	9640340380	6.0	10.06	41.5	A	S06
8006.105	IN-EX	Mondeo IV 3volumi 2.2 TDCi	Q4BA	0220A2	6.0	10.06	41.5	A	S06
8006.105	IN-EX	Mondeo IV 3volumi 2.2 TDCi	Q4BA	0220A2	6.0	10.06	41.5	A	S06
8006.105	IN-EX	Mondeo IV 3volumi 2.2 TDCi	Q4BA	9640340380	6.0	10.06	41.5	A	S06
8006.105	IN-EX	Mondeo IV 3volumi 2.2 TDCi	Q4BA	9640340380	6.0	10.06	41.5	A	S06
8021.900	IN-EX	MONDEO IV Stufenheck (BA7), 1.	-		6.0	11.04	40.5	P	G
8129.104	IN-EX	MONDEO IV Stufenheck (BA7), 2.	AOBC/AOBA/TBBA	LFY110281	5.5	11.05	39.0	A	S03
8129.104	IN-EX	MONDEO IV Stufenheck (BA7), 2.	SEBA	LFY110281	5.5	11.05	39.0	A	S03
8021.900	IN-EX	MONDEO IV Turnier (BA7), 1.6 Ti	-		6.0	11.04	40.5	P	G
8021.900	IN-EX	MONDEO IV Turnier (BA7), 1.6 Ti	-		6.0	11.04	40.5	P	G
8129.104	IN-EX	MONDEO IV Turnier (BA7), 2.0	AOBC/AOBA/TBBA	LFY110281	5.5	11.05	39.0	A	S03
8129.104	IN-EX	MONDEO IV Turnier (BA7), 2.3	SEBA	LFY110281	5.5	11.05	39.0	A	S03
8006.105	IN-EX	Mondeo IV Turnier 2.2 TDCi	Q4BA	0220A2	6.0	10.06	41.5	A	S06
8006.105	IN-EX	Mondeo IV Turnier 2.2 TDCi	Q4BA	0220A2	6.0	10.06	41.5	A	S06
8006.105	IN-EX	Mondeo IV Turnier 2.2 TDCi	Q4BA	9640340380	6.0	10.06	41.5	A	S06
8006.105	IN-EX	Mondeo IV Turnier 2.2 TDCi	Q4BA	9640340380	6.0	10.06	41.5	A	S06
8212.600	IN-EX	ORION I (AFD), 1.3	JPA	81SM6510LC	8.1	13.56	65.0	F	G
8212.600	IN-EX	ORION I (AFD), 1.6	LP1/LPA	81SM6510LC	8.1	13.56	65.0	F	G
8212.600	IN-EX	ORION I (AFD), 1.6 i	LRA/LR1	81SM6510LC	8.1	13.56	65.0	F	G
8212.600	IN-EX	ORION II (AFF), 1.3	JLA/JBB/JLB	81SM6510LC	8.1	13.56	65.0	F	G
8212.600	IN-EX	ORION II (AFF), 1.4	FUA	81SM6510LC	8.1	13.56	65.0	F	G
8212.600	IN-EX	ORION II (AFF), 1.4	FUAA	81SM6510LC	8.1	13.56	65.0	F	G
8212.600	IN-EX	ORION II (AFF), 1.4	FUC	81SM6510LC	8.1	13.56	65.0	F	G
8212.600	IN-EX	ORION II (AFF), 1.4 KAT	F6D/F6B	81SM6510LC	8.1	13.56	65.0	F	G
8212.600	IN-EX	ORION II (AFF), 1.6	LUC	81SM6510LC	8.1	13.56	65.0	F	G
8212.600	IN-EX	ORION II (AFF), 1.6 i	LJB	81SM6510LC	8.1	13.56	65.0	F	G
8212.600	IN-EX	ORION II (AFF), 1.6 i	LRB	81SM6510LC	8.1	13.56	65.0	F	G
8212.600	IN-EX	ORION III (GAL), 1.4	F6F/F6G	81SM6510LC	8.1	13.56	65.0	F	G
8212.600	IN-EX	ORION III (GAL), 1.4	FUH	81SM6510LC	8.1	13.56	65.0	F	G
8212.600	IN-EX	ORION III (GAL), 1.6	LUJ/LUK	81SM6510LC	8.1	13.56	65.0	F	G
8212.600	IN-EX	ORION III (GAL), 1.6 i	LJF	81SM6510LC	8.1	13.56	65.0	F	G
8166.100	IN-EX	ORION III (GAL), 1.6 i 16V	L1E/L1K		6.1	12.03	36.0	A	G1
8166.100	IN-EX	ORION III (GAL), 1.8 i 16V	RDA		6.1	12.03	36.0	A	G1
8166.100	IN-EX	ORION III (GAL), 1.8 i 16V	RQB		6.1	12.03	36.0	A	G1
8196.100	IN-EX	PUMA (EC_), 1.4 16V	FHD/FHF		6.0	11.05	39.0	A	G
8021.900	IN-EX	PUMA (EC_), 1.6 16V	-		6.0	11.04	40.5	P	G
8166.100	IN-EX	PUMA (EC_), 1.7 16V	MHB/MHA		6.1	12.03	36.0	A	G1
8180.100	IN-EX	SCORPIO I (GAE, GGE), 2.5 D	STR	22016	8.5	14.05	55.0	A	G
8180.100	IN-EX	SCORPIO I (GAE, GGE), 2.5 TD	SFA/SFB	22016	8.5	14.05	55.0	A	G
8180.100	IN-EX	SCORPIO I Stufenheck (GGE), 2.	STR	22016	8.5	14.05	55.0	A	G
8180.100	IN-EX	SCORPIO I Stufenheck (GGE), 2.	SFA/SFB	22016	8.5	14.05	55.0	A	G
8212.600	IN-EX	SIERRA (GBG, GB4), 1.6 i	L6B	81SM6510LC	8.1	13.56	65.0	F	G
8212.600	IN-EX	SIERRA (GBG, GB4), 1.8	R2C/R6A	81SM6510LC	8.1	13.56	65.0	F	G
8212.600	IN-EX	SIERRA (GBG, GB4), 1.8	RED/R2A	81SM6510LC	8.1	13.56	65.0	F	G
8180.100	IN-EX	SIERRA (GBG, GB4), 2.3 D	YTR/YTT	22016	8.5	14.05	55.0	A	G
8212.600	IN-EX	SIERRA Kombi (BNG), 1.6 i	L6B	81SM6510LC	8.1	13.56	65.0	F	G
8212.600	IN-EX	SIERRA Kombi (BNG), 1.8	R2C/R6A	81SM6510LC	8.1	13.56	65.0	F	G
8212.600	IN-EX	SIERRA Kombi (BNG), 1.8	RED/R2A	81SM6510LC	8.1	13.56	65.0	F	G
8180.100	IN-EX	SIERRA Schrägheck (GBC), 2.3 D	YTT	22016	8.5	14.05	55.0	A	G
8212.600	IN-EX	SIERRA Schrägheck (GBC, GBG)	L6B	81SM6510LC	8.1	13.56	65.0	F	G
8212.600	IN-EX	SIERRA Schrägheck (GBC, GBG)	R2C/R6A	81SM6510LC	8.1	13.56	65.0	F	G
8212.600	IN-EX	SIERRA Schrägheck (GBC, GBG)	RED/R2A	81SM6510LC	8.1	13.56	65.0	F	G
8180.100	IN-EX	SIERRA Schrägheck (GBC, GBG)	YTR	22016	8.5	14.05	55.0	A	G
8165.104	IN-EX	S-MAX (WA6), 1.6 TDCi	T1WA/T1WB	0220A6	5.5	9.55	34.0	A	S03
8129.104	IN-EX	S-MAX (WA6), 2.0	AOWB/AOWA	LFY110281	5.5	11.05	39.0	A	S03
8129.104	IN-EX	S-MAX (WA6), 2.3	SEWA	LFY110281	5.5	11.05	39.0	A	S03
8166.100	IN-EX	TOURNEO CONNECT, 1.8 16V	EYPC/EYPA/EYPD		6.1	12.03	36.0	A	G1
8166.100	IN-EX	TRANSIT CONNECT (P65_, P70_	EYPC/EYPA/EYPD		6.1	12.03	36.0	A	G1
HONDA									
8155.600	IN	ACCORD IV (CB), 2.0 16V (CB3)	F20A3/F20A2	12204PJ7305	5.5	11.06	47.5	F	G1
8179.600	EX	ACCORD IV (CB), 2.0 16V (CB3)	F20A3/F20A2	12205PJ7305	5.5	11.06	54.0	F	G1

(D1) Internal diameter, (D2) External diameter, (B) Shape, (C) Material

VALVE GUIDES

HONDA

IVT Ref.	Type	Model	Engine	OEM Ref.	D1	D2	Length	B	C
8155.600	IN	ACCORD IV (CB), 2.0 16V (CB3)	F20A6	12204PJ7305	5.5	11.06	47.5	F	G1
8179.600	EX	ACCORD IV (CB), 2.0 16V (CB3)	F20A6	12205PJ7305	5.5	11.06	54.0	F	G1
8155.600	IN	ACCORD IV (CB), 2.0 i 16V (CB3)	F20A4/F20A8	12204PJ7305	5.5	11.06	47.5	F	G1
8179.600	EX	ACCORD IV (CB), 2.0 i 16V (CB3)	F20A4/F20A8	12205PJ7305	5.5	11.06	54.0	F	G1
8155.600	IN	ACCORD IV (CB), 2.2 i 16V (CB7)	F22A3	12204PJ7305	5.5	11.06	47.5	F	G1
8179.600	EX	ACCORD IV (CB), 2.2 i 16V (CB7)	F22A3	12205PJ7305	5.5	11.06	54.0	F	G1
8155.600	IN	ACCORD IV (CB), 2.2 i 16V Auto	F22A3	12204PJ7305	5.5	11.06	47.5	F	G1
8179.600	EX	ACCORD IV (CB), 2.2 i 16V Auto	F22A3	12205PJ7305	5.5	11.06	54.0	F	G1
8155.600	IN	ACCORD IV Aerodeck (CB), 2.0 i	F20Z3	12204PJ7305	5.5	11.06	47.5	F	G1
8179.600	EX	ACCORD IV Aerodeck (CB), 2.0 i	F20Z3	12205PJ7305	5.5	11.06	54.0	F	G1
8155.600	IN	ACCORD IV Aerodeck (CB), 2.2 i	F22A7	12204PJ7305	5.5	11.06	47.5	F	G1
8179.600	EX	ACCORD IV Aerodeck (CB), 2.2 i	F22A7	12205PJ7305	5.5	11.06	54.0	F	G1
8155.600	IN	ACCORD IV Aerodeck (CB), 2.2 i	F22A8	12204PJ7305	5.5	11.06	47.5	F	G1
8179.600	EX	ACCORD IV Aerodeck (CB), 2.2 i	F22A8	12205PJ7305	5.5	11.06	54.0	F	G1
8155.600	IN	ACCORD IV Coupe (CB, CC), 2.0	F20A7	12204PJ7305	5.5	11.06	47.5	F	G1
8179.600	EX	ACCORD IV Coupe (CB, CC), 2.0	F20A7	12205PJ7305	5.5	11.06	54.0	F	G1
8155.600	IN	ACCORD V (CC, CD), 2.0 i	F20Z2	12204PJ7305	5.5	11.06	47.5	F	G1
8179.600	EX	ACCORD V (CC, CD), 2.0 i	F20Z2	12205PJ7305	5.5	11.06	54.0	F	G1
8155.600	IN	ACCORD V (CC, CD), 2.0 i S	F20Z1	12204PJ7305	5.5	11.06	47.5	F	G1
8179.600	EX	ACCORD V (CC, CD), 2.0 i S	F20Z1	12205PJ7305	5.5	11.06	54.0	F	G1
8155.600	IN	ACCORD V (CE, CF), 1.9 i (CE7)	F18A3	12204PJ7305	5.5	11.06	47.5	F	G1
8179.600	EX	ACCORD V (CE, CF), 1.9 i (CE7)	F18A3	12205PJ7305	5.5	11.06	54.0	F	G1
8155.600	IN	ACCORD V (CE, CF), 2.0 i LS (C	F20Z1	12204PJ7305	5.5	11.06	47.5	F	G1
8179.600	EX	ACCORD V (CE, CF), 2.0 i LS (C	F20Z1	12205PJ7305	5.5	11.06	54.0	F	G1
8155.600	IN	ACCORD V (CE, CF), 2.2 i VTEC	F22Z2	12204PJ7305	5.5	11.06	47.5	F	G1
8179.600	EX	ACCORD V (CE, CF), 2.2 i VTEC	F22Z2	12205PJ7305	5.5	11.06	54.0	F	G1
8155.600	IN	ACCORD V Aerodeck (CE), 2.0 i L	F20B3	12204PJ7305	5.5	11.06	47.5	F	G1
8179.600	EX	ACCORD V Aerodeck (CE), 2.0 i L	F20B3	12205PJ7305	5.5	11.06	54.0	F	G1
8155.600	IN	ACCORD V Aerodeck (CE), 2.2 i	F22B5	12204PJ7305	5.5	11.06	47.5	F	G1
8179.600	EX	ACCORD V Aerodeck (CE), 2.2 i	F22B5	12205PJ7305	5.5	11.06	54.0	F	G1
8155.600	IN	ACCORD V Coupe (CD), 2.0 (CD	F20B3	12204PJ7305	5.5	11.06	47.5	F	G1
8179.600	EX	ACCORD V Coupe (CD), 2.0 (CD	F20B3	12205PJ7305	5.5	11.06	54.0	F	G1
8155.600	IN	ACCORD V Coupe (CD), 2.2 i ES	F22B5	12204PJ7305	5.5	11.06	47.5	F	G1
8179.600	EX	ACCORD V Coupe (CD), 2.2 i ES	F22B5	12205PJ7305	5.5	11.06	54.0	F	G1
8155.600	IN	ACCORD VI (CG, CK), 1.6 i	D16B6	12204PJ7305	5.5	11.06	47.5	F	G1
8179.600	EX	ACCORD VI (CG, CK), 1.6 i	D16B6	12205PJ7305	5.5	11.06	54.0	F	G1
8155.600	IN	ACCORD VI (CG, CK), 1.8 i	F18B2	12204PJ7305	5.5	11.06	47.5	F	G1
8179.600	EX	ACCORD VI (CG, CK), 1.8 i	F18B2	12205PJ7305	5.5	11.06	54.0	F	G1
8155.600	IN	ACCORD VI (CG, CK), 2.0 i	F20B6	12204PJ7305	5.5	11.06	47.5	F	G1
8179.600	EX	ACCORD VI (CG, CK), 2.0 i	F20B6	12205PJ7305	5.5	11.06	54.0	F	G1
8155.600	IN	ACCORD VI (CG, CK), 2.3 (CK2)	F23Z5/F23A1	12204PJ7305	5.5	11.06	47.5	F	G1
8179.600	EX	ACCORD VI (CG, CK), 2.3 (CK2)	F23Z5/F23A1	12205PJ7305	5.5	11.06	54.0	F	G1
8155.600	IN	ACCORD VI Coupe (CG), 2.0 i 16	F20B7/F20B5	12204PJ7305	5.5	11.06	47.5	F	G1
8179.600	EX	ACCORD VI Coupe (CG), 2.0 i 16	F20B7/F20B5	12205PJ7305	5.5	11.06	54.0	F	G1
8155.600	IN	ACCORD VI Coupe (CG), 3.0 V6	J30A1	12204PJ7305	5.5	11.06	47.5	F	G1
8179.600	EX	ACCORD VI Coupe (CG), 3.0 V6	J30A1	12205PJ7305	5.5	11.06	54.0	F	G1
8155.600	IN	ACCORD VI Hatchback (CH), 1.8	F18B2	12204PJ7305	5.5	11.06	47.5	F	G1
8179.600	EX	ACCORD VI Hatchback (CH), 1.8	F18B2	12205PJ7305	5.5	11.06	54.0	F	G1
8155.600	IN	ACCORD VI Hatchback (CH), 2.0	F20B6	12204PJ7305	5.5	11.06	47.5	F	G1
8179.600	EX	ACCORD VI Hatchback (CH), 2.0	F20B6	12205PJ7305	5.5	11.06	54.0	F	G1
8155.600	IN	ACCORD VI Hatchback (CH), 2.3	F23Z5	12204PJ7305	5.5	11.06	47.5	F	G1
8179.600	EX	ACCORD VI Hatchback (CH), 2.3	F23Z5	12205PJ7305	5.5	11.06	54.0	F	G1
8155.600	IN	ACCORD VIII (CU), 2.0 i	R20A3	12204PJ7305	5.5	11.06	47.5	F	G1
8179.600	EX	ACCORD VIII (CU), 2.0 i	R20A3	12205PJ7305	5.5	11.06	54.0	F	G1
8155.600	IN	ACCORD VIII Kombi, 2.0 i	R20A3	12204PJ7305	5.5	11.06	47.5	F	G1
8179.600	EX	ACCORD VIII Kombi, 2.0 i	R20A3	12205PJ7305	5.5	11.06	54.0	F	G1
8155.600	IN	CIVIC II Shuttle (EE), 1.4 i 16V (E	D14A1	12204PJ7305	5.5	11.06	47.5	F	G1
8179.600	EX	CIVIC II Shuttle (EE), 1.4 i 16V (E	D14A1	12205PJ7305	5.5	11.06	54.0	F	G1
8155.600	IN	CIVIC II Shuttle (EE), 1.5 i 16V (E	D15B2	12204PJ7305	5.5	11.06	47.5	F	G1
8179.600	EX	CIVIC II Shuttle (EE), 1.5 i 16V (E	D15B2	12205PJ7305	5.5	11.06	54.0	F	G1
8155.600	IN	CIVIC II Shuttle (EE), 1.6 i 16V 4	D16A6	12204PJ7305	5.5	11.06	47.5	F	G1
8155.600	IN	CIVIC II Shuttle (EE), 1.6 i 16V 4	D16A6	12204PJ7305	5.5	11.06	47.5	F	G1

(D1) Internal diameter, (D2) External diameter, (B) Shape, (C) Material

VALVE GUIDES

HONDA

IVT Ref.	Type	Model	Engine	OEM Ref.	D1	D2	Length	B	C
8179.600	EX	CIVIC II Shuttle (EE), 1.6 i 16V 4	D16A6	12205PJ7305	5.5	11.06	54.0	F	G1
8179.600	EX	CIVIC II Shuttle (EE), 1.6 i 16V 4	D16A6	12205PJ7305	5.5	11.06	54.0	F	G1
8155.600	IN	CIVIC IV Hatchback (EC, ED, EE)	D13B1	12204PJ7305	5.5	11.06	47.5	F	G1
8179.600	EX	CIVIC IV Hatchback (EC, ED, EE)	D13B1	12205PJ7305	5.5	11.06	54.0	F	G1
8155.600	IN	CIVIC IV Hatchback (EC, ED, EE)	D13B2	12204PJ7305	5.5	11.06	47.5	F	G1
8179.600	EX	CIVIC IV Hatchback (EC, ED, EE)	D13B2	12205PJ7305	5.5	11.06	54.0	F	G1
8155.600	IN	CIVIC IV Hatchback (EC, ED, EE)	D14A1	12204PJ7305	5.5	11.06	47.5	F	G1
8179.600	EX	CIVIC IV Hatchback (EC, ED, EE)	D14A1	12205PJ7305	5.5	11.06	54.0	F	G1
8155.600	IN	CIVIC IV Hatchback (EC, ED, EE)	D15B2	12204PJ7305	5.5	11.06	47.5	F	G1
8179.600	EX	CIVIC IV Hatchback (EC, ED, EE)	D15B2	12205PJ7305	5.5	11.06	54.0	F	G1
8155.600	IN	CIVIC IV Hatchback (EC, ED, EE)	D15B2	12204PJ7305	5.5	11.06	47.5	F	G1
8179.600	EX	CIVIC IV Hatchback (EC, ED, EE)	D15B2	12205PJ7305	5.5	11.06	54.0	F	G1
8155.600	IN	CIVIC IV Hatchback (EC, ED, EE)	D16A9/D16A7	12204PJ7305	5.5	11.06	47.5	F	G1
8179.600	EX	CIVIC IV Hatchback (EC, ED, EE)	D16A9/D16A7	12205PJ7305	5.5	11.06	54.0	F	G1
8155.600	IN	CIVIC IV Hatchback (EC, ED, EE)	D16A6	12204PJ7305	5.5	11.06	47.5	F	G1
8179.600	EX	CIVIC IV Hatchback (EC, ED, EE)	D16A6	12205PJ7305	5.5	11.06	54.0	F	G1
8155.600	IN	CIVIC IV Hatchback (EC, ED, EE)	D16Z2	12204PJ7305	5.5	11.06	47.5	F	G1
8179.600	EX	CIVIC IV Hatchback (EC, ED, EE)	D16Z2	12205PJ7305	5.5	11.06	54.0	F	G1
8155.600	IN	CIVIC IV Stufenheck (ED), 1.3	D13B1	12204PJ7305	5.5	11.06	47.5	F	G1
8179.600	EX	CIVIC IV Stufenheck (ED), 1.3	D13B1	12205PJ7305	5.5	11.06	54.0	F	G1
8155.600	IN	CIVIC IV Stufenheck (ED), 1.4 L (	D14A1	12204PJ7305	5.5	11.06	47.5	F	G1
8179.600	EX	CIVIC IV Stufenheck (ED), 1.4 L (	D14A1	12205PJ7305	5.5	11.06	54.0	F	G1
8155.600	IN	CIVIC IV Stufenheck (ED), 1.5 i 16	D15B2	12204PJ7305	5.5	11.06	47.5	F	G1
8179.600	EX	CIVIC IV Stufenheck (ED), 1.5 i 16	D15B2	12205PJ7305	5.5	11.06	54.0	F	G1
8155.600	IN	CIVIC IV Stufenheck (ED), 1.5 i 16	D15B2	12204PJ7305	5.5	11.06	47.5	F	G1
8179.600	EX	CIVIC IV Stufenheck (ED), 1.5 i 16	D15B2	12205PJ7305	5.5	11.06	54.0	F	G1
8155.600	IN	CIVIC IV Stufenheck (ED), 1.6 i 16	D16A7	12204PJ7305	5.5	11.06	47.5	F	G1
8179.600	EX	CIVIC IV Stufenheck (ED), 1.6 i 16	D16A7	12205PJ7305	5.5	11.06	54.0	F	G1
8155.600	IN	CIVIC IV Stufenheck (ED), 1.6 i 16	D16A6	12204PJ7305	5.5	11.06	47.5	F	G1
8179.600	EX	CIVIC IV Stufenheck (ED), 1.6 i 16	D16A6	12205PJ7305	5.5	11.06	54.0	F	G1
8155.600	IN	CIVIC IV Stufenheck (ED), 1.6 i 16	D16Z2	12204PJ7305	5.5	11.06	47.5	F	G1
8179.600	EX	CIVIC IV Stufenheck (ED), 1.6 i 16	D16Z2	12205PJ7305	5.5	11.06	54.0	F	G1
8155.600	IN	CIVIC IV Stufenheck (ED), 1.6 i 16	D16A6	12204PJ7305	5.5	11.06	47.5	F	G1
8179.600	EX	CIVIC IV Stufenheck (ED), 1.6 i 16	D16A6	12205PJ7305	5.5	11.06	54.0	F	G1
8155.600	IN	CIVIC IX (FK), 1.4 i-VTEC	L13Z4	12204PJ7305	5.5	11.06	47.5	F	G1
8179.600	EX	CIVIC IX (FK), 1.4 i-VTEC	L13Z4	12205PJ7305	5.5	11.06	54.0	F	G1
8155.600	IN	CIVIC IX (FK), 1.8 i-VTEC	R18Z4	12204PJ7305	5.5	11.06	47.5	F	G1
8179.600	EX	CIVIC IX (FK), 1.8 i-VTEC	R18Z4	12205PJ7305	5.5	11.06	54.0	F	G1
8155.600	IN	CIVIC V Coupe (EJ), 1.5 i LSi (EJ	D15B7	12204PJ7305	5.5	11.06	47.5	F	G1
8179.600	EX	CIVIC V Coupe (EJ), 1.5 i LSi (EJ	D15B7	12205PJ7305	5.5	11.06	54.0	F	G1
8155.600	IN	CIVIC V Coupe (EJ), 1.6 i (EJ6)	D16Y7	12204PJ7305	5.5	11.06	47.5	F	G1
8179.600	EX	CIVIC V Coupe (EJ), 1.6 i (EJ6)	D16Y7	12205PJ7305	5.5	11.06	54.0	F	G1
8155.600	IN	CIVIC V Coupe (EJ), 1.6 i Vtec (E	D16Y6/D16Z9	12204PJ7305	5.5	11.06	47.5	F	G1
8179.600	EX	CIVIC V Coupe (EJ), 1.6 i Vtec (E	D16Y6/D16Z9	12205PJ7305	5.5	11.06	54.0	F	G1
8155.600	IN	CIVIC V Hatchback (EG), 1.3 16V	D13B2	12204PJ7305	5.5	11.06	47.5	F	G1
8179.600	EX	CIVIC V Hatchback (EG), 1.3 16V	D13B2	12205PJ7305	5.5	11.06	54.0	F	G1
8155.600	IN	CIVIC V Hatchback (EG), 1.5 i 16	D15B2/D15Z2	12204PJ7305	5.5	11.06	47.5	F	G1
8179.600	EX	CIVIC V Hatchback (EG), 1.5 i 16	D15B2/D15Z2	12205PJ7305	5.5	11.06	54.0	F	G1
8155.600	IN	CIVIC V Hatchback (EG), 1.5 i 16	D15Z1 /D15B2	12204PJ7305	5.5	11.06	47.5	F	G1
8179.600	EX	CIVIC V Hatchback (EG), 1.5 i 16	D15Z1 /D15B2	12205PJ7305	5.5	11.06	54.0	F	G1
8155.600	IN	CIVIC V Hatchback (EG), 1.6 16V	D16Z6	12204PJ7305	5.5	11.06	47.5	F	G1
8179.600	EX	CIVIC V Hatchback (EG), 1.6 16V	D16Z6	12205PJ7305	5.5	11.06	54.0	F	G1
8155.600	IN	CIVIC V Stufenheck (EG, EH), 1.3	D13B2	12204PJ7305	5.5	11.06	47.5	F	G1
8179.600	EX	CIVIC V Stufenheck (EG, EH), 1.3	D13B2	12205PJ7305	5.5	11.06	54.0	F	G1
8155.600	IN	CIVIC V Stufenheck (EG, EH), 1.5	D15Z1 /D15B2	12204PJ7305	5.5	11.06	47.5	F	G1
8179.600	EX	CIVIC V Stufenheck (EG, EH), 1.5	D15Z1 /D15B2	12205PJ7305	5.5	11.06	54.0	F	G1
8155.600	IN	CIVIC V Stufenheck (EG, EH), 1.6	D16Z6/D16Z7	12204PJ7305	5.5	11.06	47.5	F	G1
8179.600	EX	CIVIC V Stufenheck (EG, EH), 1.6	D16Z6/D16Z7	12205PJ7305	5.5	11.06	54.0	F	G1
8155.600	IN	CIVIC V Stufenheck (EG, EH), 1.6	D16Z7	12204PJ7305	5.5	11.06	47.5	F	G1
8179.600	EX	CIVIC V Stufenheck (EG, EH), 1.6	D16Z7	12205PJ7305	5.5	11.06	54.0	F	G1
8155.600	IN	CIVIC VI Aerodeck (MB, MC), 1.4	D14A7	12204PJ7305	5.5	11.06	47.5	F	G1
8179.600	EX	CIVIC VI Aerodeck (MB, MC), 1.4	D14A7	12205PJ7305	5.5	11.06	54.0	F	G1

(D1) Internal diameter, (D2) External diameter, (B) Shape, (C) Material

VALVE GUIDES

HONDA

IVT Ref.	Type	Model	Engine	OEM Ref.	D1	D2	Length	B	C
8155.600	IN	CIVIC VI Aerodeck (MB, MC), 1.4	D14A8	12204PJ7305	5.5	11.06	47.5	F	G1
8179.600	EX	CIVIC VI Aerodeck (MB, MC), 1.4	D14A8	12205PJ7305	5.5	11.06	54.0	F	G1
8155.600	IN	CIVIC VI Aerodeck (MB, MC), 1.5	D15Z8	12204PJ7305	5.5	11.06	47.5	F	G1
8179.600	EX	CIVIC VI Aerodeck (MB, MC), 1.5	D15Z8	12205PJ7305	5.5	11.06	54.0	F	G1
8155.600	IN	CIVIC VI Aerodeck (MB, MC), 1.6	D16B2	12204PJ7305	5.5	11.06	47.5	F	G1
8179.600	EX	CIVIC VI Aerodeck (MB, MC), 1.6	D16B2	12205PJ7305	5.5	11.06	54.0	F	G1
8155.600	IN	CIVIC VI Coupe (EJ, EM1), 1.6 i	D16Y7	12204PJ7305	5.5	11.06	47.5	F	G1
8179.600	EX	CIVIC VI Coupe (EJ, EM1), 1.6 i	D16Y7	12205PJ7305	5.5	11.06	54.0	F	G1
8155.600	IN	CIVIC VI Coupe (EJ, EM1), 1.6 i V	D16Y8	12204PJ7305	5.5	11.06	47.5	F	G1
8179.600	EX	CIVIC VI Coupe (EJ, EM1), 1.6 i V	D16Y8	12205PJ7305	5.5	11.06	54.0	F	G1
8155.600	IN	CIVIC VI Fastback (MA, MB), 1.4 i	D14A5/D14A7/D14Z3	12204PJ7305	5.5	11.06	47.5	F	G1
8179.600	EX	CIVIC VI Fastback (MA, MB), 1.4 i	D14A5/D14A7/D14Z3	12205PJ7305	5.5	11.06	54.0	F	G1
8155.600	IN	CIVIC VI Fastback (MA, MB), 1.4 i	D14A8/D14Z4/D14A6/D14A2	12204PJ7305	5.5	11.06	47.5	F	G1
8179.600	EX	CIVIC VI Fastback (MA, MB), 1.4 i	D14A8/D14Z4/D14A6/D14A2	12205PJ7305	5.5	11.06	54.0	F	G1
8155.600	IN	CIVIC VI Fastback (MA, MB), 1.5	D15Z8	12204PJ7305	5.5	11.06	47.5	F	G1
8179.600	EX	CIVIC VI Fastback (MA, MB), 1.5	D15Z8	12205PJ7305	5.5	11.06	54.0	F	G1
8155.600	IN	CIVIC VI Fastback (MA, MB), 1.5 i	D15Z3	12204PJ7305	5.5	11.06	47.5	F	G1
8179.600	EX	CIVIC VI Fastback (MA, MB), 1.5 i	D15Z3	12205PJ7305	5.5	11.06	54.0	F	G1
8155.600	IN	CIVIC VI Fastback (MA, MB), 1.6	D16B2	12204PJ7305	5.5	11.06	47.5	F	G1
8179.600	EX	CIVIC VI Fastback (MA, MB), 1.6	D16B2	12205PJ7305	5.5	11.06	54.0	F	G1
8155.600	IN	CIVIC VI Fastback (MA, MB), 1.6 i	D16Y3	12204PJ7305	5.5	11.06	47.5	F	G1
8179.600	EX	CIVIC VI Fastback (MA, MB), 1.6 i	D16Y3	12205PJ7305	5.5	11.06	54.0	F	G1
8155.600	IN	CIVIC VI Fastback (MA, MB), 1.6 i	D16Y2	12204PJ7305	5.5	11.06	47.5	F	G1
8179.600	EX	CIVIC VI Fastback (MA, MB), 1.6 i	D16Y2	12205PJ7305	5.5	11.06	54.0	F	G1
8155.600	IN	CIVIC VI Hatchback (EJ, EK), 1.4	D14Z1/D14A3	12204PJ7305	5.5	11.06	47.5	F	G1
8155.600	IN	CIVIC VI Hatchback (EJ, EK), 1.4	D14A4/D14Z4/D14Z2	12204PJ7305	5.5	11.06	47.5	F	G1
8179.600	EX	CIVIC VI Hatchback (EJ, EK), 1.4	D14A4/D14Z4/D14Z2	12205PJ7305	5.5	11.06	54.0	F	G1
8155.600	IN	CIVIC VI Hatchback (EJ, EK), 1.5	D15Z6	12204PJ7305	5.5	11.06	47.5	F	G1
8179.600	EX	CIVIC VI Hatchback (EJ, EK), 1.5	D15Z6	12205PJ7305	5.5	11.06	54.0	F	G1
8155.600	IN	CIVIC VI Hatchback (EJ, EK), 1.6	D16Y5	12204PJ7305	5.5	11.06	47.5	F	G1
8179.600	EX	CIVIC VI Hatchback (EJ, EK), 1.6	D16Y5	12205PJ7305	5.5	11.06	54.0	F	G1
8155.600	IN	CIVIC VI Stufenheck (EJ, EK), 1.4	D14A4	12204PJ7305	5.5	11.06	47.5	F	G1
8155.600	IN	CIVIC VI Stufenheck (EJ, EK), 1.4	D14A4/D14Z4/D14Z2	12204PJ7305	5.5	11.06	47.5	F	G1
8179.600	EX	CIVIC VI Stufenheck (EJ, EK), 1.4	D14A4/D14Z4/D14Z2	12205PJ7305	5.5	11.06	54.0	F	G1
8155.600	IN	CIVIC VI Stufenheck (EJ, EK), 1.5	D15Z6	12204PJ7305	5.5	11.06	47.5	F	G1
8179.600	EX	CIVIC VI Stufenheck (EJ, EK), 1.5	D15Z6	12205PJ7305	5.5	11.06	54.0	F	G1
8155.600	IN	CIVIC VI Stufenheck (EJ, EK), 1.6	D16Y6/D16Y8	12204PJ7305	5.5	11.06	47.5	F	G1
8179.600	EX	CIVIC VI Stufenheck (EJ, EK), 1.6	D16Y6/D16Y8	12205PJ7305	5.5	11.06	54.0	F	G1
8155.600	IN	CIVIC VII Coupe (EM2), 1.6 i	D16V1	12204PJ7305	5.5	11.06	47.5	F	G1
8179.600	EX	CIVIC VII Coupe (EM2), 1.6 i	D16V1	12205PJ7305	5.5	11.06	54.0	F	G1
8155.600	IN	CIVIC VII Coupe (EM2), 1.7 i	D17A8	12204PJ7305	5.5	11.06	47.5	F	G1
8179.600	EX	CIVIC VII Coupe (EM2), 1.7 i	D17A8	12205PJ7305	5.5	11.06	54.0	F	G1
8155.600	IN	CIVIC VII Coupe (EM2), 1.7 i VTE	D17A5/D17A9	12204PJ7305	5.5	11.06	47.5	F	G1
8179.600	EX	CIVIC VII Coupe (EM2), 1.7 i VTE	D17A5/D17A9	12205PJ7305	5.5	11.06	54.0	F	G1
8155.600	IN	CIVIC VII Hatchback (EU, EP, EV)	D14Z6	12204PJ7305	5.5	11.06	47.5	F	G1
8155.600	IN	CIVIC VII Hatchback (EU, EP, EV)	D14Z5/D14Z6	12204PJ7305	5.5	11.06	47.5	F	G1
8155.600	IN	CIVIC VII Hatchback (EU, EP, EV)	D16V1	12204PJ7305	5.5	11.06	47.5	F	G1
8133.600	IN-EX	CIVIC VII Hatchback (EU, EP, EV)	4EE-2	12204PLZD00	6.0	11.05	42.0	F	G1
8155.600	IN	CIVIC VII Stufenheck (ES), 1.3 IM	LDA1	12204PJ7305	5.5	11.06	47.5	F	G1
8179.600	EX	CIVIC VII Stufenheck (ES), 1.3 IM	LDA1	12205PJ7305	5.5	11.06	54.0	F	G1
8155.600	IN	CIVIC VII Stufenheck (ES), 1.6	D16V1	12204PJ7305	5.5	11.06	47.5	F	G1
8179.600	EX	CIVIC VII Stufenheck (ES), 1.6	D16V1	12205PJ7305	5.5	11.06	54.0	F	G1
8155.600	IN	CIVIC VIII Hatchback (FN, FK), 1.	L13A7	12204PJ7305	5.5	11.06	47.5	F	G1
8179.600	EX	CIVIC VIII Hatchback (FN, FK), 1.	L13A7	12205PJ7305	5.5	11.06	54.0	F	G1
8155.600	IN	CIVIC VIII Hatchback (FN, FK), 1.	R18A2	12204PJ7305	5.5	11.06	47.5	F	G1
8179.600	EX	CIVIC VIII Hatchback (FN, FK), 1.	R18A2	12205PJ7305	5.5	11.06	54.0	F	G1
8155.600	IN	CIVIC VIII Stufenheck (FD, FA), 1.	LDA2	12204PJ7305	5.5	11.06	47.5	F	G1
8179.600	EX	CIVIC VIII Stufenheck (FD, FA), 1.	LDA2	12205PJ7305	5.5	11.06	54.0	F	G1
8155.600	IN	CIVIC VIII Stufenheck (FD, FA), 1.	R18A1	12204PJ7305	5.5	11.06	47.5	F	G1
8179.600	EX	CIVIC VIII Stufenheck (FD, FA), 1.	R18A1	12205PJ7305	5.5	11.06	54.0	F	G1
8179.600	EX	CONCERTO (HW), 1.4	D14A1	12205PJ7305	5.5	11.06	54.0	F	G1
8179.600	EX	CONCERTO (HW), 1.4	D14A8/D14A1	12205PJ7305	5.5	11.06	54.0	F	G1

(D1) Internal diameter, (D2) External diameter, (B) Shape, (C) Material

VALVE GUIDES

HONDA

IVT Ref.	Type	Model	Engine	OEM Ref.	D1	D2	Length	B	C
8179.600	EX	CONCERTO (HW), 1.5 i 16V	D15B2	12205PJ7305	5.5	11.06	54.0	F	G1
8179.600	EX	CONCERTO (HW), 1.6 16V	D16Z2	12205PJ7305	5.5	11.06	54.0	F	G1
8179.600	EX	CONCERTO (HW), 1.6 i 16V	D16Z2	12205PJ7305	5.5	11.06	54.0	F	G1
8155.600	IN	CONCERTO (HW, MA), 1.4	D14A1	12204PJ7305	5.5	11.06	47.5	F	G1
8155.600	IN	CONCERTO (HW, MA), 1.4	D14A8/D14A1	12204PJ7305	5.5	11.06	47.5	F	G1
8155.600	IN	CONCERTO (HW, MA), 1.5 i 16V	D15B2	12204PJ7305	5.5	11.06	47.5	F	G1
8155.600	IN	CONCERTO (HW, MA), 1.6 16V	D16Z2	12204PJ7305	5.5	11.06	47.5	F	G1
8155.600	IN	CONCERTO (HW, MA), 1.6 i 16V	D16Z2	12204PJ7305	5.5	11.06	47.5	F	G1
8155.600	IN	CONCERTO Stufenheck (HWW),	D14A1	12204PJ7305	5.5	11.06	47.5	F	G1
8179.600	EX	CONCERTO Stufenheck (HWW),	D14A1	12205PJ7305	5.5	11.06	54.0	F	G1
8155.600	IN	CONCERTO Stufenheck (HWW),	D14A8/D14A1	12204PJ7305	5.5	11.06	47.5	F	G1
8179.600	EX	CONCERTO Stufenheck (HWW),	D14A8/D14A1	12205PJ7305	5.5	11.06	54.0	F	G1
8155.600	IN	CONCERTO Stufenheck (HWW),	D15B2	12204PJ7305	5.5	11.06	47.5	F	G1
8179.600	EX	CONCERTO Stufenheck (HWW),	D15B2	12205PJ7305	5.5	11.06	54.0	F	G1
8155.600	IN	CONCERTO Stufenheck (HWW),	D16Z2	12204PJ7305	5.5	11.06	47.5	F	G1
8179.600	EX	CONCERTO Stufenheck (HWW),	D16Z2	12205PJ7305	5.5	11.06	54.0	F	G1
8155.600	IN	CONCERTO Stufenheck (HWW),	D16Z2	12204PJ7305	5.5	11.06	47.5	F	G1
8179.600	EX	CONCERTO Stufenheck (HWW),	D16Z2	12205PJ7305	5.5	11.06	54.0	F	G1
8155.600	IN	CR-V III (RE), 2.0 i 4WD	R20A2	12204PJ7305	5.5	11.06	47.5	F	G1
8179.600	EX	CR-V III (RE), 2.0 i 4WD	R20A2	12205PJ7305	5.5	11.06	54.0	F	G1
8155.600	IN	CRX II (ED, EE), 1.6 i 16V (ED9)	D16Z5	12204PJ7305	5.5	11.06	47.5	F	G1
8179.600	EX	CRX II (ED, EE), 1.6 i 16V (ED9)	D16Z5	12205PJ7305	5.5	11.06	54.0	F	G1
8155.600	IN	CRX III (EH, EG), 1.6 ESi (EH6)	D16Y8/D16Z6	12204PJ7305	5.5	11.06	47.5	F	G1
8179.600	EX	CRX III (EH, EG), 1.6 ESi (EH6)	D16Y8/D16Z6	12205PJ7305	5.5	11.06	54.0	F	G1
8155.600	IN	FR-V (BE), 1.7	D17A2	12204PJ7305	5.5	11.06	47.5	F	G1
8179.600	EX	FR-V (BE), 1.7	D17A2	12205PJ7305	5.5	11.06	54.0	F	G1
8155.600	IN	FR-V (BE), 1.8	R18A1	12204PJ7305	5.5	11.06	47.5	F	G1
8179.600	EX	FR-V (BE), 1.8	R18A1	12205PJ7305	5.5	11.06	54.0	F	G1
8155.600	IN	HR-V (GH), 1.6 16V	D16W1	12204PJ7305	5.5	11.06	47.5	F	G1
8179.600	EX	HR-V (GH), 1.6 16V	D16W1	12205PJ7305	5.5	11.06	54.0	F	G1
8155.600	IN	HR-V (GH), 1.6 16V 4WD	D16W1	12204PJ7305	5.5	11.06	47.5	F	G1
8179.600	EX	HR-V (GH), 1.6 16V 4WD	D16W1	12205PJ7305	5.5	11.06	54.0	F	G1
8155.600	IN	HR-V (GH), 1.6 16V 4WD	D16W5	12204PJ7305	5.5	11.06	47.5	F	G1
8179.600	EX	HR-V (GH), 1.6 16V 4WD	D16W5	12205PJ7305	5.5	11.06	54.0	F	G1
8155.600	IN	INSIGHT (ZE), 1.0 Hybrid	ECA1	12204PJ7305	5.5	11.06	47.5	F	G1
8179.600	EX	INSIGHT (ZE), 1.0 Hybrid	ECA1	12205PJ7305	5.5	11.06	54.0	F	G1
8155.600	IN	INTEGRA (DA), 1.6 (DA1, DA3)	D16A3	12204PJ7305	5.5	11.06	47.5	F	G1
8179.600	EX	INTEGRA (DA), 1.6 (DA1, DA3)	D16A3	12205PJ7305	5.5	11.06	54.0	F	G1
8155.600	IN	JAZZ II (GD), 1.2	L12A1	12204PJ7305	5.5	11.06	47.5	F	G1
8179.600	EX	JAZZ II (GD), 1.2	L12A1	12205PJ7305	5.5	11.06	54.0	F	G1
8155.600	IN	JAZZ II (GD), 1.3	L13A1	12204PJ7305	5.5	11.06	47.5	F	G1
8179.600	EX	JAZZ II (GD), 1.3	L13A1	12205PJ7305	5.5	11.06	54.0	F	G1
8155.600	IN	JAZZ III (GE), 1.2	L12B1	12204PJ7305	5.5	11.06	47.5	F	G1
8179.600	EX	JAZZ III (GE), 1.2	L12B1	12205PJ7305	5.5	11.06	54.0	F	G1
8155.600	IN	JAZZ III (GE), 1.3 HYBRID	LDA3	12204PJ7305	5.5	11.06	47.5	F	G1
8179.600	EX	JAZZ III (GE), 1.3 HYBRID	LDA3	12205PJ7305	5.5	11.06	54.0	F	G1
8155.600	IN	JAZZ III (GE), 1.3 i	L13Z1	12204PJ7305	5.5	11.06	47.5	F	G1
8179.600	EX	JAZZ III (GE), 1.3 i	L13Z1	12205PJ7305	5.5	11.06	54.0	F	G1
8155.600	IN	LEGEND II (KA7), 3.2 i 24V	C32A2	12204PJ7305	5.5	11.06	47.5	F	G1
8179.600	EX	LEGEND II (KA7), 3.2 i 24V	C32A2	12205PJ7305	5.5	11.06	54.0	F	G1
8155.600	IN	LEGEND II Coupe (KA8), 3.2 i 24	C32A2	12204PJ7305	5.5	11.06	47.5	F	G1
8179.600	EX	LEGEND II Coupe (KA8), 3.2 i 24	C32A2	12205PJ7305	5.5	11.06	54.0	F	G1
8155.600	IN	LEGEND III (KA9), 3.5 i 24V	C35A2	12204PJ7305	5.5	11.06	47.5	F	G1
8179.600	EX	LEGEND III (KA9), 3.5 i 24V	C35A2	12205PJ7305	5.5	11.06	54.0	F	G1
8155.600	IN	LOGO (GA3), 1.3	D13B7	12204PJ7305	5.5	11.06	47.5	F	G1
8155.600	IN	PRELUDE IV (BB), 2.0 i 16V (BB3	F20A4	12204PJ7305	5.5	11.06	47.5	F	G1
8179.600	EX	PRELUDE IV (BB), 2.0 i 16V (BB3	F20A4	12205PJ7305	5.5	11.06	54.0	F	G1
8155.600	IN	PRELUDE V (BB), 2.0 16V (BB9)	F20A4	12204PJ7305	5.5	11.06	47.5	F	G1
8179.600	EX	PRELUDE V (BB), 2.0 16V (BB9)	F20A4	12205PJ7305	5.5	11.06	54.0	F	G1
8155.600	IN	SHUTTLE (RA), 2.2 16V	F22B8	12204PJ7305	5.5	11.06	47.5	F	G1
8179.600	EX	SHUTTLE (RA), 2.2 16V	F22B8	12205PJ7305	5.5	11.06	54.0	F	G1
8155.600	IN	SHUTTLE (RA), 2.3 16V	F23A7	12204PJ7305	5.5	11.06	47.5	F	G1

(D1) Internal diameter, (D2) External diameter, (B) Shape, (C) Material

VALVE GUIDES

IVT Ref.	Type	Model	Engine	OEM Ref.	D1	D2	Length	B	C
HONDA									
8179.600	EX	SHUTTLE (RA), 2.3 16V	F23A7	12205PJ7305	5.5	11.06	54.0	F	G1
8155.600	IN	STREAM (RN), 1.7 16V	D17A2	12204PJ7305	5.5	11.06	47.5	F	G1
8179.600	EX	STREAM (RN), 1.7 16V	D17A2	12205PJ7305	5.5	11.06	54.0	F	G1
HYUNDAI									
8138.904	EX	ACCENT I (X-3), 1.3	G4EH	2211522905	6.0	11.1	39.0	P	S03
8138.904	EX	ACCENT I (X-3), 1.3	G4EH	2211522905	6.0	11.1	39.0	P	S03
8138.904	EX	ACCENT I (X-3), 1.3 i 12V	G4EH	2211522905	6.0	11.1	39.0	P	S03
8138.904	EX	ACCENT I (X-3), 1.5 i 12V	G4EK	2211522905	6.0	11.1	39.0	P	S03
8125.905	EX	ACCENT II (LC), 1.5	G4EC-G	2211526000	6.0	11.06	41.0	P-6	S03
8132.904	IN-EX	ACCENT II (LC), 1.5 CRDi	D3EA	2211427000	6.0	11.05	36.6	P	S03
8125.905	EX	ACCENT II (LC), 1.6	G4ED-G	2211526000	6.0	11.06	41.0	P-6	S03
8132.904	IN-EX	ACCENT II Stufenheck (LC), 1.5	D3EA	2211427000	6.0	11.05	36.6	P	S03
8125.905	EX	ACCENT II Stufenheck (LC), 1.6	G4ED-G	2211526000	6.0	11.06	41.0	P-6	S03
8125.905	EX	ACCENT III (MC), 1.4 GL	G4EE	2211526000	6.0	11.06	41.0	P-6	S03
8150.604	IN	ACCENT III (MC), 1.5 CRDi GLS	D4FA	221142A000	5.5	11.05	31.5	F	S03
8125.905	EX	ACCENT III Stufenheck (MC), 1.4	G4EE	2211526000	6.0	11.06	41.0	P-6	S03
8150.604	IN	ACCENT III Stufenheck (MC), 1.5	D4FA	221142A000	5.5	11.05	31.5	F	S03
8150.604	IN	ACCENT IV Stufenheck (RB), 1.6	D4FB	221142A000	5.5	11.05	31.5	F	S03
8138.904	EX	ACCENT Stufenheck (X-3), 1.3	G4EH	2211522905	6.0	11.1	39.0	P	S03
8138.904	EX	ACCENT Stufenheck (X-3), 1.3	G4EH	2211522905	6.0	11.1	39.0	P	S03
8138.904	EX	ACCENT Stufenheck (X-3), 1.3 i 1	G4EH	2211522905	6.0	11.1	39.0	P	S03
8138.904	EX	ACCENT Stufenheck (X-3), 1.5 i 1	G4EK	2211522905	6.0	11.1	39.0	P	S03
8151.904	IN	ATOS (MX), 1.0 i	G4HC	2211402500	5.5	10.05	47.0	P	S03
8206.904	EX	ATOS (MX), 1.0 i	G4HC	2211502500	5.5	10.05	48.0	P-6	S03
8151.904	IN	ATOS (MX), 1.0 i	G4HC-E	2211402500	5.5	10.05	47.0	P	S03
8206.904	EX	ATOS (MX), 1.0 i	G4HC-E	2211502500	5.5	10.05	48.0	P-6	S03
8151.904	IN	ATOS (MX), 1.1	G4HG	2211402500	5.5	10.05	47.0	P	S03
8206.904	EX	ATOS (MX), 1.1	G4HG	2211502500	5.5	10.05	48.0	P-6	S03
8151.904	IN	ATOS PRIME (MX), 1.0 i	G4HC	2211402500	5.5	10.05	47.0	P	S03
8206.904	EX	ATOS PRIME (MX), 1.0 i	G4HC	2211502500	5.5	10.05	48.0	P-6	S03
8151.904	IN	ATOS PRIME (MX), 1.0 i	G4HC-E	2211402500	5.5	10.05	47.0	P	S03
8206.904	EX	ATOS PRIME (MX), 1.0 i	G4HC-E	2211502500	5.5	10.05	48.0	P-6	S03
8151.904	IN	ATOS PRIME (MX), 1.1	G4HD	2211402500	5.5	10.05	47.0	P	S03
8206.904	EX	ATOS PRIME (MX), 1.1	G4HD	2211502500	5.5	10.05	48.0	P-6	S03
8151.904	IN	ATOS PRIME (MX), 1.1	G4HG	2211402500	5.5	10.05	47.0	P	S03
8206.904	EX	ATOS PRIME (MX), 1.1	G4HG	2211502500	5.5	10.05	48.0	P-6	S03
8125.905	EX	COUPE (GK), 1.6 16V	G4ED-G	2211526000	6.0	11.06	41.0	P-6	S03
8125.905	EX	COUPE (GK), 1.6 16V	G4ED-G	2211526000	6.0	11.06	41.0	P-6	S03
8125.905	EX	ELANTRA (XD), 1.6	G4ED-G	2211526000	6.0	11.06	41.0	P-6	S03
8125.905	EX	ELANTRA (XD), 1.6	G4ED-G	2211526000	6.0	11.06	41.0	P-6	S03
8132.904	IN-EX	ELANTRA (XD), 2.0 CRDi	D4EA	2211427000	6.0	11.05	36.6	P	S03
8125.905	EX	ELANTRA Stufenheck (XD), 1.6	G4ED-G	2211526000	6.0	11.06	41.0	P-6	S03
8125.905	EX	ELANTRA Stufenheck (XD), 1.6	G4ED-G	2211526000	6.0	11.06	41.0	P-6	S03
8132.904	IN-EX	ELANTRA Stufenheck (XD), 2.0 C	D4EA	2211427000	6.0	11.05	36.6	P	S03
8151.904	IN	GETZ (TB), 1.1	G4HD	2211402500	5.5	10.05	47.0	P	S03
8206.904	EX	GETZ (TB), 1.1	G4HD	2211502500	5.5	10.05	48.0	P-6	S03
8151.904	IN	GETZ (TB), 1.1	G4HG/G4HD	2211402500	5.5	10.05	47.0	P	S03
8206.904	EX	GETZ (TB), 1.1	G4HG/G4HD	2211502500	5.5	10.05	48.0	P-6	S03
8125.905	EX	GETZ (TB), 1.4 i	G4EE	2211526000	6.0	11.06	41.0	P-6	S03
8132.904	IN-EX	GETZ (TB), 1.5 CRDi	D3EA	2211427000	6.0	11.05	36.6	P	S03
8150.604	IN	GETZ (TB), 1.5 CRDi	D4FA	221142A000	5.5	11.05	31.5	F	S03
8150.604	IN	GETZ (TB), 1.5 CRDi GLS	D4FA	221142A000	5.5	11.05	31.5	F	S03
8125.905	EX	GETZ (TB), 1.6	G4ED-G	2211526000	6.0	11.06	41.0	P-6	S03
8125.905	EX	GETZ (TB), 1.6	G4ED-G	2211526000	6.0	11.06	41.0	P-6	S03
8210.604	IN-EX	GRAND SANTA FÉ, 2.2 CRDi Allr	D4HB	221192F000	5.9	11.05	46.5	F	S03
8132.904	IN-EX	GRANDEUR (TG), 2.2 CRDi	D4EB	2211427000	6.0	11.05	36.6	P	S03
8132.904	IN-EX	GRANDEUR (TG), 2.2 CRDi	D4EB	2211427000	6.0	11.05	36.6	P	S03
8151.904	IN	i10 (PA), 1.1	G4HG	2211402500	5.5	10.05	47.0	P	S03
8151.904	IN	i10 (PA), 1.1	G4HG	2211402500	5.5	10.05	47.0	P	S03
8206.904	EX	i10 (PA), 1.1	G4HG	2211502500	5.5	10.05	48.0	P-6	S03
8206.904	EX	i10 (PA), 1.1	G4HG	2211502500	5.5	10.05	48.0	P-6	S03

(D1) Internal diameter, (D2) External diameter, (B) Shape, (C) Material

VALVE GUIDES

IVT Ref.	Type	Model	Engine	OEM Ref.	D1	D2	Length	B	C
HYUNDAI									
8150.604	IN	i10 (PA), 1.1 CRDi	D3FA	221142A000	5.5	11.05	31.5	F	S03
8151.904	IN	i10 (PA), 1.2	G4LA	2211402500	5.5	10.05	47.0	P	S03
8151.904	IN	i10 (PA), 1.2	G4LA	2211402500	5.5	10.05	47.0	P	S03
8206.904	EX	i10 (PA), 1.2	G4LA	2211502500	5.5	10.05	48.0	P-6	S03
8206.904	EX	i10 (PA), 1.2	G4LA	2211502500	5.5	10.05	48.0	P-6	S03
8150.604	IN	i20 (PB, PBT), 1.1 CRDi	D3FA	221142A000	5.5	11.05	31.5	F	S03
8151.904	IN	i20 (PB, PBT), 1.2	G4LA	2211402500	5.5	10.05	47.0	P	S03
8151.904	IN	i20 (PB, PBT), 1.2	G4LA	2211402500	5.5	10.05	47.0	P	S03
8206.904	EX	i20 (PB, PBT), 1.2	G4LA	2211502500	5.5	10.05	48.0	P-6	S03
8206.904	EX	i20 (PB, PBT), 1.2	G4LA	2211502500	5.5	10.05	48.0	P-6	S03
8181.904	IN-EX	i20 (PB, PBT), 1.4	G4FA	221142B000	5.5	10.05	40.5	P	S03
8150.604	IN	i20 (PB, PBT), 1.4 CRDi	D4FC	221142A000	5.5	11.05	31.5	F	S03
8150.604	IN	i20 (PB, PBT), 1.4 CRDi	D4FC	221142A000	5.5	11.05	31.5	F	S03
8181.904	IN-EX	i20 (PB, PBT), 1.6	G4FC	221142B000	5.5	10.05	40.5	P	S03
8150.604	IN	i20 (PB, PBT), 1.6 CRDi	D4FB	221142A000	5.5	11.05	31.5	F	S03
8181.904	IN-EX	i30 (FD), 1.4	G4FA	221142B000	5.5	10.05	40.5	P	S03
8181.904	IN-EX	i30 (FD), 1.4	G4FA	221142B000	5.5	10.05	40.5	P	S03
8181.904	IN-EX	i30 (FD), 1.6	G4FC	221142B000	5.5	10.05	40.5	P	S03
8181.904	IN-EX	i30 (FD), 1.6	G4FC	221142B000	5.5	10.05	40.5	P	S03
8181.904	IN-EX	i30 (FD), 1.6	G4FC	221142B000	5.5	10.05	40.5	P	S03
8150.604	IN	i30 (FD), 1.6 CRDi	D4FB	221142A000	5.5	11.05	31.5	F	S03
8150.604	IN	i30 (FD), 1.6 CRDi	D4FB	221142A000	5.5	11.05	31.5	F	S03
8132.904	IN-EX	i30 (FD), 2.0 CRDi	D4EA	2211427000	6.0	11.05	36.6	P	S03
8132.904	IN-EX	i30 (FD), 2.0 CRDi	D4EA	2211427000	6.0	11.05	36.6	P	S03
8181.904	IN-EX	i30 (GD), 1.4	G4FA	221142B000	5.5	10.05	40.5	P	S03
8150.604	IN	i30 (GD), 1.4 CRDi	D4FC	221142A000	5.5	11.05	31.5	F	S03
8181.904	IN-EX	i30 (GD), 1.6	G4FC	221142B000	5.5	10.05	40.5	P	S03
8150.604	IN	i30 (GD), 1.6 CRDi	D4FB	221142A000	5.5	11.05	31.5	F	S03
8181.904	IN-EX	i30 (GD), 1.6 GDI	G4FD	221142B000	5.5	10.05	40.5	P	S03
8181.904	IN-EX	i30 Coupe, 1.4	G4FA	221142B000	5.5	10.05	40.5	P	S03
8150.604	IN	i30 Coupe, 1.4 CRDi	D4FC	221142A000	5.5	11.05	31.5	F	S03
8150.604	IN	i30 Coupe, 1.6 CRDi	D4FB	221142A000	5.5	11.05	31.5	F	S03
8181.904	IN-EX	i30 Coupe, 1.6 GDI	G4FD	221142B000	5.5	10.05	40.5	P	S03
8181.904	IN-EX	i30 CW (FD), 1.4	G4FA	221142B000	5.5	10.05	40.5	P	S03
8181.904	IN-EX	i30 CW (FD), 1.4	G4FA	221142B000	5.5	10.05	40.5	P	S03
8181.904	IN-EX	i30 CW (FD), 1.6	G4FC	221142B000	5.5	10.05	40.5	P	S03
8181.904	IN-EX	i30 CW (FD), 1.6	G4FC	221142B000	5.5	10.05	40.5	P	S03
8150.604	IN	i30 CW (FD), 1.6 CRDi	D4FB	221142A000	5.5	11.05	31.5	F	S03
8150.604	IN	i30 CW (FD), 1.6 CRDi	D4FB	221142A000	5.5	11.05	31.5	F	S03
8132.904	IN-EX	i30 CW (FD), 2.0 CRDi	D4EA	2211427000	6.0	11.05	36.6	P	S03
8132.904	IN-EX	i30 CW (FD), 2.0 CRDi	D4EA	2211427000	6.0	11.05	36.6	P	S03
8181.904	IN-EX	i30 CW (GD), 1.4	G4FA	221142B000	5.5	10.05	40.5	P	S03
8150.604	IN	i30 CW (GD), 1.4 CRDi	D4FC	221142A000	5.5	11.05	31.5	F	S03
8181.904	IN-EX	i30 CW (GD), 1.6	G4FG	221142B000	5.5	10.05	40.5	P	S03
8150.604	IN	i30 CW (GD), 1.6 CRDi	D4FB	221142A000	5.5	11.05	31.5	F	S03
8150.604	IN	i30 CW (GD), 1.6 CRDi	D4FB-5P	221142A000	5.5	11.05	31.5	F	S03
8181.904	IN-EX	i30 CW (GD), 1.6 GDI	G4FD	221142B000	5.5	10.05	40.5	P	S03
8181.904	IN-EX	i40 (VF), 1.6 GDI	G4FD	221142B000	5.5	10.05	40.5	P	S03
8150.604	IN	i40 (VF), 1.7 CRDi	D4FD	221142A000	5.5	11.05	31.5	F	S03
8150.604	IN	i40 (VF), 1.7 CRDi	D4FD	221142A000	5.5	11.05	31.5	F	S03
8181.904	IN-EX	i40 CW (VF), 1.6 GDI	G4FD	221142B000	5.5	10.05	40.5	P	S03
8150.604	IN	i40 CW (VF), 1.7 CRDi	D4FD	221142A000	5.5	11.05	31.5	F	S03
8150.604	IN	i40 CW (VF), 1.7 CRDi	D4FD	221142A000	5.5	11.05	31.5	F	S03
8181.904	IN-EX	ix20 (JC), 1.4	G4FA	221142B000	5.5	10.05	40.5	P	S03
8150.604	IN	ix20 (JC), 1.4 CRDi	D4FC	221142A000	5.5	11.05	31.5	F	S03
8150.604	IN	ix20 (JC), 1.4 CRDi	D4FC-M	221142A000	5.5	11.05	31.5	F	S03
8181.904	IN-EX	ix20 (JC), 1.6	G4FC	221142B000	5.5	10.05	40.5	P	S03
8150.604	IN	ix20 (JC), 1.6 CRDI	D4FB	221142A000	5.5	11.05	31.5	F	S03
8150.604	IN	ix20 (JC), 1.6 CRDI	D4FB	221142A000	5.5	11.05	31.5	F	S03
8181.904	IN-EX	ix35 (LM, EL, ELH), 1.6	G4FD	221142B000	5.5	10.05	40.5	P	S03
8150.604	IN	ix35 (LM, EL, ELH), 1.7 CRDi	D4FD	221142A000	5.5	11.05	31.5	F	S03
8210.604	IN-EX	ix35 (LM, EL, ELH), 2.0 CRDi	D4HA	221192F000	5.9	11.05	46.5	F	S03

(D1) Internal diameter, (D2) External diameter, (B) Shape, (C) Material

VALVE GUIDES

IVT Ref.	Type	Model	Engine	OEM Ref.	D1	D2	Length	B	C
HYUNDAI									
8210.604	IN-EX	ix35 (LM, EL, ELH), 2.0 CRDi	D4HA	221192F000	5.9	11.05	46.5	F	S03
8210.604	IN-EX	ix35 (LM, EL, ELH), 2.0 CRDi 4W	D4HA	221192F000	5.9	11.05	46.5	F	S03
8210.604	IN-EX	ix35 (LM, EL, ELH), 2.0 CRDi 4W	D4HA	221192F000	5.9	11.05	46.5	F	S03
8132.904	IN-EX	ix55, 3.0 V6 CRDi 4WD	D6EA	2211427000	6.0	11.05	36.6	P	S03
8132.904	IN-EX	ix55, 3.0 V6 CRDi 4WD	D6EB	2211427000	6.0	11.05	36.6	P	S03
8144.600	EX	LANTRA I (J-1), 1.5 i.e.	G15B/G4DJ		6.6	12.04	49.5	F-6	G1
8139.904	IN	LANTRA I (J-1), 1.8 i.e. 16V	G4CN	2211433911	6.6	12.1	45.5	P	S03
8138.904	EX	LANTRA II (J-2), 1.5 12V	G4EK	2211522905	6.0	11.1	39.0	P	S03
8178.601	IN-EX	LANTRA II (J-2), 1.9 D	DJY		8.0	14.05	48.0	F	B
8138.904	EX	LANTRA II Wagon (J-2), 1.5 12V	G4EK	2211522905	6.0	11.1	39.0	P	S03
8178.601	IN-EX	LANTRA II Wagon (J-2), 1.9 D	XUD7T		8.0	14.05	48.0	F	B
8132.904	IN-EX	MATRIX (FC), 1.5 CRDi	D3EA	2211427000	6.0	11.05	36.6	P	S03
8150.604	IN	MATRIX (FC), 1.5 CRDi	D4FA	221142A000	5.5	11.05	31.5	F	S03
8150.604	IN	MATRIX (FC), 1.5 CRDi VGT	D4FA	221142A000	5.5	11.05	31.5	F	S03
8125.905	EX	MATRIX (FC), 1.6	G4ED-G	2211526000	6.0	11.06	41.0	P-6	S03
8206.904	EX	PICANTO (BA), 1.0	G4HE	2211502500	5.5	10.05	48.0	P-6	S03
8206.904	EX	PICANTO (BA), 1.0	G4HE	2211502500	5.5	10.05	48.0	P-6	S03
8206.904	EX	PICANTO (BA), 1.1	G4HG	2211502500	5.5	10.05	48.0	P-6	S03
8144.600	EX	PONY (X-2), 1.3	G4DG		6.6	12.04	49.5	F-6	G1
8144.600	EX	PONY (X-2), 1.5	G15B/G4DJ		6.6	12.04	49.5	F-6	G1
8144.600	EX	PONY (X-2), 1.5 i	G15B/G4DJ		6.6	12.04	49.5	F-6	G1
8144.600	EX	PONY (X-2), 1.5 i	G15B/G4DJ		6.6	12.04	49.5	F-6	G1
8144.600	EX	PONY / EXCEL Stufenheck (X-2),	G4DG		6.6	12.04	49.5	F-6	G1
8144.600	EX	PONY / EXCEL Stufenheck (X-2),	G15B/G4DJ		6.6	12.04	49.5	F-6	G1
8144.600	EX	PONY / EXCEL Stufenheck (X-2),	G15B/G4DJ		6.6	12.04	49.5	F-6	G1
8144.600	EX	PONY / EXCEL Stufenheck (X-2),	G15B/G4DJ		6.6	12.04	49.5	F-6	G1
8144.600	EX	PONY Stufenheck (X-1), 1.5	G15B/G4DJ		6.6	12.04	49.5	F-6	G1
8144.600	EX	S COUPE (SLC), 1.5 i	G15B/G4DJ		6.6	12.04	49.5	F-6	G1
8138.904	EX	S COUPE (SLC), 1.5 i	G4EK	2211522905	6.0	11.1	39.0	P	S03
8132.904	IN-EX	SANTA FÉ I (SM), 2.0 CRDi	D4EA	2211427000	6.0	11.05	36.6	P	S03
8132.904	IN-EX	SANTA FÉ I (SM), 2.0 CRDi 4x4	D4EA	2211427000	6.0	11.05	36.6	P	S03
8132.904	IN-EX	SANTA FÉ I (SM), 2.0 CRDi 4x4	D4EA	2211427000	6.0	11.05	36.6	P	S03
8210.604	IN-EX	SANTA FÉ II (CM), 2.0 CRDi	D4HA	221192F000	5.9	11.05	46.5	F	S03
8210.604	IN-EX	SANTA FÉ II (CM), 2.0 CRDi 4x4	D4HA	221192F000	5.9	11.05	46.5	F	S03
8132.904	IN-EX	SANTA FÉ II (CM), 2.2 CRDi	D4EB	2211427000	6.0	11.05	36.6	P	S03
8132.904	IN-EX	SANTA FÉ II (CM), 2.2 CRDi	D4EB	2211427000	6.0	11.05	36.6	P	S03
8210.604	IN-EX	SANTA FÉ II (CM), 2.2 CRDi	D4HB	221192F000	5.9	11.05	46.5	F	S03
8132.904	IN-EX	SANTA FÉ II (CM), 2.2 CRDi 4x4	D4EB	2211427000	6.0	11.05	36.6	P	S03
8132.904	IN-EX	SANTA FÉ II (CM), 2.2 CRDi 4x4	D4EB	2211427000	6.0	11.05	36.6	P	S03
8210.604	IN-EX	SANTA FÉ II (CM), 2.2 CRDi 4x4	D4HB	221192F000	5.9	11.05	46.5	F	S03
8132.904	IN-EX	SANTA FÉ II (CM), 2.2 CRDi GLS	D4EB	2211427000	6.0	11.05	36.6	P	S03
8132.904	IN-EX	SANTA FÉ II (CM), 2.2 CRDi GLS	D4EB	2211427000	6.0	11.05	36.6	P	S03
8210.604	IN-EX	SANTA FÉ III (DM), 2.0 CRDi	D4HA	221192F000	5.9	11.05	46.5	F	S03
8210.604	IN-EX	SANTA FÉ III (DM), 2.0 CRDi 4W	D4HA	221192F000	5.9	11.05	46.5	F	S03
8210.604	IN-EX	SANTA FÉ III (DM), 2.2 CRDi	D4HB	221192F000	5.9	11.05	46.5	F	S03
8210.604	IN-EX	SANTA FÉ III (DM), 2.2 CRDi 4W	D4HB	221192F000	5.9	11.05	46.5	F	S03
8139.904	IN	SONATA III (Y-3), 2.0 i	G4CP	2211433911	6.6	12.1	45.5	P	S03
8144.600	EX	SONATA IV (EF), 2.4 16V	G4BS		6.6	12.04	49.5	F-6	G1
8132.904	IN-EX	SONATA V (NF), 2.0 CRDi	D4EA	2211427000	6.0	11.05	36.6	P	S03
8132.904	IN-EX	SONATA V (NF), 2.0 CRDi	D4EA	2211427000	6.0	11.05	36.6	P	S03
8132.904	IN-EX	SONATA V (NF), 2.0 CRDi	D4EA	2211427000	6.0	11.05	36.6	P	S03
8139.904	IN	TERRACAN (HP), 3.5 i V6 4WD	G6CU	2211433911	6.6	12.1	45.5	P	S03
8132.904	IN-EX	TRAJET (FO), 2.0 CRDi	D4EA	2211427000	6.0	11.05	36.6	P	S03
8132.904	IN-EX	TUCSON (JM), 2.0 CRDi	D4EA	2211427000	6.0	11.05	36.6	P	S03
8132.904	IN-EX	TUCSON (JM), 2.0 CRDi	D4EA	2211427000	6.0	11.05	36.6	P	S03
8132.904	IN-EX	TUCSON (JM), 2.0 CRDi	D4EA	2211427000	6.0	11.05	36.6	P	S03
8132.904	IN-EX	TUCSON (JM), 2.0 CRDi	D4EA-V	2211427000	6.0	11.05	36.6	P	S03
8132.904	IN-EX	TUCSON (JM), 2.0 CRDi Allrad	D4EA	2211427000	6.0	11.05	36.6	P	S03
8132.904	IN-EX	TUCSON (JM), 2.0 CRDi Allrad	D4EA	2211427000	6.0	11.05	36.6	P	S03
8132.904	IN-EX	TUCSON (JM), 2.0 CRDi Allrad	D4EA	2211427000	6.0	11.05	36.6	P	S03
8132.904	IN-EX	TUCSON (JM), 2.0 CRDi Allrad	D4EA-V/D4EA-F	2211427000	6.0	11.05	36.6	P	S03
8181.904	IN-EX	VELOSTER (FS), 1.6 GDI	G4FD	221142B000	5.5	10.05	40.5	P	S03

(D1) Internal diameter, (D2) External diameter, (B) Shape, (C) Material

VALVE GUIDES

IVT Ref.	Type	Model	Engine	OEM Ref.	D1	D2	Length	B	C
HYUNDAI									
8181.904	IN-EX	VELOSTER (FS), 1.6 T-GDI	G4FJ	221142B000	5.5	10.05	40.5	P	S03
INNOCENTI									
8146.600	IN-EX	ELBA (146), 1.4 i.e. (146EN, 146E	146 C5.000/146 D5.000		8.0	14.06	46.5	F	G
8146.600	IN-EX	ELBA (146), 1.5 i.e. (146C9)	149 C1.000		8.0	14.06	46.5	F	G
8146.600	IN-EX	ELBA (146), 1.6 i.e. (146EO, 146E	146 D6.000/146 C6.000		8.0	14.06	46.5	F	G
8146.600	IN-EX	ELBA (146), 1.7 D (146DI, 146EI)	146 B2.000		8.0	14.06	46.5	F	G
ISUZU									
8148.100	IN-EX	MIDI Bus (94000, 98000), 2.2 D (9	4FD1	11721015	8.0	12.03	60.0	A-1	G
8148.100	IN-EX	MIDI Bus (94000, 98000), 2.2 D 4	4FD1	11721015	8.0	12.03	60.0	A-1	G
8148.100	IN-EX	MIDI Kasten (98000N), 2.2 D	4FD1	11721015	8.0	12.03	60.0	A-1	G
8148.100	IN-EX	MIDI Kasten (98000N), 2.2 D 4W	4FD1	11721015	8.0	12.03	60.0	A-1	G
8148.100	IN-EX	MIDI Van (94000, 98000), 2.2 D (9	4FD1	11721015	8.0	12.03	60.0	A-1	G
8148.100	IN-EX	MIDI Van (94000, 98000), 2.2 D 4	4FD1	11721015	8.0	12.03	60.0	A-1	G
IVECO									
8095.600	IN-EX	Daily I 30-8	8140.61.200	4749395	8.0	13.03	56.0	F	G1
8095.600	IN-EX	Daily I 30-8	8140.61.201	4749395	8.0	13.03	56.0	F	G1
8095.600	IN-EX	Daily I 30-8	8140.61.202	4749395	8.0	13.03	56.0	F	G1
8095.600	IN-EX	Daily I 30-8	8140.61.203	4749395	8.0	13.03	56.0	F	G1
8095.600	IN-EX	Daily I 30-8	8140.61.207	4749395	8.0	13.03	56.0	F	G1
8095.600	IN-EX	Daily I 30-8	8140.61.212	4749395	8.0	13.03	56.0	F	G1
8095.600	IN-EX	Daily I 30-8	8140.61.217	4749395	8.0	13.03	56.0	F	G1
8095.600	IN-EX	Daily I 30-8	8140.61.303	4749395	8.0	13.03	56.0	F	G1
8095.600	IN-EX	Daily I 35-10	8140.21.200	4749395	8.0	13.03	56.0	F	G1
8095.600	IN-EX	Daily I 35-10	8140.27S.3781	4749395	8.0	13.03	56.0	F	G1
8095.600	IN-EX	Daily I 35-8	8140.61.200	4749395	8.0	13.03	56.0	F	G1
8095.600	IN-EX	Daily I 35-8	8140.61.201	4749395	8.0	13.03	56.0	F	G1
8095.600	IN-EX	Daily I 35-8	8140.61.202	4749395	8.0	13.03	56.0	F	G1
8095.600	IN-EX	Daily I 35-8	8140.61.203	4749395	8.0	13.03	56.0	F	G1
8095.600	IN-EX	Daily I 35-8	8140.61.207	4749395	8.0	13.03	56.0	F	G1
8095.600	IN-EX	Daily I 35-8	8140.61.212	4749395	8.0	13.03	56.0	F	G1
8095.600	IN-EX	Daily I 35-8	8140.61.217	4749395	8.0	13.03	56.0	F	G1
8095.600	IN-EX	Daily I 35-8	8140.61.303	4749395	8.0	13.03	56.0	F	G1
8095.600	IN-EX	Daily I 40-10 V	8140.27.2101	4749395	8.0	13.03	56.0	F	G1
8095.600	IN-EX	Daily I 40-10 V	8140.27S.3800	4749395	8.0	13.03	56.0	F	G1
8095.600	IN-EX	Daily I 40-8 V	8140.61.200	4749395	8.0	13.03	56.0	F	G1
8095.600	IN-EX	Daily I 40-8 V	8140.61.201	4749395	8.0	13.03	56.0	F	G1
8095.600	IN-EX	Daily I 40-8 V	8140.61.202	4749395	8.0	13.03	56.0	F	G1
8095.600	IN-EX	Daily I 40-8 V	8140.61.203	4749395	8.0	13.03	56.0	F	G1
8095.600	IN-EX	Daily I 40-8 V	8140.61.207	4749395	8.0	13.03	56.0	F	G1
8095.600	IN-EX	Daily I 40-8 V	8140.61.212	4749395	8.0	13.03	56.0	F	G1
8095.600	IN-EX	Daily I 40-8 V	8140.61.217	4749395	8.0	13.03	56.0	F	G1
8095.600	IN-EX	Daily I 40-8 V	8140.61.303	4749395	8.0	13.03	56.0	F	G1
8095.600	IN-EX	Daily I 45-10 V	8140.21.200	4749395	8.0	13.03	56.0	F	G1
8095.600	IN-EX	Daily I 49-10 V	8140.21.200	4749395	8.0	13.03	56.0	F	G1
8095.600	IN-EX	Daily I 49-10 V	8140.27S.3781	4749395	8.0	13.03	56.0	F	G1
8141.100	IN-EX	DAILY I Kasten/Kombi, 30-8 (1001	8140.61.200	4726483	8.0	13.03	60.0	A	G1
8141.100	IN-EX	DAILY I Kasten/Kombi, 35-10 (103	8140.21.200	4726483	8.0	13.03	60.0	A	G1
8141.100	IN-EX	DAILY I Kasten/Kombi, 35-8 (1003	8140.61.200	4726483	8.0	13.03	60.0	A	G1
8141.100	IN-EX	DAILY I Kasten/Kombi, 40-10 V	8140.27 S	4726483	8.0	13.03	60.0	A	G1
8141.100	IN-EX	DAILY I Kasten/Kombi, 40-8 V	8140.61.200	4726483	8.0	13.03	60.0	A	G1
8141.100	IN-EX	DAILY I Kasten/Kombi, 45-10 V (1	8140.21.200	4726483	8.0	13.03	60.0	A	G1
8141.100	IN-EX	DAILY I Pritsche/Fahrgestell, 30-8	8140.61.200	4726483	8.0	13.03	60.0	A	G1
8141.100	IN-EX	DAILY I Pritsche/Fahrgestell, 35-1	8140.21.200	4726483	8.0	13.03	60.0	A	G1
8141.100	IN-EX	DAILY I Pritsche/Fahrgestell, 35-8	8140.61.200	4726483	8.0	13.03	60.0	A	G1
8141.100	IN-EX	DAILY I Pritsche/Fahrgestell, 40-1	8140.27 S	4726483	8.0	13.03	60.0	A	G1
8141.100	IN-EX	DAILY I Pritsche/Fahrgestell, 40-8	8140.61.200	4726483	8.0	13.03	60.0	A	G1
8141.100	IN-EX	DAILY I Pritsche/Fahrgestell, 45-1	8140.21.200	4726483	8.0	13.03	60.0	A	G1
8095.600	IN-EX	Daily II 30-10	8140.23.3711	4749395	8.0	13.03	56.0	F	G1
8095.600	IN-EX	Daily II 30-10	8140.23.3720	4749395	8.0	13.03	56.0	F	G1

(D1) Internal diameter, (D2) External diameter, (B) Shape, (C) Material

VALVE GUIDES

IVECO

IVT Ref.	Type	Model	Engine	OEM Ref.	D1	D2	Length	B	C
8095.600	IN-EX	Daily II 30-10	8140.23.3721	4749395	8.0	13.03	56.0	F	G1
8095.600	IN-EX	Daily II 30-10	8140.23.3730	4749395	8.0	13.03	56.0	F	G1
8095.600	IN-EX	Daily II 30-10	8140.23.3731	4749395	8.0	13.03	56.0	F	G1
8095.600	IN-EX	Daily II 30-10	8140.23.3750	4749395	8.0	13.03	56.0	F	G1
8095.600	IN-EX	Daily II 30-10	8140.23.3760	4749395	8.0	13.03	56.0	F	G1
8095.600	IN-EX	Daily II 30-10	8140.23.3761	4749395	8.0	13.03	56.0	F	G1
8095.600	IN-EX	Daily II 30-10	8140.23.3801	4749395	8.0	13.03	56.0	F	G1
8095.600	IN-EX	Daily II 30-10	8140.23.3811	4749395	8.0	13.03	56.0	F	G1
8095.600	IN-EX	Daily II 30-10	8140.23.3821	4749395	8.0	13.03	56.0	F	G1
8095.600	IN-EX	Daily II 30-10	8140.23.3861	4749395	8.0	13.03	56.0	F	G1
8095.600	IN-EX	Daily II 30-10	8140.23.3900	4749395	8.0	13.03	56.0	F	G1
8095.600	IN-EX	Daily II 30-10	8140.27S.3710	4749395	8.0	13.03	56.0	F	G1
8095.600	IN-EX	Daily II 30-10 C	8140.23.3711	4749395	8.0	13.03	56.0	F	G1
8095.600	IN-EX	Daily II 30-10 C	8140.23.3720	4749395	8.0	13.03	56.0	F	G1
8095.600	IN-EX	Daily II 30-10 C	8140.23.3721	4749395	8.0	13.03	56.0	F	G1
8095.600	IN-EX	Daily II 30-10 C	8140.23.3730	4749395	8.0	13.03	56.0	F	G1
8095.600	IN-EX	Daily II 30-10 C	8140.23.3731	4749395	8.0	13.03	56.0	F	G1
8095.600	IN-EX	Daily II 30-10 C	8140.23.3750	4749395	8.0	13.03	56.0	F	G1
8095.600	IN-EX	Daily II 30-10 C	8140.23.3760	4749395	8.0	13.03	56.0	F	G1
8095.600	IN-EX	Daily II 30-10 C	8140.23.3761	4749395	8.0	13.03	56.0	F	G1
8095.600	IN-EX	Daily II 30-10 C	8140.23.3801	4749395	8.0	13.03	56.0	F	G1
8095.600	IN-EX	Daily II 30-10 C	8140.23.3811	4749395	8.0	13.03	56.0	F	G1
8095.600	IN-EX	Daily II 30-10 C	8140.23.3821	4749395	8.0	13.03	56.0	F	G1
8095.600	IN-EX	Daily II 30-10 C	8140.23.3861	4749395	8.0	13.03	56.0	F	G1
8095.600	IN-EX	Daily II 30-10 C	8140.23.3900	4749395	8.0	13.03	56.0	F	G1
8095.600	IN-EX	Daily II 30-10 C	8140.27S.3710	4749395	8.0	13.03	56.0	F	G1
8095.600	IN-EX	Daily II 30-8	8140.07.2700	4749395	8.0	13.03	56.0	F	G1
8095.600	IN-EX	Daily II 30-8	8140.07.2712	4749395	8.0	13.03	56.0	F	G1
8095.600	IN-EX	Daily II 30-8	8140.07.2731	4749395	8.0	13.03	56.0	F	G1
8095.600	IN-EX	Daily II 30-8	8140.07.3731	4749395	8.0	13.03	56.0	F	G1
8095.600	IN-EX	Daily II 30-8	8140.63	4749395	8.0	13.03	56.0	F	G1
8095.600	IN-EX	Daily II 30-8	8140.63.2200	4749395	8.0	13.03	56.0	F	G1
8095.600	IN-EX	Daily II 30-8	8140.63.2586	4749395	8.0	13.03	56.0	F	G1
8095.600	IN-EX	Daily II 30-8	8140.63.2800	4749395	8.0	13.03	56.0	F	G1
8095.600	IN-EX	Daily II 30-8	8140.63.3700	4749395	8.0	13.03	56.0	F	G1
8095.600	IN-EX	Daily II 30-8	8140.63.3711	4749395	8.0	13.03	56.0	F	G1
8095.600	IN-EX	Daily II 30-8	8140.63.3713	4749395	8.0	13.03	56.0	F	G1
8095.600	IN-EX	Daily II 30-8	8140.63.3721	4749395	8.0	13.03	56.0	F	G1
8095.600	IN-EX	Daily II 30-8	8140.63.3723	4749395	8.0	13.03	56.0	F	G1
8095.600	IN-EX	Daily II 30-8	8140.63.4020	4749395	8.0	13.03	56.0	F	G1
8095.600	IN-EX	Daily II 30-8	8140.63.4030	4749395	8.0	13.03	56.0	F	G1
8095.600	IN-EX	Daily II 30-8	8140.67F.3711	4749395	8.0	13.03	56.0	F	G1
8095.600	IN-EX	Daily II 30-8	8140.67F.3721	4749395	8.0	13.03	56.0	F	G1
8095.600	IN-EX	Daily II 35-10	8140.23.3711	4749395	8.0	13.03	56.0	F	G1
8095.600	IN-EX	Daily II 35-10	8140.23.3720	4749395	8.0	13.03	56.0	F	G1
8095.600	IN-EX	Daily II 35-10	8140.23.3721	4749395	8.0	13.03	56.0	F	G1
8095.600	IN-EX	Daily II 35-10	8140.23.3730	4749395	8.0	13.03	56.0	F	G1
8095.600	IN-EX	Daily II 35-10	8140.23.3731	4749395	8.0	13.03	56.0	F	G1
8095.600	IN-EX	Daily II 35-10	8140.23.3750	4749395	8.0	13.03	56.0	F	G1
8095.600	IN-EX	Daily II 35-10	8140.23.3760	4749395	8.0	13.03	56.0	F	G1
8095.600	IN-EX	Daily II 35-10	8140.23.3761	4749395	8.0	13.03	56.0	F	G1
8095.600	IN-EX	Daily II 35-10	8140.23.3801	4749395	8.0	13.03	56.0	F	G1
8095.600	IN-EX	Daily II 35-10	8140.23.3811	4749395	8.0	13.03	56.0	F	G1
8095.600	IN-EX	Daily II 35-10	8140.23.3821	4749395	8.0	13.03	56.0	F	G1
8095.600	IN-EX	Daily II 35-10	8140.23.3861	4749395	8.0	13.03	56.0	F	G1
8095.600	IN-EX	Daily II 35-10	8140.23.3900	4749395	8.0	13.03	56.0	F	G1
8095.600	IN-EX	Daily II 35-10	8140.27.2101	4749395	8.0	13.03	56.0	F	G1
8095.600	IN-EX	Daily II 35-10	8140.27.2101	4749395	8.0	13.03	56.0	F	G1
8095.600	IN-EX	Daily II 35-10	8140.27.3700	4749395	8.0	13.03	56.0	F	G1
8095.600	IN-EX	Daily II 35-10	8140.27.3700	4749395	8.0	13.03	56.0	F	G1
8095.600	IN-EX	Daily II 35-10	8140.27S.3710	4749395	8.0	13.03	56.0	F	G1
8095.600	IN-EX	Daily II 35-10	8140.27S.3710	4749395	8.0	13.03	56.0	F	G1

(D1) Internal diameter, (D2) External diameter, (B) Shape, (C) Material

VALVE GUIDES

IVECO

IVT Ref.	Type	Model	Engine	OEM Ref.	D1	D2	Length	B	C
8095.600	IN-EX	Daily II 35-10	8140.27S.3800	4749395	8.0	13.03	56.0	F	G1
8095.600	IN-EX	Daily II 35-10	8140.27S.3800	4749395	8.0	13.03	56.0	F	G1
8095.600	IN-EX	Daily II 35-10	8140.47R.2790	4749395	8.0	13.03	56.0	F	G1
8095.600	IN-EX	Daily II 35-10	8140.97.2781	4749395	8.0	13.03	56.0	F	G1
8095.600	IN-EX	Daily II 35-10	8140.97.2783	4749395	8.0	13.03	56.0	F	G1
8095.600	IN-EX	Daily II 35-10	8140.97.2783	4749395	8.0	13.03	56.0	F	G1
8095.600	IN-EX	Daily II 35-12	8140.47.2700	4749395	8.0	13.03	56.0	F	G1
8095.600	IN-EX	Daily II 35-12	8140.47.2731	4749395	8.0	13.03	56.0	F	G1
8095.600	IN-EX	Daily II 35-12	8140.47.3731	4749395	8.0	13.03	56.0	F	G1
8095.600	IN-EX	Daily II 35-12	8140.47S.2785	4749395	8.0	13.03	56.0	F	G1
8095.600	IN-EX	Daily II 35-8	8140.07.2700	4749395	8.0	13.03	56.0	F	G1
8095.600	IN-EX	Daily II 35-8	8140.07.2712	4749395	8.0	13.03	56.0	F	G1
8095.600	IN-EX	Daily II 35-8	8140.07.2731	4749395	8.0	13.03	56.0	F	G1
8095.600	IN-EX	Daily II 35-8	8140.07.3731	4749395	8.0	13.03	56.0	F	G1
8095.600	IN-EX	Daily II 35-8	8140.63	4749395	8.0	13.03	56.0	F	G1
8095.600	IN-EX	Daily II 35-8	8140.63.2200	4749395	8.0	13.03	56.0	F	G1
8095.600	IN-EX	Daily II 35-8	8140.63.2586	4749395	8.0	13.03	56.0	F	G1
8095.600	IN-EX	Daily II 35-8	8140.63.2800	4749395	8.0	13.03	56.0	F	G1
8095.600	IN-EX	Daily II 35-8	8140.63.3700	4749395	8.0	13.03	56.0	F	G1
8095.600	IN-EX	Daily II 35-8	8140.63.3711	4749395	8.0	13.03	56.0	F	G1
8095.600	IN-EX	Daily II 35-8	8140.63.3713	4749395	8.0	13.03	56.0	F	G1
8095.600	IN-EX	Daily II 35-8	8140.63.3721	4749395	8.0	13.03	56.0	F	G1
8095.600	IN-EX	Daily II 35-8	8140.63.3723	4749395	8.0	13.03	56.0	F	G1
8095.600	IN-EX	Daily II 35-8	8140.63.4020	4749395	8.0	13.03	56.0	F	G1
8095.600	IN-EX	Daily II 35-8	8140.63.4030	4749395	8.0	13.03	56.0	F	G1
8095.600	IN-EX	Daily II 35-8	8140.67F.3711	4749395	8.0	13.03	56.0	F	G1
8095.600	IN-EX	Daily II 35-8	8140.67F.3721	4749395	8.0	13.03	56.0	F	G1
8095.600	IN-EX	Daily II 40-10 4x4	8140.23.3711	4749395	8.0	13.03	56.0	F	G1
8095.600	IN-EX	Daily II 40-10 4x4	8140.23.3720	4749395	8.0	13.03	56.0	F	G1
8095.600	IN-EX	Daily II 40-10 4x4	8140.23.3721	4749395	8.0	13.03	56.0	F	G1
8095.600	IN-EX	Daily II 40-10 4x4	8140.23.3730	4749395	8.0	13.03	56.0	F	G1
8095.600	IN-EX	Daily II 40-10 4x4	8140.23.3731	4749395	8.0	13.03	56.0	F	G1
8095.600	IN-EX	Daily II 40-10 4x4	8140.23.3750	4749395	8.0	13.03	56.0	F	G1
8095.600	IN-EX	Daily II 40-10 4x4	8140.23.3760	4749395	8.0	13.03	56.0	F	G1
8095.600	IN-EX	Daily II 40-10 4x4	8140.23.3761	4749395	8.0	13.03	56.0	F	G1
8095.600	IN-EX	Daily II 40-10 4x4	8140.23.3801	4749395	8.0	13.03	56.0	F	G1
8095.600	IN-EX	Daily II 40-10 4x4	8140.23.3811	4749395	8.0	13.03	56.0	F	G1
8095.600	IN-EX	Daily II 40-10 4x4	8140.23.3821	4749395	8.0	13.03	56.0	F	G1
8095.600	IN-EX	Daily II 40-10 4x4	8140.23.3861	4749395	8.0	13.03	56.0	F	G1
8095.600	IN-EX	Daily II 40-10 4x4	8140.23.3900	4749395	8.0	13.03	56.0	F	G1
8095.600	IN-EX	Daily II 40-10 V	8140.27.2720	4749395	8.0	13.03	56.0	F	G1
8095.600	IN-EX	Daily II 40-10 W 4x4	8140.23.3711	4749395	8.0	13.03	56.0	F	G1
8095.600	IN-EX	Daily II 40-10 W 4x4	8140.23.3720	4749395	8.0	13.03	56.0	F	G1
8095.600	IN-EX	Daily II 40-10 W 4x4	8140.23.3721	4749395	8.0	13.03	56.0	F	G1
8095.600	IN-EX	Daily II 40-10 W 4x4	8140.23.3730	4749395	8.0	13.03	56.0	F	G1
8095.600	IN-EX	Daily II 40-10 W 4x4	8140.23.3731	4749395	8.0	13.03	56.0	F	G1
8095.600	IN-EX	Daily II 40-10 W 4x4	8140.23.3750	4749395	8.0	13.03	56.0	F	G1
8095.600	IN-EX	Daily II 40-10 W 4x4	8140.23.3760	4749395	8.0	13.03	56.0	F	G1
8095.600	IN-EX	Daily II 40-10 W 4x4	8140.23.3761	4749395	8.0	13.03	56.0	F	G1
8095.600	IN-EX	Daily II 40-10 W 4x4	8140.23.3801	4749395	8.0	13.03	56.0	F	G1
8095.600	IN-EX	Daily II 40-10 W 4x4	8140.23.3811	4749395	8.0	13.03	56.0	F	G1
8095.600	IN-EX	Daily II 40-10 W 4x4	8140.23.3821	4749395	8.0	13.03	56.0	F	G1
8095.600	IN-EX	Daily II 40-10 W 4x4	8140.23.3861	4749395	8.0	13.03	56.0	F	G1
8095.600	IN-EX	Daily II 40-10 W 4x4	8140.23.3900	4749395	8.0	13.03	56.0	F	G1
8095.600	IN-EX	Daily II 40-12	8140.47.2700	4749395	8.0	13.03	56.0	F	G1
8095.600	IN-EX	Daily II 40-12 V	8140.47.2700	4749395	8.0	13.03	56.0	F	G1
8095.600	IN-EX	Daily II 45-10 V	8140.27.2101	4749395	8.0	13.03	56.0	F	G1
8095.600	IN-EX	Daily II 45-10 V	8140.27.2720	4749395	8.0	13.03	56.0	F	G1
8095.600	IN-EX	Daily II 45-10 V	8140.27S.3800	4749395	8.0	13.03	56.0	F	G1
8095.600	IN-EX	Daily II 49-10 V	8140.27.2101	4749395	8.0	13.03	56.0	F	G1
8095.600	IN-EX	Daily II 49-10 V	8140.27.2700	4749395	8.0	13.03	56.0	F	G1
8095.600	IN-EX	Daily II 49-10 V	8140.47R.2790	4749395	8.0	13.03	56.0	F	G1

(D1) Internal diameter, (D2) External diameter, (B) Shape, (C) Material

VALVE GUIDES

IVECO

IVT Ref.	Type	Model	Engine	OEM Ref.	D1	D2	Length	B	C
8095.600	IN-EX	Daily II 49-12 V	8140.43.3731	4749395	8.0	13.03	56.0	F	G1
8095.600	IN-EX	Daily II 49-12 V	8140.47.2711	4749395	8.0	13.03	56.0	F	G1
8095.600	IN-EX	Daily II 49-12 V	8140.47.2721	4749395	8.0	13.03	56.0	F	G1
8095.600	IN-EX	Daily II 49-12 V	8140.47.2731	4749395	8.0	13.03	56.0	F	G1
8095.600	IN-EX	Daily II 49-12 V	8140.47.3731	4749395	8.0	13.03	56.0	F	G1
8095.600	IN-EX	Daily II 49-12 V	8140.47S.2785	4749395	8.0	13.03	56.0	F	G1
8095.600	IN-EX	Daily II 59-12 V	8140.43.3731	4749395	8.0	13.03	56.0	F	G1
8095.600	IN-EX	Daily II 59-12 V	8140.47.2700	4749395	8.0	13.03	56.0	F	G1
8095.600	IN-EX	Daily II 59-12 V	8140.47.2711	4749395	8.0	13.03	56.0	F	G1
8095.600	IN-EX	Daily II 59-12 V	8140.47.2721	4749395	8.0	13.03	56.0	F	G1
8095.600	IN-EX	Daily II 59-12 V	8140.47.2731	4749395	8.0	13.03	56.0	F	G1
8095.600	IN-EX	Daily II 59-12 V	8140.47.3731	4749395	8.0	13.03	56.0	F	G1
8095.600	IN-EX	Daily II 59-12 V	8140.47S.2785	4749395	8.0	13.03	56.0	F	G1
8095.600	IN-EX	Daily II Autobus A 40-10	8140.23.3711	4749395	8.0	13.03	56.0	F	G1
8095.600	IN-EX	Daily II Autobus A 40-10	8140.23.3720	4749395	8.0	13.03	56.0	F	G1
8095.600	IN-EX	Daily II Autobus A 40-10	8140.23.3721	4749395	8.0	13.03	56.0	F	G1
8095.600	IN-EX	Daily II Autobus A 40-10	8140.23.3730	4749395	8.0	13.03	56.0	F	G1
8095.600	IN-EX	Daily II Autobus A 40-10	8140.23.3731	4749395	8.0	13.03	56.0	F	G1
8095.600	IN-EX	Daily II Autobus A 40-10	8140.23.3750	4749395	8.0	13.03	56.0	F	G1
8095.600	IN-EX	Daily II Autobus A 40-10	8140.23.3760	4749395	8.0	13.03	56.0	F	G1
8095.600	IN-EX	Daily II Autobus A 40-10	8140.23.3761	4749395	8.0	13.03	56.0	F	G1
8095.600	IN-EX	Daily II Autobus A 40-10	8140.23.3801	4749395	8.0	13.03	56.0	F	G1
8095.600	IN-EX	Daily II Autobus A 40-10	8140.23.3811	4749395	8.0	13.03	56.0	F	G1
8095.600	IN-EX	Daily II Autobus A 40-10	8140.23.3821	4749395	8.0	13.03	56.0	F	G1
8095.600	IN-EX	Daily II Autobus A 40-10	8140.23.3861	4749395	8.0	13.03	56.0	F	G1
8095.600	IN-EX	Daily II Autobus A 40-10	8140.23.3900	4749395	8.0	13.03	56.0	F	G1
8095.600	IN-EX	Daily II Autobus A 40-10	8140.27.2720	4749395	8.0	13.03	56.0	F	G1
8095.600	IN-EX	Daily II Autobus A 40-12	8140.43.3731	4749395	8.0	13.03	56.0	F	G1
8095.600	IN-EX	Daily II Autobus A 45-10	8140.27.2101	4749395	8.0	13.03	56.0	F	G1
8095.600	IN-EX	Daily II Autobus A 45-10	8140.27.2720	4749395	8.0	13.03	56.0	F	G1
8095.600	IN-EX	Daily II Autobus A 45-10	8140.27S.3800	4749395	8.0	13.03	56.0	F	G1
8095.600	IN-EX	Daily II Autobus A 45-12	8140.43.3731	4749395	8.0	13.03	56.0	F	G1
8095.600	IN-EX	Daily II Autobus A 45-12	8140.47.2721	4749395	8.0	13.03	56.0	F	G1
8095.600	IN-EX	Daily II Autobus A 45-12	8140.47.2731	4749395	8.0	13.03	56.0	F	G1
8095.600	IN-EX	Daily II Autobus A 45-12	8140.47.3731	4749395	8.0	13.03	56.0	F	G1
8095.600	IN-EX	Daily II Autobus A 45-12	8140.47S.2785	4749395	8.0	13.03	56.0	F	G1
8141.100	IN-EX	DAILY II Bus, A 40-10 (94139111,	8140.27.2720	4726483	8.0	13.03	60.0	A	G1
8141.100	IN-EX	DAILY II Bus, A 40-10 (95719111,	8140.23.	4726483	8.0	13.03	60.0	A	G1
8141.100	IN-EX	DAILY II Kasten/Kombi, 35-10 (12	8140.97.2781	4726483	8.0	13.03	60.0	A	G1
8141.100	IN-EX	DAILY II Kasten/Kombi, 35-12 (13	8140.47.2700/8140.47S	4726483	8.0	13.03	60.0	A	G1
8141.100	IN-EX	DAILY II Kasten/Kombi, 40-10 4x4	8140.23.	4726483	8.0	13.03	60.0	A	G1
8141.100	IN-EX	DAILY II Kasten/Kombi, 40-10 V	8140.27.2720	4726483	8.0	13.03	60.0	A	G1
8141.100	IN-EX	DAILY II Pritsche/Fahrgestell, 35-	8140.47R.2790	4726483	8.0	13.03	60.0	A	G1
8141.100	IN-EX	DAILY II Pritsche/Fahrgestell, 35-	8140.97.2781	4726483	8.0	13.03	60.0	A	G1
8141.100	IN-EX	DAILY II Pritsche/Fahrgestell, 35-	8140.47.2700	4726483	8.0	13.03	60.0	A	G1
8141.100	IN-EX	DAILY II Pritsche/Fahrgestell, 35-	8140.43.	4726483	8.0	13.03	60.0	A	G1
8141.100	IN-EX	DAILY II Pritsche/Fahrgestell, 40-	8140.23.	4726483	8.0	13.03	60.0	A	G1
8095.600	IN-EX	Daily II Ribaltabile 35-10 K	8140.23.3711	4749395	8.0	13.03	56.0	F	G1
8095.600	IN-EX	Daily II Ribaltabile 35-10 K	8140.23.3720	4749395	8.0	13.03	56.0	F	G1
8095.600	IN-EX	Daily II Ribaltabile 35-10 K	8140.23.3721	4749395	8.0	13.03	56.0	F	G1
8095.600	IN-EX	Daily II Ribaltabile 35-10 K	8140.23.3730	4749395	8.0	13.03	56.0	F	G1
8095.600	IN-EX	Daily II Ribaltabile 35-10 K	8140.23.3731	4749395	8.0	13.03	56.0	F	G1
8095.600	IN-EX	Daily II Ribaltabile 35-10 K	8140.23.3750	4749395	8.0	13.03	56.0	F	G1
8095.600	IN-EX	Daily II Ribaltabile 35-10 K	8140.23.3760	4749395	8.0	13.03	56.0	F	G1
8095.600	IN-EX	Daily II Ribaltabile 35-10 K	8140.23.3761	4749395	8.0	13.03	56.0	F	G1
8095.600	IN-EX	Daily II Ribaltabile 35-10 K	8140.23.3801	4749395	8.0	13.03	56.0	F	G1
8095.600	IN-EX	Daily II Ribaltabile 35-10 K	8140.23.3811	4749395	8.0	13.03	56.0	F	G1
8095.600	IN-EX	Daily II Ribaltabile 35-10 K	8140.23.3821	4749395	8.0	13.03	56.0	F	G1
8095.600	IN-EX	Daily II Ribaltabile 35-10 K	8140.23.3861	4749395	8.0	13.03	56.0	F	G1
8095.600	IN-EX	Daily II Ribaltabile 35-10 K	8140.23.3900	4749395	8.0	13.03	56.0	F	G1
8095.600	IN-EX	Daily II Ribaltabile 35-12 K	8140.23.3711	4749395	8.0	13.03	56.0	F	G1
8095.600	IN-EX	Daily II Ribaltabile 35-12 K	8140.23.3720	4749395	8.0	13.03	56.0	F	G1

(D1) Internal diameter, (D2) External diameter, (B) Shape, (C) Material

VALVE GUIDES

IVECO

IVT Ref.	Type	Model	Engine	OEM Ref.	D1	D2	Length	B	C
8095.600	IN-EX	Daily II Ribaltabile 35-12 K	8140.23.3721	4749395	8.0	13.03	56.0	F	G1
8095.600	IN-EX	Daily II Ribaltabile 35-12 K	8140.23.3730	4749395	8.0	13.03	56.0	F	G1
8095.600	IN-EX	Daily II Ribaltabile 35-12 K	8140.23.3731	4749395	8.0	13.03	56.0	F	G1
8095.600	IN-EX	Daily II Ribaltabile 35-12 K	8140.23.3750	4749395	8.0	13.03	56.0	F	G1
8095.600	IN-EX	Daily II Ribaltabile 35-12 K	8140.23.3760	4749395	8.0	13.03	56.0	F	G1
8095.600	IN-EX	Daily II Ribaltabile 35-12 K	8140.23.3761	4749395	8.0	13.03	56.0	F	G1
8095.600	IN-EX	Daily II Ribaltabile 35-12 K	8140.23.3801	4749395	8.0	13.03	56.0	F	G1
8095.600	IN-EX	Daily II Ribaltabile 35-12 K	8140.23.3811	4749395	8.0	13.03	56.0	F	G1
8095.600	IN-EX	Daily II Ribaltabile 35-12 K	8140.23.3821	4749395	8.0	13.03	56.0	F	G1
8095.600	IN-EX	Daily II Ribaltabile 35-12 K	8140.23.3861	4749395	8.0	13.03	56.0	F	G1
8095.600	IN-EX	Daily II Ribaltabile 35-12 K	8140.23.3900	4749395	8.0	13.03	56.0	F	G1
8095.600	IN-EX	Daily II Ribaltabile 35-8 K	8140.63	4749395	8.0	13.03	56.0	F	G1
8095.600	IN-EX	Daily II Ribaltabile 35-8 K	8140.63.2200	4749395	8.0	13.03	56.0	F	G1
8095.600	IN-EX	Daily II Ribaltabile 35-8 K	8140.63.2586	4749395	8.0	13.03	56.0	F	G1
8095.600	IN-EX	Daily II Ribaltabile 35-8 K	8140.63.2800	4749395	8.0	13.03	56.0	F	G1
8095.600	IN-EX	Daily II Ribaltabile 35-8 K	8140.63.3700	4749395	8.0	13.03	56.0	F	G1
8095.600	IN-EX	Daily II Ribaltabile 35-8 K	8140.63.3711	4749395	8.0	13.03	56.0	F	G1
8095.600	IN-EX	Daily II Ribaltabile 35-8 K	8140.63.3713	4749395	8.0	13.03	56.0	F	G1
8095.600	IN-EX	Daily II Ribaltabile 35-8 K	8140.63.3721	4749395	8.0	13.03	56.0	F	G1
8095.600	IN-EX	Daily II Ribaltabile 35-8 K	8140.63.3723	4749395	8.0	13.03	56.0	F	G1
8095.600	IN-EX	Daily II Ribaltabile 35-8 K	8140.63.4020	4749395	8.0	13.03	56.0	F	G1
8095.600	IN-EX	Daily II Ribaltabile 35-8 K	8140.63.4030	4749395	8.0	13.03	56.0	F	G1
8095.600	IN-EX	Daily II Ribaltabile 45-10	8140.27.2101	4749395	8.0	13.03	56.0	F	G1
8095.600	IN-EX	Daily II Ribaltabile 45-10	8140.27.2720	4749395	8.0	13.03	56.0	F	G1
8095.600	IN-EX	Daily II Ribaltabile 45-10	8140.27S.3800	4749395	8.0	13.03	56.0	F	G1
8095.600	IN-EX	Daily II Ribaltabile 49-10 K	8140.23.3711	4749395	8.0	13.03	56.0	F	G1
8095.600	IN-EX	Daily II Ribaltabile 49-10 K	8140.23.3720	4749395	8.0	13.03	56.0	F	G1
8095.600	IN-EX	Daily II Ribaltabile 49-10 K	8140.23.3721	4749395	8.0	13.03	56.0	F	G1
8095.600	IN-EX	Daily II Ribaltabile 49-10 K	8140.23.3730	4749395	8.0	13.03	56.0	F	G1
8095.600	IN-EX	Daily II Ribaltabile 49-10 K	8140.23.3731	4749395	8.0	13.03	56.0	F	G1
8095.600	IN-EX	Daily II Ribaltabile 49-10 K	8140.23.3750	4749395	8.0	13.03	56.0	F	G1
8095.600	IN-EX	Daily II Ribaltabile 49-10 K	8140.23.3760	4749395	8.0	13.03	56.0	F	G1
8095.600	IN-EX	Daily II Ribaltabile 49-10 K	8140.23.3761	4749395	8.0	13.03	56.0	F	G1
8095.600	IN-EX	Daily II Ribaltabile 49-10 K	8140.23.3801	4749395	8.0	13.03	56.0	F	G1
8095.600	IN-EX	Daily II Ribaltabile 49-10 K	8140.23.3811	4749395	8.0	13.03	56.0	F	G1
8095.600	IN-EX	Daily II Ribaltabile 49-10 K	8140.23.3821	4749395	8.0	13.03	56.0	F	G1
8095.600	IN-EX	Daily II Ribaltabile 49-10 K	8140.23.3861	4749395	8.0	13.03	56.0	F	G1
8095.600	IN-EX	Daily II Ribaltabile 49-10 K	8140.23.3900	4749395	8.0	13.03	56.0	F	G1
8095.600	IN-EX	Daily II Ribaltabile 49-10 K	8140.27.2101	4749395	8.0	13.03	56.0	F	G1
8095.600	IN-EX	Daily II Ribaltabile 49-10 K	8140.27.2700	4749395	8.0	13.03	56.0	F	G1
8095.600	IN-EX	Daily II Ribaltabile 49-10 K	8140.47R.2790	4749395	8.0	13.03	56.0	F	G1
8095.600	IN-EX	Daily II Ribaltabile 49-12 K	8140.43.3731	4749395	8.0	13.03	56.0	F	G1
8095.600	IN-EX	Daily II Ribaltabile 49-12 K	8140.47.2711	4749395	8.0	13.03	56.0	F	G1
8095.600	IN-EX	Daily II Ribaltabile 49-12 K	8140.47.2721	4749395	8.0	13.03	56.0	F	G1
8095.600	IN-EX	Daily II Ribaltabile 49-12 K	8140.47.2731	4749395	8.0	13.03	56.0	F	G1
8095.600	IN-EX	Daily II Ribaltabile 49-12 K	8140.47.3731	4749395	8.0	13.03	56.0	F	G1
8095.600	IN-EX	Daily II Ribaltabile 49-12 K	8140.47S.2785	4749395	8.0	13.03	56.0	F	G1
8095.600	IN-EX	Daily II Ribaltabile 59-12 K	8140.43.3731	4749395	8.0	13.03	56.0	F	G1
8095.600	IN-EX	Daily II Ribaltabile 59-12 K	8140.47.2700	4749395	8.0	13.03	56.0	F	G1
8095.600	IN-EX	Daily II Ribaltabile 59-12 K	8140.47.2711	4749395	8.0	13.03	56.0	F	G1
8095.600	IN-EX	Daily II Ribaltabile 59-12 K	8140.47.2731	4749395	8.0	13.03	56.0	F	G1
8095.600	IN-EX	Daily II Ribaltabile 59-12 K	8140.47.3731	4749395	8.0	13.03	56.0	F	G1
8095.600	IN-EX	Daily II Ribaltabile 59-12 K	8140.47S.2785	4749395	8.0	13.03	56.0	F	G1
8095.600	IN-EX	Daily III 29 L 11	8140.43C.4030	4749395	8.0	13.03	56.0	F	G1
8095.600	IN-EX	Daily III 29 L 11 V	8140.43C.4030	4749395	8.0	13.03	56.0	F	G1
8095.600	IN-EX	Daily III 29 L 13	8140.43S	4749395	8.0	13.03	56.0	F	G1
8095.600	IN-EX	Daily III 29 L 9	8140.63	4749395	8.0	13.03	56.0	F	G1
8095.600	IN-EX	Daily III 29 L 9	8140.63.2200	4749395	8.0	13.03	56.0	F	G1
8095.600	IN-EX	Daily III 29 L 9	8140.63.2586	4749395	8.0	13.03	56.0	F	G1
8095.600	IN-EX	Daily III 29 L 9	8140.63.2800	4749395	8.0	13.03	56.0	F	G1
8095.600	IN-EX	Daily III 29 L 9	8140.63.3700	4749395	8.0	13.03	56.0	F	G1
8095.600	IN-EX	Daily III 29 L 9	8140.63.3711	4749395	8.0	13.03	56.0	F	G1

(D1) Internal diameter, (D2) External diameter, (B) Shape, (C) Material

VALVE GUIDES

IVT Ref.	Type	Model	Engine	OEM Ref.	D1	D2	Length	B	C
IVECO									
8095.600	IN-EX	Daily III 29 L 9	8140.63.3713	4749395	8.0	13.03	56.0	F	G1
8095.600	IN-EX	Daily III 29 L 9	8140.63.3721	4749395	8.0	13.03	56.0	F	G1
8095.600	IN-EX	Daily III 29 L 9	8140.63.3723	4749395	8.0	13.03	56.0	F	G1
8095.600	IN-EX	Daily III 29 L 9	8140.63.4020	4749395	8.0	13.03	56.0	F	G1
8095.600	IN-EX	Daily III 29 L 9	8140.63.4030	4749395	8.0	13.03	56.0	F	G1
8095.600	IN-EX	Daily III 29 L 9 V	8140.63.2200	4749395	8.0	13.03	56.0	F	G1
8095.600	IN-EX	Daily III 29 L 9 V	8140.63.2586	4749395	8.0	13.03	56.0	F	G1
8095.600	IN-EX	Daily III 29 L 9 V	8140.63.2800	4749395	8.0	13.03	56.0	F	G1
8095.600	IN-EX	Daily III 29 L 9 V	8140.63.3700	4749395	8.0	13.03	56.0	F	G1
8095.600	IN-EX	Daily III 29 L 9 V	8140.63.3711	4749395	8.0	13.03	56.0	F	G1
8095.600	IN-EX	Daily III 29 L 9 V	8140.63.3713	4749395	8.0	13.03	56.0	F	G1
8095.600	IN-EX	Daily III 29 L 9 V	8140.63.3721	4749395	8.0	13.03	56.0	F	G1
8095.600	IN-EX	Daily III 29 L 9 V	8140.63.3723	4749395	8.0	13.03	56.0	F	G1
8095.600	IN-EX	Daily III 29 L 9 V	8140.63.4020	4749395	8.0	13.03	56.0	F	G1
8095.600	IN-EX	Daily III 29 L 9 V	8140.63.4030	4749395	8.0	13.03	56.0	F	G1
8095.600	IN-EX	Daily III 35 C 9	8140.63.4020	4749395	8.0	13.03	56.0	F	G1
8095.600	IN-EX	Daily III 35 C 9	8140.63.4030	4749395	8.0	13.03	56.0	F	G1
8095.600	IN-EX	Daily III 35 C 9 V	8140.63.4020	4749395	8.0	13.03	56.0	F	G1
8095.600	IN-EX	Daily III 35 C 9 V	8140.63.4030	4749395	8.0	13.03	56.0	F	G1
8095.600	IN-EX	Daily III 35 S 11	8140.43C.4030	4749395	8.0	13.03	56.0	F	G1
8095.600	IN-EX	Daily III 35 S 11	8140.43C.4031	4749395	8.0	13.03	56.0	F	G1
8095.600	IN-EX	Daily III 35 S 11 V	8140.43C.4030	4749395	8.0	13.03	56.0	F	G1
8095.600	IN-EX	Daily III 35 S 11 V	8140.43C.4031	4749395	8.0	13.03	56.0	F	G1
8095.600	IN-EX	Daily III 35 S 9 V	8140.63.4020	4749395	8.0	13.03	56.0	F	G1
8095.600	IN-EX	Daily III 35 S 9 V	8140.63.4030	4749395	8.0	13.03	56.0	F	G1
8095.600	IN-EX	Daily III 40 C 11	8140.43C.4030	4749395	8.0	13.03	56.0	F	G1
8095.600	IN-EX	Daily III 40 C 15	8140.43N	4749395	8.0	13.03	56.0	F	G1
8095.600	IN-EX	Daily III 40 C 15	8140.43N.4420	4749395	8.0	13.03	56.0	F	G1
8095.600	IN-EX	Daily III 50 C 11	8140.43C.4030	4749395	8.0	13.03	56.0	F	G1
8095.600	IN-EX	Daily III 50 C 13	8140.43S	4749395	8.0	13.03	56.0	F	G1
8095.600	IN-EX	Daily III 50 C 13	8140.43S	4749395	8.0	13.03	56.0	F	G1
8095.600	IN-EX	Daily III 50 C 15	8140.43N	4749395	8.0	13.03	56.0	F	G1
8095.600	IN-EX	Daily III 50 C 15	8140.43N.4420	4749395	8.0	13.03	56.0	F	G1
8095.600	IN-EX	Daily III 65 C 15	8140.43N	4749395	8.0	13.03	56.0	F	G1
8095.600	IN-EX	Daily III 65 C 15	8140.43N.4420	4749395	8.0	13.03	56.0	F	G1
8047.103	IN-EX	DAILY III Bus, 35 S 13, 40 C 13, 5	8140.43S	504053804	6.0	10.03	49.0	A	S01
8047.103	IN-EX	DAILY IV Bus, 35S14, 35S14 /P	F1AE0481HA	504053804	6.0	10.03	49.0	A	S01
8047.103	IN-EX	DAILY IV Kipper, 60C15	F1CE0481FA	504053804	6.0	10.03	49.0	A	S01
JAGUAR									
8006.105	IN-EX	XF 2.2 D	224DT	0220A2	6.0	10.06	41.5	A	S06
8006.105	IN-EX	XF 2.2 D	224DT	0220A2	6.0	10.06	41.5	A	S06
8006.105	IN-EX	XF 2.2 D	224DT	9640340380	6.0	10.06	41.5	A	S06
8006.105	IN-EX	XF 2.2 D	224DT	9640340380	6.0	10.06	41.5	A	S06
8006.105	IN-EX	XF Sportbrake 2.2 D	224DT	0220A2	6.0	10.06	41.5	A	S06
8006.105	IN-EX	XF Sportbrake 2.2 D	224DT	0220A2	6.0	10.06	41.5	A	S06
8006.105	IN-EX	XF Sportbrake 2.2 D	224DT	9640340380	6.0	10.06	41.5	A	S06
8006.105	IN-EX	XF Sportbrake 2.2 D	224DT	9640340380	6.0	10.06	41.5	A	S06
JEEP									
8170.601	IN-EX	COMPASS (MK49), 2.0 CRD	ECD/ECE		6.0	10.06	42.0	F	B
8170.601	IN-EX	COMPASS (MK49), 2.0 CRD 4x4	ECE		6.0	10.06	42.0	F	B
8184.600	IN	GRAND CHEROKEE II (WJ, WG),	-	6060531229	6.0	12.56	37.5	F	G1
8184.600	IN	GRAND CHEROKEE II (WJ, WG),	ENF	6060531229	6.0	12.56	37.5	F	G1
8184.600	IN	GRAND CHEROKEE II (WJ, WG),	-	6060531229	6.0	12.56	37.5	F	G1
8183.605	IN-EX	GRAND CHEROKEE III (WH, WK	EXL		6.0	11.56	34.4	F	S06
8170.601	IN-EX	PATRIOT (MK74), 2.0 CRD 4x4	ECD/ECE		6.0	10.06	42.0	F	B
KIA									
8132.904	IN-EX	CARENS II (FJ), 2.0 CRDi	D4EA	2211427000	6.0	11.05	36.6	P	S03
8132.904	IN-EX	CARENS II (FJ), 2.0 CRDi	D4EA	2211427000	6.0	11.05	36.6	P	S03
8150.604	IN	CARENS III (UN), 1.6 CRDi 110	D4FB	221142A000	5.5	11.05	31.5	F	S03

(D1) Internal diameter, (D2) External diameter, (B) Shape, (C) Material

VALVE GUIDES

IVT Ref.	Type	Model	Engine	OEM Ref.	D1	D2	Length	B	C
KIA									
8150.604	IN	CARENS III (UN), 1.6 CRDi 128	D4FB	221142A000	5.5	11.05	31.5	F	S03
8181.904	IN-EX	CARENS III (UN), 1.6 CVVT	G4FC	221142B000	5.5	10.05	40.5	P	S03
8181.904	IN-EX	CARENS III (UN), 1.6 CVVT	G4FC	221142B000	5.5	10.05	40.5	P	S03
8132.904	IN-EX	CARENS III (UN), 2.0 CRDi 115	D4EA	2211427000	6.0	11.05	36.6	P	S03
8132.904	IN-EX	CARENS III (UN), 2.0 CRDi 135	D4EA	2211427000	6.0	11.05	36.6	P	S03
8132.904	IN-EX	CARENS III (UN), 2.0 CRDi 140	D4EA	2211427000	6.0	11.05	36.6	P	S03
8210.604	IN-EX	CARNIVAL / GRAND CARNIVAL I	D4HB	221192F000	5.9	11.05	46.5	F	S03
8210.604	IN-EX	CARNIVAL / GRAND CARNIVAL I	D4HB	221192F000	5.9	11.05	46.5	F	S03
8211.604	IN	CARNIVAL / GRAND CARNIVAL I	D4HB	222142F000	6.0	11.05	46.5	F-6	S03
8211.604	IN	CARNIVAL / GRAND CARNIVAL I	D4HB	222142F000	6.0	11.05	46.5	F-6	S03
8150.604	IN	CEE`D Sportswagon (JD), 1.4 CR	D4FC	221142A000	5.5	11.05	31.5	F	S03
8181.904	IN-EX	CEE`D Sportswagon (JD), 1.4 CV	G4FA	221142B000	5.5	10.05	40.5	P	S03
8150.604	IN	CEE`D Sportswagon (JD), 1.6 CR	D4FB	221142A000	5.5	11.05	31.5	F	S03
8150.604	IN	CEE`D Sportswagon (JD), 1.6 CR	D4FB	221142A000	5.5	11.05	31.5	F	S03
8181.904	IN-EX	CEE`D Sportswagon (JD), 1.6 GD	G4FD	221142B000	5.5	10.05	40.5	P	S03
8181.904	IN-EX	CEE'D (JD), 1.4 CVVT	G4FA-L	221142B000	5.5	10.05	40.5	P	S03
8150.604	IN	CEE'D (JD), 1.6 CRDi 115	D4FB	221142A000	5.5	11.05	31.5	F	S03
8150.604	IN	CEE'D (JD), 1.6 CRDi 90	D4FB-L	221142A000	5.5	11.05	31.5	F	S03
8181.904	IN-EX	CEE'D (JD), 1.6 CVVT	G4FC	221142B000	5.5	10.05	40.5	P	S03
8181.904	IN-EX	CEE'D Schrägheck (ED), 1.4	G4FA	221142B000	5.5	10.05	40.5	P	S03
8181.904	IN-EX	CEE'D Schrägheck (ED), 1.4	G4FA	221142B000	5.5	10.05	40.5	P	S03
8181.904	IN-EX	CEE'D Schrägheck (ED), 1.4 CVV	G4FA-L	221142B000	5.5	10.05	40.5	P	S03
8181.904	IN-EX	CEE'D Schrägheck (ED), 1.6	G4FC	221142B000	5.5	10.05	40.5	P	S03
8181.904	IN-EX	CEE'D Schrägheck (ED), 1.6	G4FC	221142B000	5.5	10.05	40.5	P	S03
8181.904	IN-EX	CEE'D Schrägheck (ED), 1.6	G4FC	221142B000	5.5	10.05	40.5	P	S03
8150.604	IN	CEE'D Schrägheck (ED), 1.6 CRD	D4FB	221142A000	5.5	11.05	31.5	F	S03
8150.604	IN	CEE'D Schrägheck (ED), 1.6 CRD	D4FB	221142A000	5.5	11.05	31.5	F	S03
8150.604	IN	CEE'D Schrägheck (ED), 1.6 CRD	D4FB-L	221142A000	5.5	11.05	31.5	F	S03
8181.904	IN-EX	CEE'D Schrägheck (ED), 1.6 CVV	G4FC	221142B000	5.5	10.05	40.5	P	S03
8132.904	IN-EX	CEE'D Schrägheck (ED), 2.0 CRD	D4EA	2211427000	6.0	11.05	36.6	P	S03
8132.904	IN-EX	CEE'D Schrägheck (ED), 2.0 CRD	D4EA-F	2211427000	6.0	11.05	36.6	P	S03
8181.904	IN-EX	CEE'D SW (ED), 1.4	G4FA	221142B000	5.5	10.05	40.5	P	S03
8181.904	IN-EX	CEE'D SW (ED), 1.4	G4FA	221142B000	5.5	10.05	40.5	P	S03
8181.904	IN-EX	CEE'D SW (ED), 1.4 CVVT	G4FA-L	221142B000	5.5	10.05	40.5	P	S03
8181.904	IN-EX	CEE'D SW (ED), 1.6	G4FC	221142B000	5.5	10.05	40.5	P	S03
8181.904	IN-EX	CEE'D SW (ED), 1.6	G4FC	221142B000	5.5	10.05	40.5	P	S03
8181.904	IN-EX	CEE'D SW (ED), 1.6	G4FC	221142B000	5.5	10.05	40.5	P	S03
8150.604	IN	CEE'D SW (ED), 1.6 CRDi 115	D4FB	221142A000	5.5	11.05	31.5	F	S03
8150.604	IN	CEE'D SW (ED), 1.6 CRDi 128	D4FB	221142A000	5.5	11.05	31.5	F	S03
8150.604	IN	CEE'D SW (ED), 1.6 CRDi 90	D4FB-L	221142A000	5.5	11.05	31.5	F	S03
8181.904	IN-EX	CEE'D SW (ED), 1.6 CVVT	G4FC	221142B000	5.5	10.05	40.5	P	S03
8132.904	IN-EX	CEE'D SW (ED), 2.0 CRDi 140	D4EA-F	2211427000	6.0	11.05	36.6	P	S03
8150.604	IN	CERATO (LD), 1.5 CRDi	D4FA	221142A000	5.5	11.05	31.5	F	S03
8181.904	IN-EX	CERATO (LD), 1.6	G4ED	221142B000	5.5	10.05	40.5	P	S03
8125.905	EX	CERATO (LD), 1.6	G4ED	2211526000	6.0	11.06	41.0	P-6	S03
8150.604	IN	CERATO (LD), 1.6 CRDi	D4FB	221142A000	5.5	11.05	31.5	F	S03
8132.904	IN-EX	CERATO (LD), 2.0 CRDi	D4EA	2211427000	6.0	11.05	36.6	P	S03
8150.604	IN	CERATO Stufenheck (LD), 1.5 CR	D4FA	221142A000	5.5	11.05	31.5	F	S03
8181.904	IN-EX	CERATO Stufenheck (LD), 1.6	G4ED	221142B000	5.5	10.05	40.5	P	S03
8125.905	EX	CERATO Stufenheck (LD), 1.6	G4ED	2211526000	6.0	11.06	41.0	P-6	S03
8181.904	IN-EX	CERATO Stufenheck (LD), 1.6	G4FC	221142B000	5.5	10.05	40.5	P	S03
8150.604	IN	CERATO Stufenheck (LD), 1.6 CR	D4FB	221142A000	5.5	11.05	31.5	F	S03
8132.904	IN-EX	CERATO Stufenheck (LD), 2.0 CR	D4EA	2211427000	6.0	11.05	36.6	P	S03
8139.904	IN	JOICE, 2.0	G4CP	2211433911	6.6	12.1	45.5	P	S03
8139.904	IN	JOICE, 2.0	G4CP	2211433911	6.6	12.1	45.5	P	S03
8132.904	IN-EX	MAGENTIS (MG), 2.0 CRDi	D4EA	2211427000	6.0	11.05	36.6	P	S03
8132.904	IN-EX	MAGENTIS (MG), 2.0 CRDi	D4EA	2211427000	6.0	11.05	36.6	P	S03
8132.904	IN-EX	MAGENTIS (MG), 2.0 CRDi	D4EA	2211427000	6.0	11.05	36.6	P	S03
8150.604	IN	OPTIMA, 1.7 CRDi	D4FD-L	221142A000	5.5	11.05	31.5	F	S03
8151.904	IN	PICANTO (BA), 1.0	G4HE	2211402500	5.5	10.05	47.0	P	S03
8151.904	IN	PICANTO (BA), 1.0	G4HE	2211402500	5.5	10.05	47.0	P	S03
8151.904	IN	PICANTO (BA), 1.1	G4HG	2211402500	5.5	10.05	47.0	P	S03

(D1) Internal diameter, (D2) External diameter, (B) Shape, (C) Material

VALVE GUIDES

IVT Ref.	Type	Model	Engine	OEM Ref.	D1	D2	Length	B	C
KIA									
8150.604	IN	PICANTO (BA), 1.1 CRDi	D3FA	221142A000	5.5	11.05	31.5	F	S03
8142.900	EX	PRIDE (DA), 1.3 16V	B3	B3Y010290	6.0	11.05	48.6	P-1-6	G1
8142.900	EX	PRIDE (DA), 1.3 16V	B3	B3Y010290	6.0	11.05	48.6	P-1-6	G1
8142.900	EX	PRIDE (DA), 1.3 16V	B3	B6Z010290	6.0	11.05	48.6	P-1-6	G1
8142.900	EX	PRIDE (DA), 1.3 16V	B3	B6Z010290	6.0	11.05	48.6	P-1-6	G1
8142.900	EX	PRIDE Kombi, 1.3	B3A5	B3Y010290	6.0	11.05	48.6	P-1-6	G1
8142.900	EX	PRIDE Kombi, 1.3	B3A5	B6Z010290	6.0	11.05	48.6	P-1-6	G1
8181.904	IN-EX	PRO CEE'D (ED), 1.4	G4FA	221142B000	5.5	10.05	40.5	P	S03
8181.904	IN-EX	PRO CEE'D (ED), 1.4	G4FA	221142B000	5.5	10.05	40.5	P	S03
8181.904	IN-EX	PRO CEE'D (ED), 1.6	G4FC	221142B000	5.5	10.05	40.5	P	S03
8181.904	IN-EX	PRO CEE'D (ED), 1.6	G4FC	221142B000	5.5	10.05	40.5	P	S03
8150.604	IN	PRO CEE'D (ED), 1.6 CRDi 115	D4FB	221142A000	5.5	11.05	31.5	F	S03
8150.604	IN	PRO CEE'D (ED), 1.6 CRDi 90	D4FB-L	221142A000	5.5	11.05	31.5	F	S03
8181.904	IN-EX	PRO CEE'D (ED), 1.6 CVVT	G4FC	221142B000	5.5	10.05	40.5	P	S03
8125.905	EX	PRO CEE'D (ED), 2.0	G4GC	2211526000	6.0	11.06	41.0	P-6	S03
8132.904	IN-EX	PRO CEE'D (ED), 2.0 CRDi 140	D4EA-F	2211427000	6.0	11.05	36.6	P	S03
8125.905	EX	RIO II (JB), 1.4 16V	G4EE	2211526000	6.0	11.06	41.0	P-6	S03
8150.604	IN	RIO II (JB), 1.5 CRDi	D4FA	221142A000	5.5	11.05	31.5	F	S03
8125.905	EX	RIO II (JB), 1.6 CVVT	G4ED	2211526000	6.0	11.06	41.0	P-6	S03
8125.905	EX	RIO II Stufenheck (JB), 1.4 16V	G4EE	2211526000	6.0	11.06	41.0	P-6	S03
8150.604	IN	RIO II Stufenheck (JB), 1.5 CRDi	D4FA	221142A000	5.5	11.05	31.5	F	S03
8125.905	EX	RIO II Stufenheck (JB), 1.6 16V	G4ED	2211526000	6.0	11.06	41.0	P-6	S03
8150.604	IN	RIO III (UB), 1.1 CRDi	D3FA	221142A000	5.5	11.05	31.5	F	S03
8150.604	IN	RIO III (UB), 1.4 CRDi	D4FC	221142A000	5.5	11.05	31.5	F	S03
8181.904	IN-EX	RIO III (UB), 1.4 CVVT	G4FA	221142B000	5.5	10.05	40.5	P	S03
8181.904	IN-EX	RIO III Stufenheck (UB), 1.4 CVV	G4FA	221142B000	5.5	10.05	40.5	P	S03
8142.900	EX	SEPHIA (FA), 1.5 i	B5	B3Y010290	6.0	11.05	48.6	P-1-6	G1
8142.900	EX	SEPHIA (FA), 1.5 i	B5	B6Z010290	6.0	11.05	48.6	P-1-6	G1
8142.900	EX	SEPHIA Stufenheck (FA), 1.5 i	B5	B3Y010290	6.0	11.05	48.6	P-1-6	G1
8142.900	EX	SEPHIA Stufenheck (FA), 1.5 i	B5	B6Z010290	6.0	11.05	48.6	P-1-6	G1
8142.900	EX	SHUMA Stufenheck (FB), 1.5	OK280	B3Y010290	6.0	11.05	48.6	P-1-6	G1
8142.900	EX	SHUMA Stufenheck (FB), 1.5	OK280	B6Z010290	6.0	11.05	48.6	P-1-6	G1
8210.604	IN-EX	SORENTO II (XM), 2.0 CRDi	D4HA	221192F000	5.9	11.05	46.5	F	S03
8211.604	IN	SORENTO II (XM), 2.0 CRDi	D4HA	222142F000	6.0	11.05	46.5	F-6	S03
8210.604	IN-EX	SORENTO II (XM), 2.0 CRDi 4WD	D4HA	221192F000	5.9	11.05	46.5	F	S03
8211.604	IN	SORENTO II (XM), 2.0 CRDi 4WD	D4HA	222142F000	6.0	11.05	46.5	F-6	S03
8210.604	IN-EX	SORENTO II (XM), 2.2 CRDi	D4HB	221192F000	5.9	11.05	46.5	F	S03
8211.604	IN	SORENTO II (XM), 2.2 CRDi	D4HB	222142F000	6.0	11.05	46.5	F-6	S03
8210.604	IN-EX	SORENTO II (XM), 2.2 CRDi 4WD	D4HB	221192F000	5.9	11.05	46.5	F	S03
8211.604	IN	SORENTO II (XM), 2.2 CRDi 4WD	D4HB	222142F000	6.0	11.05	46.5	F-6	S03
8150.604	IN	SOUL (AM), 1.6 CRDi 115	D4FB	221142A000	5.5	11.05	31.5	F	S03
8150.604	IN	SOUL (AM), 1.6 CRDi 128	D4FB	221142A000	5.5	11.05	31.5	F	S03
8181.904	IN-EX	SOUL (AM), 1.6 CVVT	G4FC	221142B000	5.5	10.05	40.5	P	S03
8181.904	IN-EX	SOUL (AM), 1.6 CVVT	G4FC	221142B000	5.5	10.05	40.5	P	S03
8181.904	IN-EX	SOUL (AM), 1.6 GDI	G4FD	221142B000	5.5	10.05	40.5	P	S03
8132.904	IN-EX	SPORTAGE (JE_, KM_), 2.0 CRD	D4EA	2211427000	6.0	11.05	36.6	P	S03
8132.904	IN-EX	SPORTAGE (JE_, KM_), 2.0 CRD	D4EA	2211427000	6.0	11.05	36.6	P	S03
8132.904	IN-EX	SPORTAGE (JE_, KM_), 2.0 CRD	D4EA	2211427000	6.0	11.05	36.6	P	S03
8132.904	IN-EX	SPORTAGE (JE_, KM_), 2.0 CRD	D4EA-V	2211427000	6.0	11.05	36.6	P	S03
8132.904	IN-EX	SPORTAGE (JE_, KM_), 2.0 CRD	D4EA	2211427000	6.0	11.05	36.6	P	S03
8132.904	IN-EX	SPORTAGE (JE_, KM_), 2.0 CRD	D4EA	2211427000	6.0	11.05	36.6	P	S03
8132.904	IN-EX	SPORTAGE (JE_, KM_), 2.0 CRD	D4EA	2211427000	6.0	11.05	36.6	P	S03
8132.904	IN-EX	SPORTAGE (JE_, KM_), 2.0 CRD	D4EA-V/D4EA-F	2211427000	6.0	11.05	36.6	P	S03
8181.904	IN-EX	SPORTAGE (SL), 1.6 GDI	G4FD	221142B000	5.5	10.05	40.5	P	S03
8150.604	IN	SPORTAGE (SL), 1.7 CRDi	D4FD-L	221142A000	5.5	11.05	31.5	F	S03
8210.604	IN-EX	SPORTAGE (SL), 2.0 CRDi	D4HA	221192F000	5.9	11.05	46.5	F	S03
8210.604	IN-EX	SPORTAGE (SL), 2.0 CRDi	D4HA	221192F000	5.9	11.05	46.5	F	S03
8211.604	IN	SPORTAGE (SL), 2.0 CRDi	D4HA	222142F000	6.0	11.05	46.5	F-6	S03
8211.604	IN	SPORTAGE (SL), 2.0 CRDi	D4HA	222142F000	6.0	11.05	46.5	F-6	S03
8210.604	IN-EX	SPORTAGE (SL), 2.0 CRDi AWD	D4HA	221192F000	5.9	11.05	46.5	F	S03
8210.604	IN-EX	SPORTAGE (SL), 2.0 CRDi AWD	D4HA	221192F000	5.9	11.05	46.5	F	S03
8211.604	IN	SPORTAGE (SL), 2.0 CRDi AWD	D4HA	222142F000	6.0	11.05	46.5	F-6	S03

(D1) Internal diameter, (D2) External diameter, (B) Shape, (C) Material

VALVE GUIDES

IVT Ref.	Type	Model	Engine	OEM Ref.	D1	D2	Length	B	C
KIA									
8211.604	IN	SPORTAGE (SL), 2.0 CRDi AWD	D4HA	222142F000	6.0	11.05	46.5	F-6	S03
8150.604	IN	VENGA (YN), 1.4 CRDi 75	D4FC	221142A000	5.5	11.05	31.5	F	S03
8150.604	IN	VENGA (YN), 1.4 CRDi 75	D4FC	221142A000	5.5	11.05	31.5	F	S03
8150.604	IN	VENGA (YN), 1.4 CRDi 90	D4FC	221142A000	5.5	11.05	31.5	F	S03
8181.904	IN-EX	VENGA (YN), 1.4 CVVT	G4FA-L	221142B000	5.5	10.05	40.5	P	S03
8150.604	IN	VENGA (YN), 1.6 CRDi 115	D4FB	221142A000	5.5	11.05	31.5	F	S03
8150.604	IN	VENGA (YN), 1.6 CRDi 128	D4FB	221142A000	5.5	11.05	31.5	F	S03
8181.904	IN-EX	VENGA (YN), 1.6 CVVT	G4FC	221142B000	5.5	10.05	40.5	P	S03
LANCIA									
8146.600	IN-EX	BETA H.P.E. (828_), 1600 (828B	828 B.000		8.0	14.06	46.5	F	G
8146.600	IN-EX	BETA (828_), 1300 (828CB3)	-		8.0	14.06	46.5	F	G
8146.600	IN-EX	BETA (828_), 1400 (828AB2)	828 A2.000		8.0	14.06	46.5	F	G
8146.600	IN-EX	BETA (828_), 1600 (828CB0, 828	828 B.000		8.0	14.06	46.5	F	G
8146.600	IN-EX	BETA (828_), 1800 (828AB1)	828 A1.000		8.0	14.06	46.5	F	G
8146.600	IN-EX	BETA Coupe (828_), 1600 (828B	828 B.000		8.0	14.06	46.5	F	G
8146.600	IN-EX	DEDRA (835_), 1.6 i.e. (835AA)	835 A1.000		8.0	14.06	46.5	F	G
8146.600	IN-EX	DEDRA (835_), 1.6 i.e. (835AB)	835 A1.046		8.0	14.06	46.5	F	G
8146.600	IN-EX	DEDRA (835_), 1.6 i.e. (835AN)	835 C1.000		8.0	14.06	46.5	F	G
8146.600	IN-EX	DEDRA (835_), 1.6 LE (835EB) K	159 B9.000		8.0	14.06	46.5	F	G
8086.600	IN-EX	DEDRA 1.6i e 16V	182 A4 000	020012306A	7.0	13.03	42.5	F	G
8086.600	IN-EX	DEDRA 1.6i e 16V	182 A4 000	4265699	7.0	13.03	42.5	F	G
8105.600	EX	DEDRA 1.8 / DEDRA GT 16V	183 A1 000	60811090	7.0	13.03	46.0	F	G1
8105.600	EX	DEDRA 1.8 / DEDRA GT 16V	183 A1 000	60811091	7.0	13.03	46.0	F	G1
8105.600	EX	DEDRA 1.8 / DEDRA GT 16V	183 A1 000	7779402	7.0	13.03	46.0	F	G1
8102.600	IN	Dedra 1.8 16V LE	182 A2.000	60811087	7.0	13.03	42.5	F	G1
8105.600	EX	Dedra 1.8 16V LE	182 A2.000	60811090	7.0	13.03	46.0	F	G1
8105.600	EX	Dedra 1.8 16V LE	182 A2.000	60811091	7.0	13.03	46.0	F	G1
8102.600	IN	Dedra 1.8 16V LE	182 A2.000	7756897	7.0	13.03	42.5	F	G1
8102.600	IN	Dedra 1.8 16V LE	182 A2.000	7757053	7.0	13.03	42.5	F	G1
8105.600	EX	Dedra 1.8 16V LE	182 A2.000	7779402	7.0	13.03	46.0	F	G1
8102.600	IN	Dedra 1.8 GT 16V	183 A1.000	60811087	7.0	13.03	42.5	F	G1
8105.600	EX	Dedra 1.8 GT 16V	183 A1.000	60811090	7.0	13.03	46.0	F	G1
8105.600	EX	Dedra 1.8 GT 16V	183 A1.000	60811091	7.0	13.03	46.0	F	G1
8102.600	IN	Dedra 1.8 GT 16V	183 A1.000	7756897	7.0	13.03	42.5	F	G1
8102.600	IN	Dedra 1.8 GT 16V	183 A1.000	7757053	7.0	13.03	42.5	F	G1
8105.600	EX	Dedra 1.8 GT 16V	183 A1.000	7779402	7.0	13.03	46.0	F	G1
8105.600	EX	DEDRA 1.8 LE / LS 16V	182 A2 000	60811090	7.0	13.03	46.0	F	G1
8105.600	EX	DEDRA 1.8 LE / LS 16V	182 A2 000	60811091	7.0	13.03	46.0	F	G1
8105.600	EX	DEDRA 1.8 LE / LS 16V	182 A2 000	7779402	7.0	13.03	46.0	F	G1
8105.600	EX	DEDRA 1.8 SW. LE/LS 16V	182 A2 000	60811090	7.0	13.03	46.0	F	G1
8105.600	EX	DEDRA 1.8 SW. LE/LS 16V	182 A2 000	60811091	7.0	13.03	46.0	F	G1
8105.600	EX	DEDRA 1.8 SW. LE/LS 16V	182 A2 000	7779402	7.0	13.03	46.0	F	G1
8146.600	IN-EX	DEDRA SW (835_), 1.6 (835EB)	159 B9.000		8.0	14.06	46.5	F	G
8102.600	IN	Dedra SW 1.8 16V LE	182 A2.000	60811087	7.0	13.03	42.5	F	G1
8105.600	EX	Dedra SW 1.8 16V LE	182 A2.000	60811090	7.0	13.03	46.0	F	G1
8105.600	EX	Dedra SW 1.8 16V LE	182 A2.000	60811091	7.0	13.03	46.0	F	G1
8102.600	IN	Dedra SW 1.8 16V LE	182 A2.000	7756897	7.0	13.03	42.5	F	G1
8102.600	IN	Dedra SW 1.8 16V LE	182 A2.000	7757053	7.0	13.03	42.5	F	G1
8105.600	EX	Dedra SW 1.8 16V LE	182 A2.000	7779402	7.0	13.03	46.0	F	G1
8102.600	IN	Dedra SW 1.8 GT 16V	183 A1.000	60811087	7.0	13.03	42.5	F	G1
8105.600	EX	Dedra SW 1.8 GT 16V	183 A1.000	60811090	7.0	13.03	46.0	F	G1
8105.600	EX	Dedra SW 1.8 GT 16V	183 A1.000	60811091	7.0	13.03	46.0	F	G1
8102.600	IN	Dedra SW 1.8 GT 16V	183 A1.000	7756897	7.0	13.03	42.5	F	G1
8102.600	IN	Dedra SW 1.8 GT 16V	183 A1.000	7757053	7.0	13.03	42.5	F	G1
8105.600	EX	Dedra SW 1.8 GT 16V	183 A1.000	7779402	7.0	13.03	46.0	F	G1
8105.600	EX	DELTA 1.8 H LX 16V	183 A1 000	60811090	7.0	13.03	46.0	F	G1
8105.600	EX	DELTA 1.8 H LX 16V	183 A1 000	60811091	7.0	13.03	46.0	F	G1
8105.600	EX	DELTA 1.8 H LX 16V	183 A1 000	7779402	7.0	13.03	46.0	F	G1
8146.600	IN-EX	DELTA I (831_), 1.1 (831AB.015)	831 B8.000		8.0	14.06	46.5	F	G
8146.600	IN-EX	DELTA I (831_), 1.3 (831AB.011)	831 A2.000/831 B.000		8.0	14.06	46.5	F	G
8146.600	IN-EX	DELTA I (831_), 1.5 (831AB.025)	831 A1.000/831 B1.000		8.0	14.06	46.5	F	G

(D1) Internal diameter, (D2) External diameter, (B) Shape, (C) Material

VALVE GUIDES

LANCIA

IVT Ref.	Type	Model	Engine	OEM Ref.	D1	D2	Length	B	C
8146.600	IN-EX	DELTA I (831_), 1.6 GT	831 A4.000		8.0	14.06	46.5	F	G
8146.600	IN-EX	DELTA I (831_), 1.6 GT i.e. (831A	149 C2.000		8.0	14.06	46.5	F	G
8146.600	IN-EX	DELTA I (831_), 1.6 GT i.e. (831A	831 B7.000		8.0	14.06	46.5	F	G
8146.600	IN-EX	DELTA I (831_), 1.6 HF Turbo	831 A7.000		8.0	14.06	46.5	F	G
8146.600	IN-EX	DELTA I (831_), 1.6 HF Turbo (83	831 B3.000		8.0	14.06	46.5	F	G
8146.600	IN-EX	DELTA I (831_), 1.6 HF Turbo (83	831 B7.046		8.0	14.06	46.5	F	G
8146.600	IN-EX	DELTA I (831_), 1.9 Turbo DS (83	831 D1.000		8.0	14.06	46.5	F	G
8146.600	IN-EX	DELTA II (836_), 1.6 i.e. (836AD)	835 C1.000		8.0	14.06	46.5	F	G
8102.600	IN	Delta II 1.8 ie 16V	182 A2.000	60811087	7.0	13.03	42.5	F	G1
8105.600	EX	Delta II 1.8 ie 16V	182 A2.000	60811090	7.0	13.03	46.0	F	G1
8105.600	EX	Delta II 1.8 ie 16V	182 A2.000	60811091	7.0	13.03	46.0	F	G1
8102.600	IN	Delta II 1.8 ie 16V	182 A2.000	7756897	7.0	13.03	42.5	F	G1
8102.600	IN	Delta II 1.8 ie 16V	182 A2.000	7757053	7.0	13.03	42.5	F	G1
8105.600	EX	Delta II 1.8 ie 16V	182 A2.000	7779402	7.0	13.03	46.0	F	G1
8102.600	IN	Delta II 1.8 ie 16V GT	183 A1.000	60811087	7.0	13.03	42.5	F	G1
8105.600	EX	Delta II 1.8 ie 16V GT	183 A1.000	60811090	7.0	13.03	46.0	F	G1
8105.600	EX	Delta II 1.8 ie 16V GT	183 A1.000	60811091	7.0	13.03	46.0	F	G1
8102.600	IN	Delta II 1.8 ie 16V GT	183 A1.000	7756897	7.0	13.03	42.5	F	G1
8102.600	IN	Delta II 1.8 ie 16V GT	183 A1.000	7757053	7.0	13.03	42.5	F	G1
8105.600	EX	Delta II 1.8 ie 16V GT	183 A1.000	7779402	7.0	13.03	46.0	F	G1
8186.105	IN-EX	DELTA III (844), 1.6 D Multijet	198 A2.000	55210016	5.0	10.03	46.7	A	S06
8186.105	IN-EX	DELTA III (844), 1.9 D Multijet	844 A1.000	55210016	5.0	10.03	46.7	A	S06
8186.105	IN-EX	DELTA III (844), 2.0 D Multijet	198 A5.000/198 A8.000	55210016	5.0	10.03	46.7	A	S06
8186.105	IN-EX	DELTA III (844), 2.0 D Multijet	844 A2.000	55210016	5.0	10.03	46.7	A	S06
8000.605	IN-EX	Delta III 1.4	198 A1.000	46441525	6.0	10.03	39.7	F	S06
8000.605	IN-EX	Delta III 1.4	198 A4.000	46441525	6.0	10.03	39.7	F	S06
8000.605	IN-EX	Delta III 1.4 Bi-Fuel	198 A4.000	46441525	6.0	10.03	39.7	F	S06
8105.600	EX	DELTA/DELTA 1.8 LE/GT/HPE 16	183 A1 000	60811090	7.0	13.03	46.0	F	G1
8105.600	EX	DELTA/DELTA 1.8 LE/GT/HPE 16	183 A1 000	60811091	7.0	13.03	46.0	F	G1
8105.600	EX	DELTA/DELTA 1.8 LE/GT/HPE 16	183 A1 000	7779402	7.0	13.03	46.0	F	G1
8105.600	EX	K 2.5 Coupé LS 20V	838 A2 000	60811090	7.0	13.03	46.0	F	G1
8105.600	EX	K 2.5 Coupé LS 20V	838 A2 000	60811091	7.0	13.03	46.0	F	G1
8105.600	EX	K 2.5 Coupé LS 20V	838 A2 000	7779402	7.0	13.03	46.0	F	G1
8105.600	EX	K 2.5 Coupé LS 20V	838 A6 000	60811090	7.0	13.03	46.0	F	G1
8105.600	EX	K 2.5 Coupé LS 20V	838 A6 000	60811091	7.0	13.03	46.0	F	G1
8105.600	EX	K 2.5 Coupé LS 20V	838 A6 000	7779402	7.0	13.03	46.0	F	G1
8105.600	EX	K 2.5 LS / LE / LX 20V	838 A2 000	60811090	7.0	13.03	46.0	F	G1
8105.600	EX	K 2.5 LS / LE / LX 20V	838 A2 000	60811091	7.0	13.03	46.0	F	G1
8105.600	EX	K 2.5 LS / LE / LX 20V	838 A2 000	7779402	7.0	13.03	46.0	F	G1
8105.600	EX	K 2.5 LS / LX 20V	838 A6 000	60811090	7.0	13.03	46.0	F	G1
8105.600	EX	K 2.5 LS / LX 20V	838 A6 000	60811091	7.0	13.03	46.0	F	G1
8105.600	EX	K 2.5 LS / LX 20V	838 A6 000	7779402	7.0	13.03	46.0	F	G1
8105.600	EX	K 2.5 SW. LS / LE / LX 20V	838 A2 000	60811090	7.0	13.03	46.0	F	G1
8105.600	EX	K 2.5 SW. LS / LE / LX 20V	838 A2 000	60811091	7.0	13.03	46.0	F	G1
8105.600	EX	K 2.5 SW. LS / LE / LX 20V	838 A2 000	7779402	7.0	13.03	46.0	F	G1
8102.600	IN	Kappa 2.0 20V	838 A6.000	60811087	7.0	13.03	42.5	F	G1
8105.600	EX	Kappa 2.0 20V	838 A6.000	60811090	7.0	13.03	46.0	F	G1
8105.600	EX	Kappa 2.0 20V	838 A6.000	60811091	7.0	13.03	46.0	F	G1
8102.600	IN	Kappa 2.0 20V	838 A6.000	7756897	7.0	13.03	42.5	F	G1
8102.600	IN	Kappa 2.0 20V	838 A6.000	7757053	7.0	13.03	42.5	F	G1
8105.600	EX	Kappa 2.0 20V	838 A6.000	7779402	7.0	13.03	46.0	F	G1
8102.600	IN	Kappa 2.4 20V	838 A2.000	60811087	7.0	13.03	42.5	F	G1
8105.600	EX	Kappa 2.4 20V	838 A2.000	60811090	7.0	13.03	46.0	F	G1
8105.600	EX	Kappa 2.4 20V	838 A2.000	60811091	7.0	13.03	46.0	F	G1
8102.600	IN	Kappa 2.4 20V	838 A2.000	7756897	7.0	13.03	42.5	F	G1
8102.600	IN	Kappa 2.4 20V	838 A2.000	7757053	7.0	13.03	42.5	F	G1
8105.600	EX	Kappa 2.4 20V	838 A2.000	7779402	7.0	13.03	46.0	F	G1
8102.600	IN	Kappa 2.4 20V	838 A2.027	60811087	7.0	13.03	42.5	F	G1
8105.600	EX	Kappa 2.4 20V	838 A2.027	60811090	7.0	13.03	46.0	F	G1
8105.600	EX	Kappa 2.4 20V	838 A2.027	60811091	7.0	13.03	46.0	F	G1
8102.600	IN	Kappa 2.4 20V	838 A2.027	7756897	7.0	13.03	42.5	F	G1
8102.600	IN	Kappa 2.4 20V	838 A2.027	7757053	7.0	13.03	42.5	F	G1

(D1) Internal diameter, (D2) External diameter, (B) Shape, (C) Material

VALVE GUIDES

LANCIA

IVT Ref.	Type	Model	Engine	OEM Ref.	D1	D2	Length	B	C
8105.600	EX	Kappa 2.4 20V	838 A2.027	7779402	7.0	13.03	46.0	F	G1
8102.600	IN	Kappa Coupé 2.0 20V	838 A6.000	60811087	7.0	13.03	42.5	F	G1
8105.600	EX	Kappa Coupé 2.0 20V	838 A6.000	60811090	7.0	13.03	46.0	F	G1
8105.600	EX	Kappa Coupé 2.0 20V	838 A6.000	60811091	7.0	13.03	46.0	F	G1
8102.600	IN	Kappa Coupé 2.0 20V	838 A6.000	7756897	7.0	13.03	42.5	F	G1
8102.600	IN	Kappa Coupé 2.0 20V	838 A6.000	7757053	7.0	13.03	42.5	F	G1
8105.600	EX	Kappa Coupé 2.0 20V	838 A6.000	7779402	7.0	13.03	46.0	F	G1
8102.600	IN	Kappa Coupé 2.4 20V	838 A2.000	60811087	7.0	13.03	42.5	F	G1
8105.600	EX	Kappa Coupé 2.4 20V	838 A2.000	60811090	7.0	13.03	46.0	F	G1
8105.600	EX	Kappa Coupé 2.4 20V	838 A2.000	60811091	7.0	13.03	46.0	F	G1
8102.600	IN	Kappa Coupé 2.4 20V	838 A2.000	7756897	7.0	13.03	42.5	F	G1
8102.600	IN	Kappa Coupé 2.4 20V	838 A2.000	7757053	7.0	13.03	42.5	F	G1
8105.600	EX	Kappa Coupé 2.4 20V	838 A2.000	7779402	7.0	13.03	46.0	F	G1
8102.600	IN	Kappa Coupé 2.4 20V	838 A2.027	60811087	7.0	13.03	42.5	F	G1
8105.600	EX	Kappa Coupé 2.4 20V	838 A2.027	60811090	7.0	13.03	46.0	F	G1
8105.600	EX	Kappa Coupé 2.4 20V	838 A2.027	60811091	7.0	13.03	46.0	F	G1
8102.600	IN	Kappa Coupé 2.4 20V	838 A2.027	7756897	7.0	13.03	42.5	F	G1
8102.600	IN	Kappa Coupé 2.4 20V	838 A2.027	7757053	7.0	13.03	42.5	F	G1
8105.600	EX	Kappa Coupé 2.4 20V	838 A2.027	7779402	7.0	13.03	46.0	F	G1
8102.600	IN	Kappa SW 2.0 20V	838 A6.000	60811087	7.0	13.03	42.5	F	G1
8105.600	EX	Kappa SW 2.0 20V	838 A6.000	60811090	7.0	13.03	46.0	F	G1
8105.600	EX	Kappa SW 2.0 20V	838 A6.000	60811091	7.0	13.03	46.0	F	G1
8102.600	IN	Kappa SW 2.0 20V	838 A6.000	7756897	7.0	13.03	42.5	F	G1
8102.600	IN	Kappa SW 2.0 20V	838 A6.000	7757053	7.0	13.03	42.5	F	G1
8105.600	EX	Kappa SW 2.0 20V	838 A6.000	7779402	7.0	13.03	46.0	F	G1
8102.600	IN	Kappa SW 2.4 20V	838 A2.000	60811087	7.0	13.03	42.5	F	G1
8105.600	EX	Kappa SW 2.4 20V	838 A2.000	60811090	7.0	13.03	46.0	F	G1
8105.600	EX	Kappa SW 2.4 20V	838 A2.000	60811091	7.0	13.03	46.0	F	G1
8102.600	IN	Kappa SW 2.4 20V	838 A2.000	7756897	7.0	13.03	42.5	F	G1
8102.600	IN	Kappa SW 2.4 20V	838 A2.000	7757053	7.0	13.03	42.5	F	G1
8105.600	EX	Kappa SW 2.4 20V	838 A2.000	7779402	7.0	13.03	46.0	F	G1
8102.600	IN	Kappa SW 2.4 20V	838 A2.027	60811087	7.0	13.03	42.5	F	G1
8105.600	EX	Kappa SW 2.4 20V	838 A2.027	60811090	7.0	13.03	46.0	F	G1
8105.600	EX	Kappa SW 2.4 20V	838 A2.027	60811091	7.0	13.03	46.0	F	G1
8102.600	IN	Kappa SW 2.4 20V	838 A2.027	7756897	7.0	13.03	42.5	F	G1
8102.600	IN	Kappa SW 2.4 20V	838 A2.027	7757053	7.0	13.03	42.5	F	G1
8105.600	EX	Kappa SW 2.4 20V	838 A2.027	7779402	7.0	13.03	46.0	F	G1
8105.600	EX	LYBRA 1.8 16V	839 A4 000	60811090	7.0	13.03	46.0	F	G1
8105.600	EX	LYBRA 1.8 16V	839 A4 000	60811091	7.0	13.03	46.0	F	G1
8105.600	EX	LYBRA 1.8 16V	839 A4 000	7779402	7.0	13.03	46.0	F	G1
8102.600	IN	Lybra 1.8 16V	839 A4.000	60811087	7.0	13.03	42.5	F	G1
8105.600	EX	Lybra 1.8 16V	839 A4.000	60811090	7.0	13.03	46.0	F	G1
8105.600	EX	Lybra 1.8 16V	839 A4.000	60811091	7.0	13.03	46.0	F	G1
8102.600	IN	Lybra 1.8 16V	839 A4.000	7756897	7.0	13.03	42.5	F	G1
8102.600	IN	Lybra 1.8 16V	839 A4.000	7757053	7.0	13.03	42.5	F	G1
8105.600	EX	Lybra 1.8 16V	839 A4.000	7779402	7.0	13.03	46.0	F	G1
8102.600	IN	Lybra 1.8 16V	839 A7.000	60811087	7.0	13.03	42.5	F	G1
8105.600	EX	Lybra 1.8 16V	839 A7.000	60811090	7.0	13.03	46.0	F	G1
8105.600	EX	Lybra 1.8 16V	839 A7.000	60811091	7.0	13.03	46.0	F	G1
8102.600	IN	Lybra 1.8 16V	839 A7.000	7756897	7.0	13.03	42.5	F	G1
8102.600	IN	Lybra 1.8 16V	839 A7.000	7757053	7.0	13.03	42.5	F	G1
8105.600	EX	Lybra 1.8 16V	839 A7.000	7779402	7.0	13.03	46.0	F	G1
8105.600	EX	LYBRA 2.0 20V	182 B7 000	60811090	7.0	13.03	46.0	F	G1
8105.600	EX	LYBRA 2.0 20V	182 B7 000	60811091	7.0	13.03	46.0	F	G1
8105.600	EX	LYBRA 2.0 20V	182 B7 000	7779402	7.0	13.03	46.0	F	G1
8102.600	IN	Lybra 2.0 20V	182 B7.000	60811087	7.0	13.03	42.5	F	G1
8105.600	EX	Lybra 2.0 20V	182 B7.000	60811090	7.0	13.03	46.0	F	G1
8105.600	EX	Lybra 2.0 20V	182 B7.000	60811091	7.0	13.03	46.0	F	G1
8102.600	IN	Lybra 2.0 20V	182 B7.000	7756897	7.0	13.03	42.5	F	G1
8102.600	IN	Lybra 2.0 20V	182 B7.000	7757053	7.0	13.03	42.5	F	G1
8105.600	EX	Lybra 2.0 20V	182 B7.000	7779402	7.0	13.03	46.0	F	G1
8102.600	IN	Lybra 2.0 20V	185 A8.000	60811087	7.0	13.03	42.5	F	G1

(D1) Internal diameter, (D2) External diameter, (B) Shape, (C) Material

VALVE GUIDES

LANCIA

IVT Ref.	Type	Model	Engine	OEM Ref.	D1	D2	Length	B	C
8105.600	EX	Lybra 2.0 20V	185 A8.000	60811090	7.0	13.03	46.0	F	G1
8105.600	EX	Lybra 2.0 20V	185 A8.000	60811091	7.0	13.03	46.0	F	G1
8102.600	IN	Lybra 2.0 20V	185 A8.000	7756897	7.0	13.03	42.5	F	G1
8102.600	IN	Lybra 2.0 20V	185 A8.000	7757053	7.0	13.03	42.5	F	G1
8105.600	EX	Lybra 2.0 20V	185 A8.000	7779402	7.0	13.03	46.0	F	G1
8102.600	IN	Lybra SW 1.8 16V	839 A4.000	60811087	7.0	13.03	42.5	F	G1
8105.600	EX	Lybra SW 1.8 16V	839 A4.000	60811090	7.0	13.03	46.0	F	G1
8105.600	EX	Lybra SW 1.8 16V	839 A4.000	60811091	7.0	13.03	46.0	F	G1
8102.600	IN	Lybra SW 1.8 16V	839 A4.000	7756897	7.0	13.03	42.5	F	G1
8102.600	IN	Lybra SW 1.8 16V	839 A4.000	7757053	7.0	13.03	42.5	F	G1
8105.600	EX	Lybra SW 1.8 16V	839 A4.000	7779402	7.0	13.03	46.0	F	G1
8102.600	IN	Lybra SW 1.8 16V	839 A7.000	60811087	7.0	13.03	42.5	F	G1
8105.600	EX	Lybra SW 1.8 16V	839 A7.000	60811090	7.0	13.03	46.0	F	G1
8105.600	EX	Lybra SW 1.8 16V	839 A7.000	60811091	7.0	13.03	46.0	F	G1
8102.600	IN	Lybra SW 1.8 16V	839 A7.000	7756897	7.0	13.03	42.5	F	G1
8102.600	IN	Lybra SW 1.8 16V	839 A7.000	7757053	7.0	13.03	42.5	F	G1
8105.600	EX	Lybra SW 1.8 16V	839 A7.000	7779402	7.0	13.03	46.0	F	G1
8102.600	IN	Lybra SW 2.0 20V	182 B7.000	60811087	7.0	13.03	42.5	F	G1
8105.600	EX	Lybra SW 2.0 20V	182 B7.000	60811090	7.0	13.03	46.0	F	G1
8105.600	EX	Lybra SW 2.0 20V	182 B7.000	60811091	7.0	13.03	46.0	F	G1
8102.600	IN	Lybra SW 2.0 20V	182 B7.000	7756897	7.0	13.03	42.5	F	G1
8102.600	IN	Lybra SW 2.0 20V	182 B7.000	7757053	7.0	13.03	42.5	F	G1
8105.600	EX	Lybra SW 2.0 20V	182 B7.000	7779402	7.0	13.03	46.0	F	G1
8102.600	IN	Lybra SW 2.0 20V	185 A8.000	60811087	7.0	13.03	42.5	F	G1
8105.600	EX	Lybra SW 2.0 20V	185 A8.000	60811090	7.0	13.03	46.0	F	G1
8105.600	EX	Lybra SW 2.0 20V	185 A8.000	60811091	7.0	13.03	46.0	F	G1
8102.600	IN	Lybra SW 2.0 20V	185 A8.000	7756897	7.0	13.03	42.5	F	G1
8102.600	IN	Lybra SW 2.0 20V	185 A8.000	7757053	7.0	13.03	42.5	F	G1
8105.600	EX	Lybra SW 2.0 20V	185 A8.000	7779402	7.0	13.03	46.0	F	G1
8186.105	IN-EX	MUSA (350), 1.6 D Multijet	350 A2.000	55210016	5.0	10.03	46.7	A	S06
8186.105	IN-EX	MUSA (350), 1.6 D Multijet	350 A3.000/350 A2.000	55210016	5.0	10.03	46.7	A	S06
8140.600	IN-EX	MUSA (350_), 1.4	192 B2.000	46441525	6.0	10.03	39.7	F	G1
8008.605	IN-EX	Musa 1.4	350 A1.000	55190559	5.0	10.03	44.0	F	S06
8008.605	IN-EX	Musa 1.4	350 A1.000	55190561	5.0	10.03	44.0	F	S06
8000.605	IN-EX	Musa 1.4	843 A1.000	46441525	6.0	10.03	39.7	F	S06
8008.605	IN-EX	Musa 1.4 LPG	350 A1.000	55190559	5.0	10.03	44.0	F	S06
8008.605	IN-EX	Musa 1.4 LPG	350 A1.000	55190561	5.0	10.03	44.0	F	S06
8127.905	IN-EX	PHEDRA (179_), 2.0 (179AXA11)	RFN (EW10J4)	022124	6.0	12.06	40.8	P	S06
8006.105	IN-EX	Phedra 2.2 D Multijet	4HT	0220A2	6.0	10.06	41.5	A	S06
8006.105	IN-EX	Phedra 2.2 D Multijet	4HT	0220A2	6.0	10.06	41.5	A	S06
8006.105	IN-EX	Phedra 2.2 D Multijet	4HT	9640340380	6.0	10.06	41.5	A	S06
8006.105	IN-EX	Phedra 2.2 D Multijet	4HT	9640340380	6.0	10.06	41.5	A	S06
8146.600	IN-EX	PRISMA (831_), 1.5	831 A1.000		8.0	14.06	46.5	F	G
8146.600	IN-EX	PRISMA (831_), 1.5	831 B1.000		8.0	14.06	46.5	F	G
8146.600	IN-EX	PRISMA (831_), 1.6	831 A4.000		8.0	14.06	46.5	F	G
8146.600	IN-EX	PRISMA (831_), 1.6 i.e.	831 B7.000		8.0	14.06	46.5	F	G
8146.600	IN-EX	PRISMA (831_), 1.6 i.e. Super	149 C2.000		8.0	14.06	46.5	F	G
8146.600	IN-EX	PRISMA (831_), 1.9 Turbo Diesel	831 D1.000		8.0	14.06	46.5	F	G
8146.600	IN-EX	PRISMA (831_), 2.0 i.e. Allrad	831 B4.000		8.0	14.06	46.5	F	G
8141.100	IN-EX	THEMA (834_), 2500 Turbo D (83	8144.91	4726483	8.0	13.03	60.0	A	G1
8095.600	IN-EX	Thema 2500 Turbo D	8144.91	4749395	8.0	13.03	56.0	F	G1
8095.600	IN-EX	Thema 2500 Turbo D	8144.91.2200	4749395	8.0	13.03	56.0	F	G1
8095.600	IN-EX	Thema 2500 Turbo DS	8144.91.2200	4749395	8.0	13.03	56.0	F	G1
8095.600	IN-EX	Thema 2500 Turbo DS	8144.91.2200	4749395	8.0	13.03	56.0	F	G1
8095.600	IN-EX	Thema 2500 Turbo DS	8144.97	4749395	8.0	13.03	56.0	F	G1
8095.600	IN-EX	Thema 2500 Turbo DS	8144.97Y	4749395	8.0	13.03	56.0	F	G1
8141.100	IN-EX	THEMA SW (834_), 2500 Turbo D	8144.91	4726483	8.0	13.03	60.0	A	G1
8095.600	IN-EX	Thema SW 2500 Turbo DS	8144.91	4749395	8.0	13.03	56.0	F	G1
8095.600	IN-EX	Thema SW 2500 Turbo DS	8144.91.2200	4749395	8.0	13.03	56.0	F	G1
8095.600	IN-EX	Thema SW 2500 Turbo DS	8144.91.2200	4749395	8.0	13.03	56.0	F	G1
8095.600	IN-EX	Thema SW 2500 Turbo DS	8144.97Y	4749395	8.0	13.03	56.0	F	G1
8186.105	IN-EX	THESIS (841AX), 2.4 JTD	841 G.000	55210016	5.0	10.03	46.7	A	S06

(D1) Internal diameter, (D2) External diameter, (B) Shape, (C) Material

VALVE GUIDES

IVT Ref.	Type	Model	Engine	OEM Ref.	D1	D2	Length	B	C
LANCIA									
8102.600	IN	Thesis 2.0 Turbo	841 E.000	60811087	7.0	13.03	42.5	F	G1
8105.600	EX	Thesis 2.0 Turbo	841 E.000	60811090	7.0	13.03	46.0	F	G1
8105.600	EX	Thesis 2.0 Turbo	841 E.000	60811091	7.0	13.03	46.0	F	G1
8102.600	IN	Thesis 2.0 Turbo	841 E.000	7756897	7.0	13.03	42.5	F	G1
8102.600	IN	Thesis 2.0 Turbo	841 E.000	7757053	7.0	13.03	42.5	F	G1
8105.600	EX	Thesis 2.0 Turbo	841 E.000	7779402	7.0	13.03	46.0	F	G1
8102.600	IN	Thesis 2.4	841 D.000	60811087	7.0	13.03	42.5	F	G1
8105.600	EX	Thesis 2.4	841 D.000	60811090	7.0	13.03	46.0	F	G1
8105.600	EX	Thesis 2.4	841 D.000	60811091	7.0	13.03	46.0	F	G1
8102.600	IN	Thesis 2.4	841 D.000	7756897	7.0	13.03	42.5	F	G1
8102.600	IN	Thesis 2.4	841 D.000	7757053	7.0	13.03	42.5	F	G1
8105.600	EX	Thesis 2.4	841 D.000	7779402	7.0	13.03	46.0	F	G1
8140.600	IN-EX	Y (840_), 1.2 16V (840AD)	176 B9.000	46441525	6.0	10.03	39.7	F	G1
8197.605	IN-EX	Y (840A), 1.1 (840AE)	176 B2.000	46515713	7.0	13.03	40.0	F	S06
8197.605	IN-EX	Y (840A), 1.1 (840AE)	176 B2.000	7765039	7.0	13.03	40.0	F	S06
8197.605	IN-EX	Y (840A), 1.2 (840AA, 840AF1A)	840 A3.000/188 A4.000	46515713	7.0	13.03	40.0	F	S06
8197.605	IN-EX	Y (840A), 1.2 (840AA, 840AF1A)	840 A3.000/188 A4.000	7765039	7.0	13.03	40.0	F	S06
8197.605	IN-EX	Y10 (156), 1.1 Avenue (156AG)	176 B2.000	46515713	7.0	13.03	40.0	F	S06
8197.605	IN-EX	Y10 (156), 1.1 Avenue (156AG)	176 B2.000	7765039	7.0	13.03	40.0	F	S06
8197.605	IN-EX	Y10 (156), 1.1 Avenue Allrad (156	176 B2.000	46515713	7.0	13.03	40.0	F	S06
8197.605	IN-EX	Y10 (156), 1.1 Avenue Allrad (156	176 B2.000	7765039	7.0	13.03	40.0	F	S06
8197.605	IN-EX	YPSILON (843), 1.2	188 A4.000	46515713	7.0	13.03	40.0	F	S06
8197.605	IN-EX	YPSILON (843), 1.2	188 A4.000	7765039	7.0	13.03	40.0	F	S06
8003.104	IN-EX	Ypsilon 0.9 CNG	312 A2.000	71769214	5.0	9.06	40.5	A	S03
8003.104	IN-EX	Ypsilon 0.9 CNG	312 A2.000	71769215	5.0	9.06	40.5	A	S03
8003.104	IN-EX	Ypsilon 0.9 Twinair	312 A2.000	71769214	5.0	9.06	40.5	A	S03
8003.104	IN-EX	Ypsilon 0.9 Twinair	312 A2.000	71769215	5.0	9.06	40.5	A	S03
8000.605	IN-EX	Ypsilon 1.2 16V	188 A5.000	46441525	6.0	10.03	39.7	F	S06
8000.605	IN-EX	Ypsilon 1.4 16V	843 A1.000	46441525	6.0	10.03	39.7	F	S06
8008.605	IN-EX	Ypsilon 1.4 LPG	350 A1.000	55190559	5.0	10.03	44.0	F	S06
8008.605	IN-EX	Ypsilon 1.4 LPG	350 A1.000	55190561	5.0	10.03	44.0	F	S06
8154.601	IN-EX	ZETA (22_), 2.0 16V (220AL5)	RFV (XU10J4R)	022119	7.0	12.07	40.0	F	B
8127.905	IN-EX	ZETA (22_), 2.0 16V (220AL5)	RFV (XU10J4R)	022124	6.0	12.06	40.8	P	S06
8127.905	IN-EX	ZETA (22_), 2.0 16V (220AQ5)	RFN	022124	6.0	12.06	40.8	P	S06
LAND ROVER									
8006.105	IN-EX	Freelander 2 2.2 eD4	224DT	0220A2	6.0	10.06	41.5	A	S06
8006.105	IN-EX	Freelander 2 2.2 eD4	224DT	0220A2	6.0	10.06	41.5	A	S06
8006.105	IN-EX	Freelander 2 2.2 eD4	224DT	9640340380	6.0	10.06	41.5	A	S06
8006.105	IN-EX	Freelander 2 2.2 eD4	224DT	9640340380	6.0	10.06	41.5	A	S06
8006.105	IN-EX	Freelander 2 2.2 SD4 4x4	224DT	0220A2	6.0	10.06	41.5	A	S06
8006.105	IN-EX	Freelander 2 2.2 SD4 4x4	224DT	0220A2	6.0	10.06	41.5	A	S06
8006.105	IN-EX	Freelander 2 2.2 SD4 4x4	224DT	9640340380	6.0	10.06	41.5	A	S06
8006.105	IN-EX	Freelander 2 2.2 SD4 4x4	224DT	9640340380	6.0	10.06	41.5	A	S06
8006.105	IN-EX	Freelander 2 2.2 TD4 4x4	224DT	0220A2	6.0	10.06	41.5	A	S06
8006.105	IN-EX	Freelander 2 2.2 TD4 4x4	224DT	0220A2	6.0	10.06	41.5	A	S06
8006.105	IN-EX	Freelander 2 2.2 TD4 4x4	224DT	9640340380	6.0	10.06	41.5	A	S06
8006.105	IN-EX	Freelander 2 2.2 TD4 4x4	224DT	9640340380	6.0	10.06	41.5	A	S06
8006.105	IN-EX	Range Rover Evoque 2.2 eD4	224DT	0220A2	6.0	10.06	41.5	A	S06
8006.105	IN-EX	Range Rover Evoque 2.2 eD4	224DT	0220A2	6.0	10.06	41.5	A	S06
8006.105	IN-EX	Range Rover Evoque 2.2 eD4	224DT	9640340380	6.0	10.06	41.5	A	S06
8006.105	IN-EX	Range Rover Evoque 2.2 eD4	224DT	9640340380	6.0	10.06	41.5	A	S06
8006.105	IN-EX	Range Rover Evoque 2.2 SD4 4x4	224DT	0220A2	6.0	10.06	41.5	A	S06
8006.105	IN-EX	Range Rover Evoque 2.2 SD4 4x4	224DT	0220A2	6.0	10.06	41.5	A	S06
8006.105	IN-EX	Range Rover Evoque 2.2 SD4 4x4	224DT	9640340380	6.0	10.06	41.5	A	S06
8006.105	IN-EX	Range Rover Evoque 2.2 SD4 4x4	224DT	9640340380	6.0	10.06	41.5	A	S06
8006.105	IN-EX	Range Rover Evoque 2.2 TD4 4x4	224DT	0220A2	6.0	10.06	41.5	A	S06
8006.105	IN-EX	Range Rover Evoque 2.2 TD4 4x4	224DT	0220A2	6.0	10.06	41.5	A	S06
8006.105	IN-EX	Range Rover Evoque 2.2 TD4 4x4	224DT	9640340380	6.0	10.06	41.5	A	S06
8006.105	IN-EX	Range Rover Evoque 2.2 TD4 4x4	224DT	9640340380	6.0	10.06	41.5	A	S06
LEXUS									

(D1) Internal diameter, (D2) External diameter, (B) Shape, (C) Material

VALVE GUIDES

IVT Ref.	Type	Model	Engine	OEM Ref.	D1	D2	Length	B	C
LEXUS									
8152.900	IN-EX	GS (GRS19_, UZS19_, URS19_),	3UZ-FE	1112220020	5.5	10.34	34.5	P	G
8152.900	IN-EX	GS (GRS19_, UZS19_, URS19_),	3UZ-FE	1112222030	5.5	10.34	34.5	P	G
8152.900	IN-EX	GS (JZS160_, UZS161_, UZS160	3UZ-FE	1112220020	5.5	10.34	34.5	P	G
8152.900	IN-EX	GS (JZS160_, UZS161_, UZS160	3UZ-FE	1112222030	5.5	10.34	34.5	P	G
8011.904	IN-EX	IS II 220d	2AD-FHV	111220R010	6.0	11.04	40.6	P	S03
8011.904	IN-EX	IS II 220d	2AD-FHV	1112227010	6.0	11.04	40.6	P	S03
8152.900	IN-EX	LS (UCF30), 430	3UZ-FE	1112220020	5.5	10.34	34.5	P	G
8152.900	IN-EX	LS (UCF30), 430	3UZ-FE	1112222030	5.5	10.34	34.5	P	G
8152.900	IN-EX	LX (UZJ100), 470	2UZ-FE	1112220020	5.5	10.34	34.5	P	G
8152.900	IN-EX	LX (UZJ100), 470	2UZ-FE	1112222030	5.5	10.34	34.5	P	G
8152.900	IN-EX	RX (MCU15), 300 AWD	1MZ-FE	1112220020	5.5	10.34	34.5	P	G
8152.900	IN-EX	RX (MCU15), 300 AWD	1MZ-FE	1112222030	5.5	10.34	34.5	P	G
8152.900	IN-EX	RX (MHU3_, GSU3_, MCU3_), 30	1MZ-FE	1112220020	5.5	10.34	34.5	P	G
8152.900	IN-EX	RX (MHU3_, GSU3_, MCU3_), 30	1MZ-FE	1112222030	5.5	10.34	34.5	P	G
8152.900	IN-EX	SC (UZZ40_), 430 (UZZ40L_, UZ	3UZ-FE	1112220020	5.5	10.34	34.5	P	G
8152.900	IN-EX	SC (UZZ40_), 430 (UZZ40L_, UZ	3UZ-FE	1112220020	5.5	10.34	34.5	P	G
8152.900	IN-EX	SC (UZZ40_), 430 (UZZ40L_, UZ	3UZ-FE	1112222030	5.5	10.34	34.5	P	G
8152.900	IN-EX	SC (UZZ40_), 430 (UZZ40L_, UZ	3UZ-FE	1112222030	5.5	10.34	34.5	P	G
MAZDA									
8142.900	EX	121 II (DB), 1.3 16V	B3 (16V)	B3Y010290	6.0	11.05	48.6	P-1-6	G1
8142.900	EX	121 II (DB), 1.3 16V	B3 (16V)	B6Z010290	6.0	11.05	48.6	P-1-6	G1
8142.900	EX	121 II (DB), 1.3 i 16V	B3 (16V)	B3Y010290	6.0	11.05	48.6	P-1-6	G1
8142.900	EX	121 II (DB), 1.3 i 16V	B3 (16V)	B6Z010290	6.0	11.05	48.6	P-1-6	G1
8142.900	EX	121 III (JASM, JBSM), 1.25	DHG/DHF	B3Y010290	6.0	11.05	48.6	P-1-6	G1
8142.900	EX	121 III (JASM, JBSM), 1.25	DHG/DHF	B6Z010290	6.0	11.05	48.6	P-1-6	G1
8142.900	EX	121 III (JASM, JBSM), 1.3	J4R/J4T	B3Y010290	6.0	11.05	48.6	P-1-6	G1
8142.900	EX	121 III (JASM, JBSM), 1.3	J4R/J4T	B6Z010290	6.0	11.05	48.6	P-1-6	G1
8142.900	EX	121 III (JASM, JBSM), 1.3	JJM/JJK	B3Y010290	6.0	11.05	48.6	P-1-6	G1
8142.900	EX	121 III (JASM, JBSM), 1.3	JJM/JJK	B6Z010290	6.0	11.05	48.6	P-1-6	G1
8165.104	IN-EX	2 (DY), 1.4 CD	F6JA/F6JB	0220A6	5.5	9.55	34.0	A	S03
8166.100	IN-EX	2 (DY), 1.6	FYJA		6.1	12.03	36.0	A	G1
8129.104	IN-EX	3 (BK), 1.4	ZJ-VE	LFY110281	5.5	11.05	39.0	A	S03
8129.104	IN-EX	3 (BK), 1.4	ZJ-VE	ZJY110281	5.5	11.05	39.0	A	S03
8129.104	IN-EX	3 (BK), 1.6	B6ZE	LFY110281	5.5	11.05	39.0	A	S03
8129.104	IN-EX	3 (BK), 1.6	B6ZE	ZJY110281	5.5	11.05	39.0	A	S03
8165.104	IN-EX	3 (BK), 1.6 DI Turbo	Y601	0220A6	5.5	9.55	34.0	A	S03
8165.104	IN-EX	3 (BK), 1.6 MZ-CD	Y406	0220A6	5.5	9.55	34.0	A	S03
8182.900	IN-EX	3 (BK), 2.0 MZR-CD	RF7J	RFY110291	6.1	11.04	45.0	P	G
8129.104	IN-EX	3 (BL), 2.0 MZR	LF17/LF-DE	LFY110281	5.5	11.05	39.0	A	S03
8129.104	IN-EX	3 (BL), 2.0 MZR	LF17/LF-DE	ZJY110281	5.5	11.05	39.0	A	S03
8129.104	IN-EX	3 (BL), 2.0 MZR DISI	LF5W/LF5H	LFY110281	5.5	11.05	39.0	A	S03
8129.104	IN-EX	3 (BL), 2.0 MZR DISI	LF5W/LF5H	ZJY110281	5.5	11.05	39.0	A	S03
8129.104	IN-EX	3 Stufenheck (BK), 1.6	Z6	LFY110281	5.5	11.05	39.0	A	S03
8129.104	IN-EX	3 Stufenheck (BK), 1.6	Z6	ZJY110281	5.5	11.05	39.0	A	S03
8165.104	IN-EX	3 Stufenheck (BK), 1.6 DI Turbo	Y601	0220A6	5.5	9.55	34.0	A	S03
8182.900	IN-EX	3 Stufenheck (BK), 2.0 MZR-CD	RF7J	RFY110291	6.1	11.04	45.0	P	G
8129.104	IN-EX	3 Stufenheck (BL), 2.0 MZR	LF17/LF-DE	LFY110281	5.5	11.05	39.0	A	S03
8129.104	IN-EX	3 Stufenheck (BL), 2.0 MZR	LF17/LF-DE	ZJY110281	5.5	11.05	39.0	A	S03
8129.104	IN-EX	3 Stufenheck (BL), 2.0 MZR DISI	LF5W/LF5H	LFY110281	5.5	11.05	39.0	A	S03
8129.104	IN-EX	3 Stufenheck (BL), 2.0 MZR DISI	LF5W/LF5H	ZJY110281	5.5	11.05	39.0	A	S03
8142.900	EX	323 C IV (BG), 1.3	B3E	B3Y010290	6.0	11.05	48.6	P-1-6	G1
8142.900	EX	323 C IV (BG), 1.3	B3E	B6Z010290	6.0	11.05	48.6	P-1-6	G1
8142.900	EX	323 C IV (BG), 1.3 16V	B3 (16V)	B3Y010290	6.0	11.05	48.6	P-1-6	G1
8142.900	EX	323 C IV (BG), 1.3 16V	B3 (16V)	B6Z010290	6.0	11.05	48.6	P-1-6	G1
8142.900	EX	323 C IV (BG), 1.6	B6E	B3Y010290	6.0	11.05	48.6	P-1-6	G1
8142.900	EX	323 C IV (BG), 1.6	B6E	B6Z010290	6.0	11.05	48.6	P-1-6	G1
8142.900	EX	323 C IV (BG), 1.8 16V	BP22/BP31	B3Y010290	6.0	11.05	48.6	P-1-6	G1
8142.900	EX	323 C IV (BG), 1.8 16V	BP22/BP31	B6Z010290	6.0	11.05	48.6	P-1-6	G1
8142.900	EX	323 C IV (BG), 1.8 16V 4WD	BP	B3Y010290	6.0	11.05	48.6	P-1-6	G1
8142.900	EX	323 C IV (BG), 1.8 16V 4WD	BP	B6Z010290	6.0	11.05	48.6	P-1-6	G1
8142.900	EX	323 C V (BA), 1.3 16V	B3 (16V)	B3Y010290	6.0	11.05	48.6	P-1-6	G1

(D1) Internal diameter, (D2) External diameter, (B) Shape, (C) Material

VALVE GUIDES

IVT Ref.	Type	Model	Engine	OEM Ref.	D1	D2	Length	B	C
MAZDA									
8142.900	EX	323 C V (BA), 1.3 16V	B3 (16V)	B6Z010290	6.0	11.05	48.6	P-1-6	G1
8142.900	EX	323 C V (BA), 1.8 16V	BP-ZE	B3Y010290	6.0	11.05	48.6	P-1-6	G1
8142.900	EX	323 C V (BA), 1.8 16V	BP-ZE	B6Z010290	6.0	11.05	48.6	P-1-6	G1
8142.900	EX	323 F IV (BG), 1.6	B6E	B3Y010290	6.0	11.05	48.6	P-1-6	G1
8142.900	EX	323 F IV (BG), 1.6	B6E	B6Z010290	6.0	11.05	48.6	P-1-6	G1
8142.900	EX	323 F IV (BG), 1.8 16V	BP	B3Y010290	6.0	11.05	48.6	P-1-6	G1
8142.900	EX	323 F IV (BG), 1.8 16V	BP	B6Z010290	6.0	11.05	48.6	P-1-6	G1
8142.900	EX	323 F IV (BG), 1.8 16V	BP31	B3Y010290	6.0	11.05	48.6	P-1-6	G1
8142.900	EX	323 F IV (BG), 1.8 16V	BP31	B6Z010290	6.0	11.05	48.6	P-1-6	G1
8142.900	EX	323 F IV (BG), 1.8 4WD	BPC	B3Y010290	6.0	11.05	48.6	P-1-6	G1
8142.900	EX	323 F IV (BG), 1.8 4WD	BPC	B6Z010290	6.0	11.05	48.6	P-1-6	G1
8142.900	EX	323 F V (BA), 1.8 16V	BP-ZE	B3Y010290	6.0	11.05	48.6	P-1-6	G1
8142.900	EX	323 F V (BA), 1.8 16V	BP-ZE	B6Z010290	6.0	11.05	48.6	P-1-6	G1
8142.900	EX	323 F VI (BJ), 1.4	B3 (16V)	B3Y010290	6.0	11.05	48.6	P-1-6	G1
8142.900	EX	323 F VI (BJ), 1.4	B3 (16V)	B6Z010290	6.0	11.05	48.6	P-1-6	G1
8142.900	EX	323 F VI (BJ), 1.4 16V	B3 ME	B3Y010290	6.0	11.05	48.6	P-1-6	G1
8142.900	EX	323 F VI (BJ), 1.4 16V	B3 ME	B6Z010290	6.0	11.05	48.6	P-1-6	G1
8182.900	IN-EX	323 F VI (BJ), 2.0 TD	-	RFY110291	6.1	11.04	45.0	P	G
8182.900	IN-EX	323 F VI (BJ), 2.0 TD	RF4F	RFY110291	6.1	11.04	45.0	P	G
8142.900	EX	323 III (BF), 1.5	B5	B3Y010290	6.0	11.05	48.6	P-1-6	G1
8142.900	EX	323 III (BF), 1.5	B5	B6Z010290	6.0	11.05	48.6	P-1-6	G1
8142.900	EX	323 III (BF), 1.6 GT Turbo	B6T	B3Y010290	6.0	11.05	48.6	P-1-6	G1
8142.900	EX	323 III (BF), 1.6 GT Turbo	B6T	B6Z010290	6.0	11.05	48.6	P-1-6	G1
8142.900	EX	323 III Hatchback (BF), 1.5	B5	B3Y010290	6.0	11.05	48.6	P-1-6	G1
8142.900	EX	323 III Hatchback (BF), 1.5	B5	B6Z010290	6.0	11.05	48.6	P-1-6	G1
8142.900	EX	323 III Hatchback (BF), 1.6 GT Tu	B6T	B3Y010290	6.0	11.05	48.6	P-1-6	G1
8142.900	EX	323 III Hatchback (BF), 1.6 GT Tu	B6T	B6Z010290	6.0	11.05	48.6	P-1-6	G1
8142.900	EX	323 III Hatchback (BF), 1.6 GT Tu	B6F2	B3Y010290	6.0	11.05	48.6	P-1-6	G1
8142.900	EX	323 III Hatchback (BF), 1.6 GT Tu	B6F2	B6Z010290	6.0	11.05	48.6	P-1-6	G1
8142.900	EX	323 III Hatchback (BF), 1.6 GT Tu	B6T	B3Y010290	6.0	11.05	48.6	P-1-6	G1
8142.900	EX	323 III Hatchback (BF), 1.6 GT Tu	B6T	B6Z010290	6.0	11.05	48.6	P-1-6	G1
8142.900	EX	323 III Station Wagon (BW), 1.5	B50/B53/B5	B3Y010290	6.0	11.05	48.6	P-1-6	G1
8142.900	EX	323 III Station Wagon (BW), 1.5	B50/B53/B5	B6Z010290	6.0	11.05	48.6	P-1-6	G1
8142.900	EX	323 P V (BA), 1.3 16V	B3 (16V)	B3Y010290	6.0	11.05	48.6	P-1-6	G1
8142.900	EX	323 P V (BA), 1.3 16V	B3 (16V)	B6Z010290	6.0	11.05	48.6	P-1-6	G1
8142.900	EX	323 S IV (BG), 1.3	B3E/B383	B3Y010290	6.0	11.05	48.6	P-1-6	G1
8142.900	EX	323 S IV (BG), 1.3	B3E/B383	B6Z010290	6.0	11.05	48.6	P-1-6	G1
8142.900	EX	323 S IV (BG), 1.3 16V	B3 (16V)	B3Y010290	6.0	11.05	48.6	P-1-6	G1
8142.900	EX	323 S IV (BG), 1.3 16V	B3 (16V)	B6Z010290	6.0	11.05	48.6	P-1-6	G1
8142.900	EX	323 S IV (BG), 1.6	B6E	B3Y010290	6.0	11.05	48.6	P-1-6	G1
8142.900	EX	323 S IV (BG), 1.6	B6E	B6Z010290	6.0	11.05	48.6	P-1-6	G1
8142.900	EX	323 S IV (BG), 1.8 16V	BP52	B3Y010290	6.0	11.05	48.6	P-1-6	G1
8142.900	EX	323 S IV (BG), 1.8 16V	BP52	B6Z010290	6.0	11.05	48.6	P-1-6	G1
8142.900	EX	323 S IV (BG), 1.8 16V 4WD	BP52	B3Y010290	6.0	11.05	48.6	P-1-6	G1
8142.900	EX	323 S IV (BG), 1.8 16V 4WD	BP52	B6Z010290	6.0	11.05	48.6	P-1-6	G1
8142.900	EX	323 S V (BA), 1.3 16V	B3 (16V)	B3Y010290	6.0	11.05	48.6	P-1-6	G1
8142.900	EX	323 S V (BA), 1.3 16V	B3 (16V)	B6Z010290	6.0	11.05	48.6	P-1-6	G1
8142.900	EX	323 S V (BA), 1.8 16V	BP-ZE	B3Y010290	6.0	11.05	48.6	P-1-6	G1
8142.900	EX	323 S V (BA), 1.8 16V	BP-ZE	B6Z010290	6.0	11.05	48.6	P-1-6	G1
8142.900	EX	323 S VI (BJ), 1.4	B3 (16V)	B3Y010290	6.0	11.05	48.6	P-1-6	G1
8142.900	EX	323 S VI (BJ), 1.4	B3 (16V)	B6Z010290	6.0	11.05	48.6	P-1-6	G1
8142.900	EX	323 S VI (BJ), 1.4 16V	B3 ME	B3Y010290	6.0	11.05	48.6	P-1-6	G1
8142.900	EX	323 S VI (BJ), 1.4 16V	B3 ME	B6Z010290	6.0	11.05	48.6	P-1-6	G1
8182.900	IN-EX	323 S VI (BJ), 2.0 TD	RF3F	RFY110291	6.1	11.04	45.0	P	G
8129.104	IN-EX	5 (CR19), 1.8	L823	LFY110281	5.5	11.05	39.0	A	S03
8129.104	IN-EX	5 (CR19), 1.8	L823	ZJY110281	5.5	11.05	39.0	A	S03
8129.104	IN-EX	5 (CR19), 2.0	LFF7	LFY110281	5.5	11.05	39.0	A	S03
8129.104	IN-EX	5 (CR19), 2.0	LFF7	ZJY110281	5.5	11.05	39.0	A	S03
8182.900	IN-EX	5 (CR19), 2.0 CD	RF7J	RFY110291	6.1	11.04	45.0	P	G
8182.900	IN-EX	5 (CR19), 2.0 CD	RF7J	RFY110291	6.1	11.04	45.0	P	G
8129.104	IN-EX	6 (GG), 1.8	L813/L823/L828	LFY110281	5.5	11.05	39.0	A	S03
8129.104	IN-EX	6 (GG), 1.8	L813/L823/L828	ZJY110281	5.5	11.05	39.0	A	S03

(D1) Internal diameter, (D2) External diameter, (B) Shape, (C) Material

VALVE GUIDES

IVT Ref.	Type	Model	Engine	OEM Ref.	D1	D2	Length	B	C
MAZDA									
8129.104	IN-EX	6 (GG), 2.0	LF18/LF17	LFY110281	5.5	11.05	39.0	A	S03
8129.104	IN-EX	6 (GG), 2.0	LF18/LF17	ZJY110281	5.5	11.05	39.0	A	S03
8129.104	IN-EX	6 (GG), 2.0	LFF7	LFY110281	5.5	11.05	39.0	A	S03
8129.104	IN-EX	6 (GG), 2.0	LFF7	ZJY110281	5.5	11.05	39.0	A	S03
8182.900	IN-EX	6 (GG), 2.0 DI	RF5C	RFY110291	6.1	11.04	45.0	P	G
8182.900	IN-EX	6 (GG), 2.0 DI	RF5C	RFY110291	6.1	11.04	45.0	P	G
8182.900	IN-EX	6 (GG), 2.0 DI	RF7J	RFY110291	6.1	11.04	45.0	P	G
8129.104	IN-EX	6 (GG), 2.3	L3C1	LFY110281	5.5	11.05	39.0	A	S03
8129.104	IN-EX	6 (GG), 2.3	L3C1	ZJY110281	5.5	11.05	39.0	A	S03
8182.900	IN-EX	6 (GH), 2.0 MZR-CD	RF7J	RFY110291	6.1	11.04	45.0	P	G
8129.104	IN-EX	6 Hatchback (GG), 1.8	L813	LFY110281	5.5	11.05	39.0	A	S03
8129.104	IN-EX	6 Hatchback (GG), 1.8	L813	ZJY110281	5.5	11.05	39.0	A	S03
8129.104	IN-EX	6 Hatchback (GG), 2.0	LF18/LF17	LFY110281	5.5	11.05	39.0	A	S03
8129.104	IN-EX	6 Hatchback (GG), 2.0	LF18/LF17	ZJY110281	5.5	11.05	39.0	A	S03
8129.104	IN-EX	6 Hatchback (GG), 2.0	LFF7	LFY110281	5.5	11.05	39.0	A	S03
8129.104	IN-EX	6 Hatchback (GG), 2.0	LFF7	ZJY110281	5.5	11.05	39.0	A	S03
8182.900	IN-EX	6 Hatchback (GG), 2.0 DI	RF5C	RFY110291	6.1	11.04	45.0	P	G
8182.900	IN-EX	6 Hatchback (GG), 2.0 DI	RF5C	RFY110291	6.1	11.04	45.0	P	G
8182.900	IN-EX	6 Hatchback (GG), 2.0 DI	RF7J	RFY110291	6.1	11.04	45.0	P	G
8129.104	IN-EX	6 Hatchback (GG), 2.3	L3C1	LFY110281	5.5	11.05	39.0	A	S03
8129.104	IN-EX	6 Hatchback (GG), 2.3	L3C1	ZJY110281	5.5	11.05	39.0	A	S03
8182.900	IN-EX	6 Kombi (GH), 2.0 MZR-CD	RF7J	RFY110291	6.1	11.04	45.0	P	G
8182.900	IN-EX	6 Schrägheck (GH), 2.0 MZR-CD	RF7J	RFY110291	6.1	11.04	45.0	P	G
8129.104	IN-EX	6 Station Wagon (GY), 1.8	L813	LFY110281	5.5	11.05	39.0	A	S03
8129.104	IN-EX	6 Station Wagon (GY), 1.8	L813	ZJY110281	5.5	11.05	39.0	A	S03
8129.104	IN-EX	6 Station Wagon (GY), 2.0	LF18/LF17	LFY110281	5.5	11.05	39.0	A	S03
8129.104	IN-EX	6 Station Wagon (GY), 2.0	LF18/LF17	ZJY110281	5.5	11.05	39.0	A	S03
8129.104	IN-EX	6 Station Wagon (GY), 2.0	LFF7	LFY110281	5.5	11.05	39.0	A	S03
8129.104	IN-EX	6 Station Wagon (GY), 2.0	LFF7	ZJY110281	5.5	11.05	39.0	A	S03
8182.900	IN-EX	6 Station Wagon (GY), 2.0 CiTD 4	RF5C	RFY110291	6.1	11.04	45.0	P	G
8182.900	IN-EX	6 Station Wagon (GY), 2.0 DI	RF5C	RFY110291	6.1	11.04	45.0	P	G
8182.900	IN-EX	6 Station Wagon (GY), 2.0 DI	RF5C	RFY110291	6.1	11.04	45.0	P	G
8182.900	IN-EX	6 Station Wagon (GY), 2.0 DI	RF7J	RFY110291	6.1	11.04	45.0	P	G
8129.104	IN-EX	6 Station Wagon (GY), 2.3	L3C1	LFY110281	5.5	11.05	39.0	A	S03
8129.104	IN-EX	6 Station Wagon (GY), 2.3	L3C1	ZJY110281	5.5	11.05	39.0	A	S03
8129.104	IN-EX	6 Station Wagon (GY), 2.3 AWD	L3C1	LFY110281	5.5	11.05	39.0	A	S03
8129.104	IN-EX	6 Station Wagon (GY), 2.3 AWD	L3C1	ZJY110281	5.5	11.05	39.0	A	S03
8182.900	IN-EX	626 V (GF), 2.0 DI TD	RF3F	RFY110291	6.1	11.04	45.0	P	G
8182.900	IN-EX	626 V (GF), 2.0 TD	RF59	RFY110291	6.1	11.04	45.0	P	G
8182.900	IN-EX	626 V (GF), 2.0 Turbo DI	-	RFY110291	6.1	11.04	45.0	P	G
8182.900	IN-EX	626 V Hatchback (GF), 2.0 DITD	RF3F	RFY110291	6.1	11.04	45.0	P	G
8182.900	IN-EX	626 V Hatchback (GF), 2.0 TD	-	RFY110291	6.1	11.04	45.0	P	G
8182.900	IN-EX	626 V Hatchback (GF), 2.0 Turbo	-	RFY110291	6.1	11.04	45.0	P	G
8182.900	IN-EX	626 V Station Wagon (GW), 2.0 DI	RF3F	RFY110291	6.1	11.04	45.0	P	G
8182.900	IN-EX	626 V Station Wagon (GW), 2.0 T	-	RFY110291	6.1	11.04	45.0	P	G
8182.900	IN-EX	626 V Station Wagon (GW), 2.0 T	RF4F	RFY110291	6.1	11.04	45.0	P	G
8142.900	EX	DEMIO (DW), 1.3 16V	B3 ME	B3Y010290	6.0	11.05	48.6	P-1-6	G1
8142.900	EX	DEMIO (DW), 1.3 16V	B3 ME	B6Z010290	6.0	11.05	48.6	P-1-6	G1
8142.900	EX	DEMIO (DW), 1.3 i 16V	B3 (16V)	B3Y010290	6.0	11.05	48.6	P-1-6	G1
8142.900	EX	DEMIO (DW), 1.3 i 16V	B3 (16V)	B6Z010290	6.0	11.05	48.6	P-1-6	G1
8142.900	EX	DEMIO (DW), 1.5 16V	B5 E	B3Y010290	6.0	11.05	48.6	P-1-6	G1
8142.900	EX	DEMIO (DW), 1.5 16V	B5 E	B6Z010290	6.0	11.05	48.6	P-1-6	G1
8182.900	IN-EX	MPV II (LW), 2.0 DI	RF5C	RFY110291	6.1	11.04	45.0	P	G
8129.104	IN-EX	MPV II (LW), 2.3	L3	LFY110281	5.5	11.05	39.0	A	S03
8129.104	IN-EX	MPV II (LW), 2.3	L3	ZJY110281	5.5	11.05	39.0	A	S03
8142.900	EX	MX-5 I (NA), 1.6	8AN1	B3Y010290	6.0	11.05	48.6	P-1-6	G1
8142.900	EX	MX-5 I (NA), 1.6	8AN1	B6Z010290	6.0	11.05	48.6	P-1-6	G1
8142.900	EX	MX-5 I (NA), 1.6	B64F	B3Y010290	6.0	11.05	48.6	P-1-6	G1
8142.900	EX	MX-5 I (NA), 1.6	B64F	B6Z010290	6.0	11.05	48.6	P-1-6	G1
8129.104	IN-EX	MX-5 III (NC), 1.8	L8-DE/L828	LFY110281	5.5	11.05	39.0	A	S03
8129.104	IN-EX	MX-5 III (NC), 1.8	L8-DE/L828	ZJY110281	5.5	11.05	39.0	A	S03
8129.104	IN-EX	MX-5 III (NC), 2.0	LF62/LF-DE	LFY110281	5.5	11.05	39.0	A	S03

(D1) Internal diameter, (D2) External diameter, (B) Shape, (C) Material

VALVE GUIDES

IVT Ref.	Type	Model	Engine	OEM Ref.	D1	D2	Length	B	C
MAZDA									
8129.104	IN-EX	MX-5 III (NC), 2.0	LF62/LF-DE	ZJY110281	5.5	11.05	39.0	A	S03
8182.900	IN-EX	PREMACY (CP), 2.0 TD	RF3F	RFY110291	6.1	11.04	45.0	P	G
8182.900	IN-EX	PREMACY (CP), 2.0 TD	RF4F	RFY110291	6.1	11.04	45.0	P	G
8142.900	EX	XEDOS 9 (TA), 2.3 24V	KJ -ZEM	B3Y010290	6.0	11.05	48.6	P-1-6	G1
8142.900	EX	XEDOS 9 (TA), 2.3 24V	KJ -ZEM	B6Z010290	6.0	11.05	48.6	P-1-6	G1
MERCEDES BENZ									
8092.602	IN	190 - 2.0	M102 - 102.924	1020501724	8.0	14.04	46.0	F-1	Cu
8081.602	EX	190 - 2.0	M102 - 102.924	1020501824	9.0	14.04	51.0	F-1	Cu
8168.600	IN	190 (W201), D 2.0 (201.122)	OM 601.911	6010500624	8.0	14.03	39.5	F-1	G
8168.600	IN	190 (W201), D 2.0 (201.122)	OM 601.911	6010500624	8.0	14.03	39.5	F-1	G
8168.600	IN	190 (W201), D 2.0 (201.122)	OM 601.911	6010500824	8.0	14.03	39.5	F-1	G
8168.600	IN	190 (W201), D 2.0 (201.122)	OM 601.911	6010500824	8.0	14.03	39.5	F-1	G
8168.600	IN	190 (W201), D 2.5 (201.126)	OM 602.911	6010500624	8.0	14.03	39.5	F-1	G
8168.600	IN	190 (W201), D 2.5 (201.126)	OM 602.911	6010500624	8.0	14.03	39.5	F-1	G
8168.600	IN	190 (W201), D 2.5 (201.126)	OM 602.911	6010500824	8.0	14.03	39.5	F-1	G
8168.600	IN	190 (W201), D 2.5 (201.126)	OM 602.911	6010500824	8.0	14.03	39.5	F-1	G
8168.600	IN	190 (W201), Turbo-D 2.5 (201.128	OM 602.961	6010500624	8.0	14.03	39.5	F-1	G
8168.600	IN	190 (W201), Turbo-D 2.5 (201.128	OM 602.961	6010500824	8.0	14.03	39.5	F-1	G
8066.600	EX	190 D	OM 601.911	6010500924	9.0	14.03	37.5	F-1	G
8066.600	EX	190 D	OM 601.911	6010501124	9.0	14.03	37.5	F-1	G
8066.600	EX	190 D	OM 602.911	6010500924	9.0	14.03	37.5	F-1	G
8066.600	EX	190 D	OM 602.911	6010501124	9.0	14.03	37.5	F-1	G
8066.600	EX	190 D	OM 602.961	6010500924	9.0	14.03	37.5	F-1	G
8066.600	EX	190 D	OM 602.961	6010501124	9.0	14.03	37.5	F-1	G
8066.600	EX	190 D 2.0	OM 601.911	6010500924	9.0	14.03	37.5	F-1	G
8066.600	EX	190 D 2.0	OM 601.911	6010501124	9.0	14.03	37.5	F-1	G
8066.600	EX	190 D 2.5	OM 602.911	6010500924	9.0	14.03	37.5	F-1	G
8066.600	EX	190 D 2.5	OM 602.911	6010501124	9.0	14.03	37.5	F-1	G
8092.602	IN	190 E - 1.8	M102 - 102.910/.919	1020501724	8.0	14.04	46.0	F-1	Cu
8081.602	EX	190 E - 1.8	M102 - 102.910/.919	1020501824	9.0	14.04	51.0	F-1	Cu
8092.602	IN	190 E - 2.0	M102 - 102.961	1020501724	8.0	14.04	46.0	F-1	Cu
8081.602	EX	190 E - 2.0	M102 - 102.961	1020501824	9.0	14.04	51.0	F-1	Cu
8092.602	IN	190 E - 2.0	M102 - 102.962	1020501724	8.0	14.04	46.0	F-1	Cu
8081.602	EX	190 E - 2.0	M102 - 102.962	1020501824	9.0	14.04	51.0	F-1	Cu
8081.602	EX	190 E - 2.3	M102 - 102.985	1020501824	9.0	14.04	51.0	F-1	Cu
8066.600	EX	190 Turbo D 2.5	OM 602.961	6010500924	9.0	14.03	37.5	F-1	G
8066.600	EX	190 Turbo D 2.5	OM 602.961	6010501124	9.0	14.03	37.5	F-1	G
8092.602	IN	200 / 200 T - 2.0	M102 - 102.920/.939	1020501724	8.0	14.04	46.0	F-1	Cu
8081.602	EX	200 / 200 T - 2.0	M102 - 102.920/.939	1020501824	9.0	14.04	51.0	F-1	Cu
8092.602	IN	200 / 200 T - 2.0	M102 - 102.922	1020501724	8.0	14.04	46.0	F-1	Cu
8081.602	EX	200 / 200 T - 2.0	M102 - 102.922	1020501824	9.0	14.04	51.0	F-1	Cu
8066.600	EX	200 D 3Volumi	OM 601.912	6010500924	9.0	14.03	37.5	F-1	G
8066.600	EX	200 D 3Volumi	OM 601.912	6010501124	9.0	14.03	37.5	F-1	G
8092.602	IN	200 E - 2.0	M102 - 102.963	1020501724	8.0	14.04	46.0	F-1	Cu
8081.602	EX	200 E - 2.0	M102 - 102.963	1020501824	9.0	14.04	51.0	F-1	Cu
8092.602	IN	200 GE 4 x 4 - 2.0	M102 - 102.964/.965	1020501724	8.0	14.04	46.0	F-1	Cu
8081.602	EX	200 GE 4 x 4 - 2.0	M102 - 102.964/.965	1020501824	9.0	14.04	51.0	F-1	Cu
8092.602	IN	200 GE 4 x 4 Cabriolet - 2.0	M102 - 102.965	1020501724	8.0	14.04	46.0	F-1	Cu
8081.602	EX	200 GE 4 x 4 Cabriolet - 2.0	M102 - 102.965	1020501824	9.0	14.04	51.0	F-1	Cu
8066.600	EX	200 T D Combi SW	OM 601.912	6010500924	9.0	14.03	37.5	F-1	G
8066.600	EX	200 T D Combi SW	OM 601.912	6010501124	9.0	14.03	37.5	F-1	G
8081.602	EX	208 / 210 / 308 / 310	M102 - 102.945	1020501824	9.0	14.04	51.0	F-1	Cu
8081.602	EX	208 / 210 / 308 / 310 / 410	M102 - 102.942	1020501824	9.0	14.04	51.0	F-1	Cu
8081.602	EX	230 E / CE / TE - 2.3	M102 - 102.980	1020501824	9.0	14.04	51.0	F-1	Cu
8081.602	EX	230 E / CE / TE - 2.3	M102 - 102.982	1020501824	9.0	14.04	51.0	F-1	Cu
8081.602	EX	230 GE 4 x 4 - 2.3	M102 - 102.958/.987	1020501824	9.0	14.04	51.0	F-1	Cu
8081.602	EX	230 GE 4 x 4 - 2.3	M102 - 102.981/.998	1020501824	9.0	14.04	51.0	F-1	Cu
8081.602	EX	230 GE 4 x 4 Cabriolet - 2.3	M102 - 102.989	1020501824	9.0	14.04	51.0	F-1	Cu
8066.600	EX	250 D 3Volumi	OM 602.912	6010500924	9.0	14.03	37.5	F-1	G
8066.600	EX	250 D 3Volumi	OM 602.912	6010501124	9.0	14.03	37.5	F-1	G
8066.600	EX	250 T D Combi SW	OM 602.912	6010500924	9.0	14.03	37.5	F-1	G

(D1) Internal diameter, (D2) External diameter, (B) Shape, (C) Material

VALVE GUIDES

MERCEDES BENZ

IVT Ref.	Type	Model	Engine	OEM Ref.	D1	D2	Length	B	C
8066.600	EX	250 T D Combi SW	OM 602.912	6010501124	9.0	14.03	37.5	F-1	G
8066.600	EX	250 T D Turbo Combi SW	OM 602.962	6010500924	9.0	14.03	37.5	F-1	G
8066.600	EX	250 T D Turbo Combi SW	OM 602.962	6010501124	9.0	14.03	37.5	F-1	G
8066.600	EX	250 Turbo D 3Volumi	OM 602.962	6010500924	9.0	14.03	37.5	F-1	G
8066.600	EX	250 Turbo D 3Volumi	OM 602.962	6010501124	9.0	14.03	37.5	F-1	G
8066.600	EX	300 D 3Volumi	OM 603.912	6010500924	9.0	14.03	37.5	F-1	G
8066.600	EX	300 D 3Volumi	OM 603.912	6010501124	9.0	14.03	37.5	F-1	G
8066.600	EX	300 D 4matic 3Volumi	OM 603.913	6010500924	9.0	14.03	37.5	F-1	G
8066.600	EX	300 D 4matic 3Volumi	OM 603.913	6010501124	9.0	14.03	37.5	F-1	G
8066.600	EX	300 D 4matic 3Volumi	OM 603.960	6010500924	9.0	14.03	37.5	F-1	G
8066.600	EX	300 D 4matic 3Volumi	OM 603.960	6010501124	9.0	14.03	37.5	F-1	G
8066.600	EX	300 D 4matic 3Volumi	OM 603.963	6010500924	9.0	14.03	37.5	F-1	G
8066.600	EX	300 D 4matic 3Volumi	OM 603.963	6010501124	9.0	14.03	37.5	F-1	G
8066.600	EX	300 T D Combi SW	OM 603.912	6010500924	9.0	14.03	37.5	F-1	G
8066.600	EX	300 T D Combi SW	OM 603.912	6010501124	9.0	14.03	37.5	F-1	G
8066.600	EX	300 T D Combi SW	OM 603.960	6010500924	9.0	14.03	37.5	F-1	G
8066.600	EX	300 T D Combi SW	OM 603.960	6010501124	9.0	14.03	37.5	F-1	G
8066.600	EX	300 T Turbo D 4matic Combi SW	OM 603.963	6010500924	9.0	14.03	37.5	F-1	G
8066.600	EX	300 T Turbo D 4matic Combi SW	OM 603.963	6010501124	9.0	14.03	37.5	F-1	G
8066.600	EX	300 T Turbo D Combi SW	OM 603.960	6010500924	9.0	14.03	37.5	F-1	G
8066.600	EX	300 T Turbo D Combi SW	OM 603.960	6010501124	9.0	14.03	37.5	F-1	G
8066.600	EX	300 T Turbo D Combi SW	OM 603.963	6010500924	9.0	14.03	37.5	F-1	G
8066.600	EX	300 T Turbo D Combi SW	OM 603.963	6010501124	9.0	14.03	37.5	F-1	G
8066.600	EX	300 Turbo D 3Volumi	OM 603.960	6010500924	9.0	14.03	37.5	F-1	G
8066.600	EX	300 Turbo D 3Volumi	OM 603.960	6010501124	9.0	14.03	37.5	F-1	G
8066.600	EX	300 Turbo D 3Volumi	OM 603.963	6010500924	9.0	14.03	37.5	F-1	G
8066.600	EX	300 Turbo D 3Volumi	OM 603.963	6010501124	9.0	14.03	37.5	F-1	G
8100.100	EX	364.901/ 950 / 952 / 954 / 981	OM364 A	3520533730	10.0	15.03	67.0	A-1	G
8100.100	EX	364.901/ 950 / 952 / 954 / 981	OM364 A	3660530230	10.0	15.03	67.0	A-1	G
8100.100	EX	366.951->962 / 965->974	OM366 A D	3520533730	10.0	15.03	67.0	A-1	G
8100.100	EX	366.951->962 / 965->974	OM366 A D	3660530230	10.0	15.03	67.0	A-1	G
8075.600	IN-EX	401.900 / 901 / 905->909 / 912	OM401	4030530030	12.0	18.04	67.0	F	G1
8075.600	IN-EX	401.900 / 901 / 905->909 / 912	OM401	4220530430	12.0	18.04	67.0	F	G1
8075.600	IN-EX	401.901 / 970 / 972->974	OM401 A D	4030530030	12.0	18.04	67.0	F	G1
8075.600	IN-EX	401.901 / 970 / 972->974	OM401 A D	4220530430	12.0	18.04	67.0	F	G1
8075.600	IN-EX	401.901 / 970 / 972->974	OM401 LA D	4030530030	12.0	18.04	67.0	F	G1
8075.600	IN-EX	401.901 / 970 / 972->974	OM401 LA D	4220530430	12.0	18.04	67.0	F	G1
8075.600	IN-EX	401.916 / 918->919 / 921->928	OM401	4030530030	12.0	18.04	67.0	F	G1
8075.600	IN-EX	401.916 / 918->919 / 921->928	OM401	4220530430	12.0	18.04	67.0	F	G1
8075.600	IN-EX	401.974 / 977->981	OM401 A-LA D	4030530030	12.0	18.04	67.0	F	G1
8075.600	IN-EX	401.974 / 977->981	OM401 A-LA D	4220530430	12.0	18.04	67.0	F	G1
8075.600	IN-EX	402.900->901 / 910 / 905->907	OM402	4030530030	12.0	18.04	67.0	F	G1
8075.600	IN-EX	402.900->901 / 910 / 905->907	OM402	4220530430	12.0	18.04	67.0	F	G1
8075.600	IN-EX	402.901 / 970 / 972->973	OM402 A-LA D	4030530030	12.0	18.04	67.0	F	G1
8075.600	IN-EX	402.901 / 970 / 972->973	OM402 A-LA D	4220530430	12.0	18.04	67.0	F	G1
8075.600	IN-EX	402.914 / 916 / 917 / 919	OM402	4030530030	12.0	18.04	67.0	F	G1
8075.600	IN-EX	402.914 / 916 / 917 / 919	OM402	4220530430	12.0	18.04	67.0	F	G1
8075.600	IN-EX	402.921 / 923->928	OM402	4030530030	12.0	18.04	67.0	F	G1
8075.600	IN-EX	402.921 / 923->928	OM402	4220530430	12.0	18.04	67.0	F	G1
8075.600	IN-EX	403.900 / 905->906 / 910 / 911	OM403	4030530030	12.0	18.04	67.0	F	G1
8075.600	IN-EX	403.900 / 905->906 / 910 / 911	OM403	4220530430	12.0	18.04	67.0	F	G1
8075.600	IN-EX	403.915->917 / 919 / 930->935	OM403	4030530030	12.0	18.04	67.0	F	G1
8075.600	IN-EX	403.915->917 / 919 / 930->935	OM403	4220530430	12.0	18.04	67.0	F	G1
8075.600	IN-EX	404.900->901	OM404	4030530030	12.0	18.04	67.0	F	G1
8075.600	IN-EX	404.900->901	OM404	4220530430	12.0	18.04	67.0	F	G1
8075.600	IN-EX	404.901	OM404 A D	4030530030	12.0	18.04	67.0	F	G1
8075.600	IN-EX	404.901	OM404 A D	4220530430	12.0	18.04	67.0	F	G1
8075.600	IN-EX	407.900->901	OM407	4030530030	12.0	18.04	67.0	F	G1
8075.600	IN-EX	407.900->901	OM407	4220530430	12.0	18.04	67.0	F	G1
8075.600	IN-EX	407.901	OM407 A-LA-HA D	4030530030	12.0	18.04	67.0	F	G1
8075.600	IN-EX	407.901	OM407 A-LA-HA D	4220530430	12.0	18.04	67.0	F	G1
8075.600	IN-EX	407.901 / 905 / 907->911	OM407 H	4030530030	12.0	18.04	67.0	F	G1

(D1) Internal diameter, (D2) External diameter, (B) Shape, (C) Material

VALVE GUIDES

MERCEDES BENZ

IVT Ref.	Type	Model	Engine	OEM Ref.	D1	D2	Length	B	C
8075.600	IN-EX	407.901 / 905 / 907->911	OM407 H	4220530430	12.0	18.04	67.0	F	G1
8075.600	IN-EX	407.913->920	OM407 H	4030530030	12.0	18.04	67.0	F	G1
8075.600	IN-EX	407.913->920	OM407 H	4220530430	12.0	18.04	67.0	F	G1
8075.600	IN-EX	407.951 / 955	OM407 AH D	4030530030	12.0	18.04	67.0	F	G1
8075.600	IN-EX	407.951 / 955	OM407 AH D	4220530430	12.0	18.04	67.0	F	G1
8075.600	IN-EX	421.900 / 905->908 / 910	OM421	4030530030	12.0	18.04	67.0	F	G1
8075.600	IN-EX	421.900 / 905->908 / 910	OM421	4220530430	12.0	18.04	67.0	F	G1
8075.600	IN-EX	421.901 / 951	OM421 A-LA	4030530030	12.0	18.04	67.0	F	G1
8075.600	IN-EX	421.901 / 951	OM421 A-LA	4220530430	12.0	18.04	67.0	F	G1
8075.600	IN-EX	422.900 / 905->909 / 914->915	OM422	4030530030	12.0	18.04	67.0	F	G1
8075.600	IN-EX	422.900 / 905->909 / 914->915	OM422	4220530430	12.0	18.04	67.0	F	G1
8075.600	IN-EX	422.901 / 951->952 / 954 / 956	OM422 A D	4030530030	12.0	18.04	67.0	F	G1
8075.600	IN-EX	422.901 / 951->952 / 954 / 956	OM422 A D	4220530430	12.0	18.04	67.0	F	G1
8075.600	IN-EX	422.901 / 953 / 955 / 959	OM422 LA D	4030530030	12.0	18.04	67.0	F	G1
8075.600	IN-EX	422.901 / 953 / 955 / 959	OM422 LA D	4220530430	12.0	18.04	67.0	F	G1
8075.600	IN-EX	422.901 / 976	OM422 A-LA D	4030530030	12.0	18.04	67.0	F	G1
8075.600	IN-EX	422.901 / 976	OM422 A-LA D	4220530430	12.0	18.04	67.0	F	G1
8075.600	IN-EX	422.917->924	OM422	4030530030	12.0	18.04	67.0	F	G1
8075.600	IN-EX	422.917->924	OM422	4220530430	12.0	18.04	67.0	F	G1
8075.600	IN-EX	422.958 / 963	OM422 A D	4030530030	12.0	18.04	67.0	F	G1
8075.600	IN-EX	422.958 / 963	OM422 A D	4220530430	12.0	18.04	67.0	F	G1
8075.600	IN-EX	423.900 / 905->909	OM423	4030530030	12.0	18.04	67.0	F	G1
8075.600	IN-EX	423.900 / 905->909	OM423	4220530430	12.0	18.04	67.0	F	G1
8075.600	IN-EX	423.901 / 950	OM423 A-LA	4030530030	12.0	18.04	67.0	F	G1
8075.600	IN-EX	423.901 / 950	OM423 A-LA	4220530430	12.0	18.04	67.0	F	G1
8075.600	IN-EX	424.900	OM424	4030530030	12.0	18.04	67.0	F	G1
8075.600	IN-EX	424.900	OM424	4220530430	12.0	18.04	67.0	F	G1
8075.600	IN-EX	424.901	OM424 A-LA D	4030530030	12.0	18.04	67.0	F	G1
8075.600	IN-EX	424.901	OM424 A-LA D	4220530430	12.0	18.04	67.0	F	G1
8075.600	IN-EX	427.900	OM427	4030530030	12.0	18.04	67.0	F	G1
8075.600	IN-EX	427.900	OM427	4220530430	12.0	18.04	67.0	F	G1
8075.600	IN-EX	427.901 / 905 / 910->911	OM427 H	4030530030	12.0	18.04	67.0	F	G1
8075.600	IN-EX	427.901 / 905 / 910->911	OM427 H	4220530430	12.0	18.04	67.0	F	G1
8075.600	IN-EX	427.902	OM427 A-LA D	4030530030	12.0	18.04	67.0	F	G1
8075.600	IN-EX	427.902	OM427 A-LA D	4220530430	12.0	18.04	67.0	F	G1
8075.600	IN-EX	427.903 / 950->952	OM427 HA D	4030530030	12.0	18.04	67.0	F	G1
8075.600	IN-EX	427.903 / 950->952	OM427 HA D	4220530430	12.0	18.04	67.0	F	G1
8075.600	IN-EX	441.900 / 905->909 / 911->927	OM441	4030530030	12.0	18.04	67.0	F	G1
8075.600	IN-EX	441.900 / 905->909 / 911->927	OM441	4220530430	12.0	18.04	67.0	F	G1
8075.600	IN-EX	441.901 / 950 / 951 / 953	OM441 A-LA D	4030530030	12.0	18.04	67.0	F	G1
8075.600	IN-EX	441.901 / 950 / 951 / 953	OM441 A-LA D	4220530430	12.0	18.04	67.0	F	G1
8075.600	IN-EX	441.901 / 970 / 972->974	OM441 A-LA D	4030530030	12.0	18.04	67.0	F	G1
8075.600	IN-EX	441.901 / 970 / 972->974	OM441 A-LA D	4220530430	12.0	18.04	67.0	F	G1
8075.600	IN-EX	441.960 / 983 / 985 / 986	OM441 A-LA D	4030530030	12.0	18.04	67.0	F	G1
8075.600	IN-EX	441.960 / 983 / 985 / 986	OM441 A-LA D	4220530430	12.0	18.04	67.0	F	G1
8075.600	IN-EX	441.986	OM441 A-LA-HA D	4030530030	12.0	18.04	67.0	F	G1
8075.600	IN-EX	441.986	OM441 A-LA-HA D	4220530430	12.0	18.04	67.0	F	G1
8075.600	IN-EX	441.987 / 989 / 992	OM441 A-LA D	4030530030	12.0	18.04	67.0	F	G1
8075.600	IN-EX	441.987 / 989 / 992	OM441 A-LA D	4220530430	12.0	18.04	67.0	F	G1
8075.600	IN-EX	442.900 / 905->909	OM442	4030530030	12.0	18.04	67.0	F	G1
8075.600	IN-EX	442.900 / 905->909	OM442	4030530030	12.0	18.04	67.0	F	G1
8075.600	IN-EX	442.900 / 905->909	OM442	4220530430	12.0	18.04	67.0	F	G1
8075.600	IN-EX	442.900 / 905->909	OM442	4220530430	12.0	18.04	67.0	F	G1
8075.600	IN-EX	442.900 / 905->911 / 914	OM442	4030530030	12.0	18.04	67.0	F	G1
8075.600	IN-EX	442.900 / 905->911 / 914	OM442	4220530430	12.0	18.04	67.0	F	G1
8075.600	IN-EX	442.901 / 940 / 950 / 952	OM442 A D	4030530030	12.0	18.04	67.0	F	G1
8075.600	IN-EX	442.901 / 940 / 950 / 952	OM442 A D	4220530430	12.0	18.04	67.0	F	G1
8075.600	IN-EX	442.901 / 941->946 / 950->959	OM442 A-LA D	4030530030	12.0	18.04	67.0	F	G1
8075.600	IN-EX	442.901 / 941->946 / 950->959	OM442 A-LA D	4220530430	12.0	18.04	67.0	F	G1
8075.600	IN-EX	442.901 / 951 / 953 / 980	OM442 LA D	4030530030	12.0	18.04	67.0	F	G1
8075.600	IN-EX	442.901 / 951 / 953 / 980	OM442 LA D	4220530430	12.0	18.04	67.0	F	G1
8075.600	IN-EX	442.918->935	OM442	4030530030	12.0	18.04	67.0	F	G1

(D1) Internal diameter, (D2) External diameter, (B) Shape, (C) Material

VALVE GUIDES

MERCEDES BENZ

IVT Ref.	Type	Model	Engine	OEM Ref.	D1	D2	Length	B	C
8075.600	IN-EX	442.918->935	OM442	4220530430	12.0	18.04	67.0	F	G1
8075.600	IN-EX	442.958	OM442 A D	4030530030	12.0	18.04	67.0	F	G1
8075.600	IN-EX	442.958	OM442 A D	4220530430	12.0	18.04	67.0	F	G1
8075.600	IN-EX	442.960->968 / 976 / 978 / 980	OM442 A-LA D	4030530030	12.0	18.04	67.0	F	G1
8075.600	IN-EX	442.960->968 / 976 / 978 / 980	OM442 A-LA D	4220530430	12.0	18.04	67.0	F	G1
8075.600	IN-EX	442.982->983 / 985 / 989	OM442 A-LA D	4030530030	12.0	18.04	67.0	F	G1
8075.600	IN-EX	442.982->983 / 985 / 989	OM442 A-LA D	4220530430	12.0	18.04	67.0	F	G1
8075.600	IN-EX	442.992->994 / 997	OM442 A-LA D	4030530030	12.0	18.04	67.0	F	G1
8075.600	IN-EX	442.992->994 / 997	OM442 A-LA D	4220530430	12.0	18.04	67.0	F	G1
8075.600	IN-EX	444.901	OM444 A-LA D	4030530030	12.0	18.04	67.0	F	G1
8075.600	IN-EX	444.901	OM444 A-LA D	4220530430	12.0	18.04	67.0	F	G1
8075.600	IN-EX	447.900	OM447	4030530030	12.0	18.04	67.0	F	G1
8075.600	IN-EX	447.900	OM447	4220530430	12.0	18.04	67.0	F	G1
8075.600	IN-EX	447.901 / 905->908	OM447 H	4030530030	12.0	18.04	67.0	F	G1
8075.600	IN-EX	447.901 / 905->908	OM447 H	4220530430	12.0	18.04	67.0	F	G1
8075.600	IN-EX	447.902	OM447 A-LA D	4030530030	12.0	18.04	67.0	F	G1
8075.600	IN-EX	447.902	OM447 A-LA D	4220530430	12.0	18.04	67.0	F	G1
8075.600	IN-EX	447.903 / 950->952	OM447 HA D	4030530030	12.0	18.04	67.0	F	G1
8075.600	IN-EX	447.903 / 950->952	OM447 HA D	4220530430	12.0	18.04	67.0	F	G1
8075.600	IN-EX	447.903 / 950->953 / 956->959	OM447 A-LA-HA D	4030530030	12.0	18.04	67.0	F	G1
8075.600	IN-EX	447.903 / 950->953 / 956->959	OM447 A-LA-HA D	4220530430	12.0	18.04	67.0	F	G1
8075.600	IN-EX	447.981->982 / 984 / 986	OM447 A-LA-HA D	4030530030	12.0	18.04	67.0	F	G1
8075.600	IN-EX	447.981->982 / 984 / 986	OM447 A-LA-HA D	4220530430	12.0	18.04	67.0	F	G1
8081.602	EX	510	M102 - 102.946	1020501824	9.0	14.04	51.0	F-1	Cu
8012.600	IN-EX	Actros 1831 AK	OM 541.926	5410531230	9.0	15.03	61.0	F	G1
8012.600	IN-EX	Actros 1831 AK	OM 541.941	5410531230	9.0	15.03	61.0	F	G1
8192.600	IN-EX	ACTROS 1831 AK - Cassone ribal	-	5410532730	9.0	15.03	61.0	F	G1
8012.600	IN-EX	Actros 1831 K	OM 541.920	5410531230	9.0	15.03	61.0	F	G1
8012.600	IN-EX	Actros 1831 K	OM 541.940	5410531230	9.0	15.03	61.0	F	G1
8192.600	IN-EX	ACTROS 1831 K - Cassone ribalt	-	5410532730	9.0	15.03	61.0	F	G1
8192.600	IN-EX	ACTROS 1831 S, 1831 LS - Tratto	-	5410532730	9.0	15.03	61.0	F	G1
8012.600	IN-EX	Actros 1831 S,LS	OM 541.920	5410531230	9.0	15.03	61.0	F	G1
8012.600	IN-EX	Actros 1831 S,LS	OM 541.940	5410531230	9.0	15.03	61.0	F	G1
8192.600	IN-EX	ACTROS 1831, 1831 L - Pianale p	-	5410532730	9.0	15.03	61.0	F	G1
8012.600	IN-EX	Actros 1831,1831 L	OM 541.920	5410531230	9.0	15.03	61.0	F	G1
8012.600	IN-EX	Actros 1835 AK	OM 541.927	5410531230	9.0	15.03	61.0	F	G1
8012.600	IN-EX	Actros 1835 AK	OM 541.943	5410531230	9.0	15.03	61.0	F	G1
8192.600	IN-EX	ACTROS 1835 AK - Cassone ribal	-	5410532730	9.0	15.03	61.0	F	G1
8012.600	IN-EX	Actros 1835 K	OM 541.922	5410531230	9.0	15.03	61.0	F	G1
8192.600	IN-EX	ACTROS 1835 K - Cassone ribalt	-	5410532730	9.0	15.03	61.0	F	G1
8192.600	IN-EX	ACTROS 1835 S, 1835 LS - Tratto	-	5410532730	9.0	15.03	61.0	F	G1
8012.600	IN-EX	Actros 1835 S, LS	OM 541.922	5410531230	9.0	15.03	61.0	F	G1
8012.600	IN-EX	Actros 1835, 1835 L	OM 541.922	5410531230	9.0	15.03	61.0	F	G1
8192.600	IN-EX	ACTROS 1835, 1835 L - Pianale p	-	5410532730	9.0	15.03	61.0	F	G1
8012.600	IN-EX	Actros 1840 AK	OM 541.924	5410531230	9.0	15.03	61.0	F	G1
8012.600	IN-EX	Actros 1840 AK	OM 541.945	5410531230	9.0	15.03	61.0	F	G1
8192.600	IN-EX	ACTROS 1840 AK - Cassone ribal	-	5410532730	9.0	15.03	61.0	F	G1
8012.600	IN-EX	Actros 1840 K	OM 541.923	5410531230	9.0	15.03	61.0	F	G1
8192.600	IN-EX	ACTROS 1840 K - Cassone ribalt	-	5410532730	9.0	15.03	61.0	F	G1
8192.600	IN-EX	ACTROS 1840 S, 1840 LS - Tratto	-	5410532730	9.0	15.03	61.0	F	G1
8012.600	IN-EX	Actros 1840 S,LS	OM 541.923	5410531230	9.0	15.03	61.0	F	G1
8012.600	IN-EX	Actros 1840, 1840 L	OM 541.923	5410531230	9.0	15.03	61.0	F	G1
8192.600	IN-EX	ACTROS 1840, 1840 L - Pianale p	-	5410532730	9.0	15.03	61.0	F	G1
8012.600	IN-EX	Actros 1843 AK	OM 541.921	5410531230	9.0	15.03	61.0	F	G1
8012.600	IN-EX	Actros 1843 AK	OM 541.947	5410531230	9.0	15.03	61.0	F	G1
8192.600	IN-EX	ACTROS 1843 AK - Cassone ribal	-	5410532730	9.0	15.03	61.0	F	G1
8012.600	IN-EX	Actros 1843 K	OM 541.925	5410531230	9.0	15.03	61.0	F	G1
8012.600	IN-EX	Actros 1843 K	OM 541.946	5410531230	9.0	15.03	61.0	F	G1
8192.600	IN-EX	ACTROS 1843 K - Cassone ribalt	-	5410532730	9.0	15.03	61.0	F	G1
8192.600	IN-EX	ACTROS 1843 S, 1843 LS - Tratto	-	5410532730	9.0	15.03	61.0	F	G1
8012.600	IN-EX	Actros 1843 S,LS	OM 541.925	5410531230	9.0	15.03	61.0	F	G1
8012.600	IN-EX	Actros 1843 S,LS	OM 541.946	5410531230	9.0	15.03	61.0	F	G1

(D1) Internal diameter, (D2) External diameter, (B) Shape, (C) Material

VALVE GUIDES

MERCEDES BENZ

IVT Ref.	Type	Model	Engine	OEM Ref.	D1	D2	Length	B	C
8012.600	IN-EX	Actros 1843, 1843 L	OM 541.925	5410531230	9.0	15.03	61.0	F	G1
8192.600	IN-EX	ACTROS 1843, 1843 L - Pianale p	-	5410532730	9.0	15.03	61.0	F	G1
8192.600	IN-EX	ACTROS 1846 AK - Cassone ribal	-	5410532730	9.0	15.03	61.0	F	G1
8192.600	IN-EX	ACTROS 1846 S, 1846 LS - Tratto	-	5410532730	9.0	15.03	61.0	F	G1
8012.600	IN-EX	Actros 1848 AK	OM 542.925	5410531230	9.0	15.03	61.0	F	G1
8192.600	IN-EX	ACTROS 1848 AK - Cassone ribal	-	5410532730	9.0	15.03	61.0	F	G1
8012.600	IN-EX	Actros 1848 K	OM 542.921	5410531230	9.0	15.03	61.0	F	G1
8012.600	IN-EX	Actros 1848 K	OM 542.940	5410531230	9.0	15.03	61.0	F	G1
8192.600	IN-EX	ACTROS 1848 K - Cassone ribalt	-	5410532730	9.0	15.03	61.0	F	G1
8192.600	IN-EX	ACTROS 1848 S, 1848 LS - Tratto	-	5410532730	9.0	15.03	61.0	F	G1
8012.600	IN-EX	Actros 1848 S,LS	OM 542.921	5410531230	9.0	15.03	61.0	F	G1
8012.600	IN-EX	Actros 1848 S,LS	OM 542.940	5410531230	9.0	15.03	61.0	F	G1
8012.600	IN-EX	Actros 1848, 1848 L	OM 542.921	5410531230	9.0	15.03	61.0	F	G1
8192.600	IN-EX	ACTROS 1848, 1848 L - Pianale p	-	5410532730	9.0	15.03	61.0	F	G1
8192.600	IN-EX	ACTROS 1850 AK - Cassone ribal	-	5410532730	9.0	15.03	61.0	F	G1
8192.600	IN-EX	ACTROS 1853 S, 1853 LS - Tratto	-	5410532730	9.0	15.03	61.0	F	G1
8012.600	IN-EX	Actros 1853 S,LS	OM 542.920	5410531230	9.0	15.03	61.0	F	G1
8012.600	IN-EX	Actros 1853 S,LS	OM 542.942	5410531230	9.0	15.03	61.0	F	G1
8012.600	IN-EX	Actros 1853, 1853 L	OM 542.920	5410531230	9.0	15.03	61.0	F	G1
8192.600	IN-EX	ACTROS 1853, 1853 L - Pianale p	-	5410532730	9.0	15.03	61.0	F	G1
8012.600	IN-EX	Actros 1857 L	OM 542.922	5410531230	9.0	15.03	61.0	F	G1
8192.600	IN-EX	ACTROS 1857 L - Pianale piatto /	-	5410532730	9.0	15.03	61.0	F	G1
8012.600	IN-EX	Actros 1857 LS	OM 542.922	5410531230	9.0	15.03	61.0	F	G1
8012.600	IN-EX	Actros 1857 LS	OM 542.944	5410531230	9.0	15.03	61.0	F	G1
8192.600	IN-EX	ACTROS 1857 LS - Trattore per s	-	5410532730	9.0	15.03	61.0	F	G1
8012.600	IN-EX	Actros 2031	OM 541.920	5410531230	9.0	15.03	61.0	F	G1
8192.600	IN-EX	ACTROS 2031 - Pianale piatto / T	-	5410532730	9.0	15.03	61.0	F	G1
8012.600	IN-EX	Actros 2031 A	OM 541.926	5410531230	9.0	15.03	61.0	F	G1
8192.600	IN-EX	ACTROS 2031 A - Pianale piatto /	-	5410532730	9.0	15.03	61.0	F	G1
8012.600	IN-EX	Actros 2031 AK	OM 541.926	5410531230	9.0	15.03	61.0	F	G1
8012.600	IN-EX	Actros 2031 AK	OM 541.941	5410531230	9.0	15.03	61.0	F	G1
8192.600	IN-EX	ACTROS 2031 AK - Cassone ribal	-	5410532730	9.0	15.03	61.0	F	G1
8012.600	IN-EX	Actros 2031 AS	OM 541.926	5410531230	9.0	15.03	61.0	F	G1
8012.600	IN-EX	Actros 2031 AS	OM 541.941	5410531230	9.0	15.03	61.0	F	G1
8192.600	IN-EX	ACTROS 2031 AS - Trattore per s	-	5410532730	9.0	15.03	61.0	F	G1
8012.600	IN-EX	Actros 2031 K	OM 541.920	5410531230	9.0	15.03	61.0	F	G1
8012.600	IN-EX	Actros 2031 K	OM 541.940	5410531230	9.0	15.03	61.0	F	G1
8192.600	IN-EX	ACTROS 2031 K - Cassone ribalt	-	5410532730	9.0	15.03	61.0	F	G1
8012.600	IN-EX	Actros 2031 S	OM 541.920	5410531230	9.0	15.03	61.0	F	G1
8012.600	IN-EX	Actros 2031 S	OM 541.940	5410531230	9.0	15.03	61.0	F	G1
8192.600	IN-EX	ACTROS 2031 S - Trattore per se	-	5410532730	9.0	15.03	61.0	F	G1
8012.600	IN-EX	Actros 2035 A	OM 541.927	5410531230	9.0	15.03	61.0	F	G1
8012.600	IN-EX	Actros 2035 A	OM 541.943	5410531230	9.0	15.03	61.0	F	G1
8192.600	IN-EX	ACTROS 2035 A - Pianale piatto /	-	5410532730	9.0	15.03	61.0	F	G1
8012.600	IN-EX	Actros 2035 S	OM 541.922	5410531230	9.0	15.03	61.0	F	G1
8192.600	IN-EX	ACTROS 2035 S - Trattore per se	-	5410532730	9.0	15.03	61.0	F	G1
8012.600	IN-EX	Actros 2040	OM 541.923	5410531230	9.0	15.03	61.0	F	G1
8192.600	IN-EX	ACTROS 2040 - Pianale piatto / T	-	5410532730	9.0	15.03	61.0	F	G1
8012.600	IN-EX	Actros 2040 AK	OM 541.924	5410531230	9.0	15.03	61.0	F	G1
8012.600	IN-EX	Actros 2040 AK	OM 541.925	5410531230	9.0	15.03	61.0	F	G1
8192.600	IN-EX	ACTROS 2040 AK - Cassone ribal	-	5410532730	9.0	15.03	61.0	F	G1
8012.600	IN-EX	Actros 2040 AS	OM 541.924	5410531230	9.0	15.03	61.0	F	G1
8012.600	IN-EX	Actros 2040 AS	OM 541.925	5410531230	9.0	15.03	61.0	F	G1
8192.600	IN-EX	ACTROS 2040 AS - Trattore per s	-	5410532730	9.0	15.03	61.0	F	G1
8012.600	IN-EX	Actros 2040 S	OM 541.923	5410531230	9.0	15.03	61.0	F	G1
8192.600	IN-EX	ACTROS 2040 S - Trattore per se	-	5410532730	9.0	15.03	61.0	F	G1
8012.600	IN-EX	Actros 2043 AS	OM 541.921	5410531230	9.0	15.03	61.0	F	G1
8012.600	IN-EX	Actros 2043 AS	OM 541.925	5410531230	9.0	15.03	61.0	F	G1
8012.600	IN-EX	Actros 2043 AS	OM 541.947	5410531230	9.0	15.03	61.0	F	G1
8192.600	IN-EX	ACTROS 2043 AS - Trattore per s	-	5410532730	9.0	15.03	61.0	F	G1
8192.600	IN-EX	ACTROS 2046 AS - Trattore per s	-	5410532730	9.0	15.03	61.0	F	G1
8012.600	IN-EX	Actros 2048 AS	OM 541.925	5410531230	9.0	15.03	61.0	F	G1

(D1) Internal diameter, (D2) External diameter, (B) Shape, (C) Material

VALVE GUIDES

MERCEDES BENZ

IVT Ref.	Type	Model	Engine	OEM Ref.	D1	D2	Length	B	C
8192.600	IN-EX	ACTROS 2048 AS - Trattore per s	-	5410532730	9.0	15.03	61.0	F	G1
8192.600	IN-EX	ACTROS 2050 AS - Trattore per s	-	5410532730	9.0	15.03	61.0	F	G1
8012.600	IN-EX	Actros 2053 S	OM 542.920	5410531230	9.0	15.03	61.0	F	G1
8012.600	IN-EX	Actros 2053 S	OM 542.942	5410531230	9.0	15.03	61.0	F	G1
8192.600	IN-EX	ACTROS 2053 S - Trattore per se	-	5410532730	9.0	15.03	61.0	F	G1
8012.600	IN-EX	Actros 2531 LS	OM 541.920	5410531230	9.0	15.03	61.0	F	G1
8012.600	IN-EX	Actros 2531 LS	OM 541.940	5410531230	9.0	15.03	61.0	F	G1
8192.600	IN-EX	ACTROS 2531 LS - Trattore per s	-	5410532730	9.0	15.03	61.0	F	G1
8012.600	IN-EX	Actros 2531, 2531 L	OM 541.920	5410531230	9.0	15.03	61.0	F	G1
8012.600	IN-EX	Actros 2531, 2531 L	OM 541.940	5410531230	9.0	15.03	61.0	F	G1
8192.600	IN-EX	ACTROS 2531, 2531 L - Pianale p	-	5410532730	9.0	15.03	61.0	F	G1
8012.600	IN-EX	Actros 2535 L	OM 541.922	5410531230	9.0	15.03	61.0	F	G1
8192.600	IN-EX	ACTROS 2535 L - Pianale piatto /	-	5410532730	9.0	15.03	61.0	F	G1
8012.600	IN-EX	Actros 2535 LS	OM 541.922	5410531230	9.0	15.03	61.0	F	G1
8192.600	IN-EX	ACTROS 2535 LS - Trattore per s	-	5410532730	9.0	15.03	61.0	F	G1
8012.600	IN-EX	Actros 2540 LS	OM 541.923	5410531230	9.0	15.03	61.0	F	G1
8192.600	IN-EX	ACTROS 2540 LS - Trattore per s	-	5410532730	9.0	15.03	61.0	F	G1
8012.600	IN-EX	Actros 2540, 2540 L	OM 541.923	5410531230	9.0	15.03	61.0	F	G1
8192.600	IN-EX	ACTROS 2540, 2540 L - Pianale p	-	5410532730	9.0	15.03	61.0	F	G1
8012.600	IN-EX	Actros 2543 LS	OM 541.925	5410531230	9.0	15.03	61.0	F	G1
8012.600	IN-EX	Actros 2543 LS	OM 541.946	5410531230	9.0	15.03	61.0	F	G1
8192.600	IN-EX	ACTROS 2543 LS - Trattore per s	-	5410532730	9.0	15.03	61.0	F	G1
8012.600	IN-EX	Actros 2543, 2543 L	OM 541.925	5410531230	9.0	15.03	61.0	F	G1
8012.600	IN-EX	Actros 2543, 2543 L	OM 541.946	5410531230	9.0	15.03	61.0	F	G1
8192.600	IN-EX	ACTROS 2543, 2543 L - Pianale p	-	5410532730	9.0	15.03	61.0	F	G1
8192.600	IN-EX	ACTROS 2546 LS - Trattore per s	-	5410532730	9.0	15.03	61.0	F	G1
8012.600	IN-EX	Actros 2548 LS	OM 542.921	5410531230	9.0	15.03	61.0	F	G1
8012.600	IN-EX	Actros 2548 LS	OM 542.940	5410531230	9.0	15.03	61.0	F	G1
8192.600	IN-EX	ACTROS 2548 LS - Trattore per s	-	5410532730	9.0	15.03	61.0	F	G1
8012.600	IN-EX	Actros 2548, 2548 L	OM 542.921	5410531230	9.0	15.03	61.0	F	G1
8192.600	IN-EX	ACTROS 2548, 2548 L - Pianale p	-	5410532730	9.0	15.03	61.0	F	G1
8012.600	IN-EX	Actros 2553 LS	OM 542.920	5410531230	9.0	15.03	61.0	F	G1
8012.600	IN-EX	Actros 2553 LS	OM 542.942	5410531230	9.0	15.03	61.0	F	G1
8192.600	IN-EX	ACTROS 2553 LS - Trattore per s	-	5410532730	9.0	15.03	61.0	F	G1
8012.600	IN-EX	Actros 2553, 2553 L	OM 542.920	5410531230	9.0	15.03	61.0	F	G1
8192.600	IN-EX	ACTROS 2553, 2553 L - Pianale p	-	5410532730	9.0	15.03	61.0	F	G1
8012.600	IN-EX	Actros 2557 L	OM 542.922	5410531230	9.0	15.03	61.0	F	G1
8192.600	IN-EX	ACTROS 2557 L - Pianale piatto /	-	5410532730	9.0	15.03	61.0	F	G1
8012.600	IN-EX	Actros 2631 B	OM 541.920	5410531230	9.0	15.03	61.0	F	G1
8012.600	IN-EX	Actros 2631 B	OM 541.940	5410531230	9.0	15.03	61.0	F	G1
8192.600	IN-EX	ACTROS 2631 B - Betoniera	-	5410532730	9.0	15.03	61.0	F	G1
8012.600	IN-EX	Actros 2631 K	OM 541.920	5410531230	9.0	15.03	61.0	F	G1
8012.600	IN-EX	Actros 2631 K	OM 541.940	5410531230	9.0	15.03	61.0	F	G1
8192.600	IN-EX	ACTROS 2631 K - Cassone ribalt	-	5410532730	9.0	15.03	61.0	F	G1
8012.600	IN-EX	Actros 2631, 2631 L	OM 541.920	5410531230	9.0	15.03	61.0	F	G1
8192.600	IN-EX	ACTROS 2631, 2631 L - Pianale p	-	5410532730	9.0	15.03	61.0	F	G1
8012.600	IN-EX	Actros 2635 B	OM 541.922	5410531230	9.0	15.03	61.0	F	G1
8192.600	IN-EX	ACTROS 2635 B - Betoniera	-	5410532730	9.0	15.03	61.0	F	G1
8192.600	IN-EX	ACTROS 2635 K, 2635 LK - Cass	-	5410532730	9.0	15.03	61.0	F	G1
8012.600	IN-EX	Actros 2635 K,LK	OM 541.922	5410531230	9.0	15.03	61.0	F	G1
8012.600	IN-EX	Actros 2635, 2635 L	OM 541.922	5410531230	9.0	15.03	61.0	F	G1
8192.600	IN-EX	ACTROS 2635, 2635 L - Pianale p	-	5410532730	9.0	15.03	61.0	F	G1
8012.600	IN-EX	Actros 2640 B	OM 541.923	5410531230	9.0	15.03	61.0	F	G1
8192.600	IN-EX	ACTROS 2640 B - Betoniera	-	5410532730	9.0	15.03	61.0	F	G1
8192.600	IN-EX	ACTROS 2640 K, 2640 LK - Cass	-	5410532730	9.0	15.03	61.0	F	G1
8012.600	IN-EX	Actros 2640 K,LK	OM 541.923	5410531230	9.0	15.03	61.0	F	G1
8192.600	IN-EX	ACTROS 2640 S, 2640 LS - Tratto	-	5410532730	9.0	15.03	61.0	F	G1
8012.600	IN-EX	Actros 2640 S,LS	OM 541.923	5410531230	9.0	15.03	61.0	F	G1
8012.600	IN-EX	Actros 2640, 2640 L	OM 541.923	5410531230	9.0	15.03	61.0	F	G1
8192.600	IN-EX	ACTROS 2640, 2640 L - Pianale p	-	5410532730	9.0	15.03	61.0	F	G1
8012.600	IN-EX	Actros 2643 B	OM 541.925	5410531230	9.0	15.03	61.0	F	G1
8012.600	IN-EX	Actros 2643 B	OM 541.946	5410531230	9.0	15.03	61.0	F	G1

(D1) Internal diameter, (D2) External diameter, (B) Shape, (C) Material

VALVE GUIDES

MERCEDES BENZ

IVT Ref.	Type	Model	Engine	OEM Ref.	D1	D2	Length	B	C
8192.600	IN-EX	ACTROS 2643 B - Betoniera	-	5410532730	9.0	15.03	61.0	F	G1
8192.600	IN-EX	ACTROS 2643 K, 2643 LK - Cass	-	5410532730	9.0	15.03	61.0	F	G1
8012.600	IN-EX	Actros 2643 K,LK	OM 541.925	5410531230	9.0	15.03	61.0	F	G1
8012.600	IN-EX	Actros 2643 K,LK	OM 541.946	5410531230	9.0	15.03	61.0	F	G1
8192.600	IN-EX	ACTROS 2643 S, 2643 LS - Tratto	-	5410532730	9.0	15.03	61.0	F	G1
8012.600	IN-EX	Actros 2643 S,LS	OM 541.925	5410531230	9.0	15.03	61.0	F	G1
8012.600	IN-EX	Actros 2643 S,LS	OM 541.946	5410531230	9.0	15.03	61.0	F	G1
8012.600	IN-EX	Actros 2643, 2643 L	OM 541.925	5410531230	9.0	15.03	61.0	F	G1
8192.600	IN-EX	ACTROS 2643, 2643 L - Pianale p	-	5410532730	9.0	15.03	61.0	F	G1
8192.600	IN-EX	ACTROS 2646 B - Betoniera	-	5410532730	9.0	15.03	61.0	F	G1
8192.600	IN-EX	ACTROS 2646 S, 2646 LS - Tratto	-	5410532730	9.0	15.03	61.0	F	G1
8192.600	IN-EX	ACTROS 2648 K, 2648 LK - Cass	-	5410532730	9.0	15.03	61.0	F	G1
8192.600	IN-EX	ACTROS 2648 K, 2648 LK - Cass	-	5410532730	9.0	15.03	61.0	F	G1
8012.600	IN-EX	Actros 2648 K,LK	OM 542.921	5410531230	9.0	15.03	61.0	F	G1
8012.600	IN-EX	Actros 2648 K,LK	OM 542.940	5410531230	9.0	15.03	61.0	F	G1
8192.600	IN-EX	ACTROS 2648 S, 2648 LS - Tratto	-	5410532730	9.0	15.03	61.0	F	G1
8192.600	IN-EX	ACTROS 2648 S, 2648 LS - Tratto	-	5410532730	9.0	15.03	61.0	F	G1
8012.600	IN-EX	Actros 2648 S,LS	OM 542.921	5410531230	9.0	15.03	61.0	F	G1
8012.600	IN-EX	Actros 2648 S,LS	OM 542.940	5410531230	9.0	15.03	61.0	F	G1
8012.600	IN-EX	Actros 2648, 2648 L	OM 542.921	5410531230	9.0	15.03	61.0	F	G1
8192.600	IN-EX	ACTROS 2648, 2648 L - Pianale p	-	5410532730	9.0	15.03	61.0	F	G1
8192.600	IN-EX	ACTROS 2650 S, 2650 LS - Tratto	-	5410532730	9.0	15.03	61.0	F	G1
8192.600	IN-EX	ACTROS 2653 K, 2653 LK - Cass	-	5410532730	9.0	15.03	61.0	F	G1
8192.600	IN-EX	ACTROS 2653 S, 2653 LS - Tratto	-	5410532730	9.0	15.03	61.0	F	G1
8012.600	IN-EX	Actros 2653 S,LS	OM 542.920	5410531230	9.0	15.03	61.0	F	G1
8012.600	IN-EX	Actros 2653 S,LS	OM 542.942	5410531230	9.0	15.03	61.0	F	G1
8012.600	IN-EX	Actros 2653, 2653 L	OM 542.920	5410531230	9.0	15.03	61.0	F	G1
8192.600	IN-EX	ACTROS 2653, 2653 L - Pianale p	-	5410532730	9.0	15.03	61.0	F	G1
8192.600	IN-EX	ACTROS 2657 K, 2657 LK - Cass	-	5410532730	9.0	15.03	61.0	F	G1
8012.600	IN-EX	Actros 2657 K,LK	OM 542.922	5410531230	9.0	15.03	61.0	F	G1
8012.600	IN-EX	Actros 2657 K,LK	OM 542.944	5410531230	9.0	15.03	61.0	F	G1
8012.600	IN-EX	Actros 2657 L	OM 542.922	5410531230	9.0	15.03	61.0	F	G1
8192.600	IN-EX	ACTROS 2657 L - Pianale piatto /	-	5410532730	9.0	15.03	61.0	F	G1
8192.600	IN-EX	ACTROS 2657 S, 2657 LS - Tratto	-	5410532730	9.0	15.03	61.0	F	G1
8012.600	IN-EX	Actros 2657 S,LS	OM 542.922	5410531230	9.0	15.03	61.0	F	G1
8012.600	IN-EX	Actros 2657 S,LS	OM 542.944	5410531230	9.0	15.03	61.0	F	G1
8192.600	IN-EX	ACTROS 2665 LS - Trattore per s	-	5410532730	9.0	15.03	61.0	F	G1
8012.600	IN-EX	Actros 3231 B	OM 541.920	5410531230	9.0	15.03	61.0	F	G1
8012.600	IN-EX	Actros 3231 B	OM 541.940	5410531230	9.0	15.03	61.0	F	G1
8192.600	IN-EX	ACTROS 3231 B - Betoniera	-	5410532730	9.0	15.03	61.0	F	G1
8012.600	IN-EX	Actros 3231 K	OM 541.920	5410531230	9.0	15.03	61.0	F	G1
8012.600	IN-EX	Actros 3231 K	OM 541.940	5410531230	9.0	15.03	61.0	F	G1
8192.600	IN-EX	ACTROS 3231 K - Cassone ribalt	-	5410532730	9.0	15.03	61.0	F	G1
8012.600	IN-EX	Actros 3235	OM 541.922	5410531230	9.0	15.03	61.0	F	G1
8192.600	IN-EX	ACTROS 3235 - Pianale piatto / T	-	5410532730	9.0	15.03	61.0	F	G1
8012.600	IN-EX	Actros 3235 B	OM 541.922	5410531230	9.0	15.03	61.0	F	G1
8192.600	IN-EX	ACTROS 3235 B - Betoniera	-	5410532730	9.0	15.03	61.0	F	G1
8012.600	IN-EX	Actros 3235 K	OM 541.922	5410531230	9.0	15.03	61.0	F	G1
8192.600	IN-EX	ACTROS 3235 K - Cassone ribalt	-	5410532730	9.0	15.03	61.0	F	G1
8012.600	IN-EX	Actros 3240	OM 541.923	5410531230	9.0	15.03	61.0	F	G1
8192.600	IN-EX	ACTROS 3240 - Pianale piatto / T	-	5410532730	9.0	15.03	61.0	F	G1
8012.600	IN-EX	Actros 3240 B	OM 541.923	5410531230	9.0	15.03	61.0	F	G1
8192.600	IN-EX	ACTROS 3240 B - Betoniera	-	5410532730	9.0	15.03	61.0	F	G1
8012.600	IN-EX	Actros 3240 K	OM 541.923	5410531230	9.0	15.03	61.0	F	G1
8192.600	IN-EX	ACTROS 3240 K - Cassone ribalt	-	5410532730	9.0	15.03	61.0	F	G1
8012.600	IN-EX	Actros 3243	OM 541.925	5410531230	9.0	15.03	61.0	F	G1
8012.600	IN-EX	Actros 3243	OM 541.946	5410531230	9.0	15.03	61.0	F	G1
8192.600	IN-EX	ACTROS 3243 - Pianale piatto / T	-	5410532730	9.0	15.03	61.0	F	G1
8012.600	IN-EX	Actros 3243 B	OM 541.925	5410531230	9.0	15.03	61.0	F	G1
8012.600	IN-EX	Actros 3243 B	OM 541.946	5410531230	9.0	15.03	61.0	F	G1
8192.600	IN-EX	ACTROS 3243 B - Betoniera	-	5410532730	9.0	15.03	61.0	F	G1
8012.600	IN-EX	Actros 3243 K	OM 541.925	5410531230	9.0	15.03	61.0	F	G1

(D1) Internal diameter, (D2) External diameter, (B) Shape, (C) Material

VALVE GUIDES

MERCEDES BENZ

IVT Ref.	Type	Model	Engine	OEM Ref.	D1	D2	Length	B	C
8012.600	IN-EX	Actros 3243 K	OM 541.946	5410531230	9.0	15.03	61.0	F	G1
8192.600	IN-EX	ACTROS 3243 K - Cassone ribalt	-	5410532730	9.0	15.03	61.0	F	G1
8192.600	IN-EX	ACTROS 3246 B - Betoniera	-	5410532730	9.0	15.03	61.0	F	G1
8192.600	IN-EX	ACTROS 3246 K - Cassone ribalt	-	5410532730	9.0	15.03	61.0	F	G1
8012.600	IN-EX	Actros 3331	OM 541.920	5410531230	9.0	15.03	61.0	F	G1
8192.600	IN-EX	ACTROS 3331 - Pianale piatto / T	-	5410532730	9.0	15.03	61.0	F	G1
8012.600	IN-EX	Actros 3331 A	OM 541.926	5410531230	9.0	15.03	61.0	F	G1
8192.600	IN-EX	ACTROS 3331 A - Pianale piatto /	-	5410532730	9.0	15.03	61.0	F	G1
8012.600	IN-EX	Actros 3331 AK	OM 541.926	5410531230	9.0	15.03	61.0	F	G1
8012.600	IN-EX	Actros 3331 AK	OM 541.941	5410531230	9.0	15.03	61.0	F	G1
8192.600	IN-EX	ACTROS 3331 AK - Cassone ribal	-	5410532730	9.0	15.03	61.0	F	G1
8012.600	IN-EX	Actros 3331 AS	OM 541.926	5410531230	9.0	15.03	61.0	F	G1
8012.600	IN-EX	Actros 3331 AS	OM 541.941	5410531230	9.0	15.03	61.0	F	G1
8192.600	IN-EX	ACTROS 3331 AS - Trattore per s	-	5410532730	9.0	15.03	61.0	F	G1
8012.600	IN-EX	Actros 3331 B	OM 541.920	5410531230	9.0	15.03	61.0	F	G1
8012.600	IN-EX	Actros 3331 B	OM 541.940	5410531230	9.0	15.03	61.0	F	G1
8192.600	IN-EX	ACTROS 3331 B - Betoniera	-	5410532730	9.0	15.03	61.0	F	G1
8012.600	IN-EX	Actros 3331 K	OM 541.920	5410531230	9.0	15.03	61.0	F	G1
8012.600	IN-EX	Actros 3331 K	OM 541.940	5410531230	9.0	15.03	61.0	F	G1
8192.600	IN-EX	ACTROS 3331 K - Cassone ribalt	-	5410532730	9.0	15.03	61.0	F	G1
8012.600	IN-EX	Actros 3331 S	OM 541.920	5410531230	9.0	15.03	61.0	F	G1
8012.600	IN-EX	Actros 3331 S	OM 541.940	5410531230	9.0	15.03	61.0	F	G1
8192.600	IN-EX	ACTROS 3331 S - Trattore per se	-	5410532730	9.0	15.03	61.0	F	G1
8012.600	IN-EX	Actros 3335	OM 541.922	5410531230	9.0	15.03	61.0	F	G1
8192.600	IN-EX	ACTROS 3335 - Pianale piatto / T	-	5410532730	9.0	15.03	61.0	F	G1
8192.600	IN-EX	ACTROS 3335 AK - Cassone ribal	-	5410532730	9.0	15.03	61.0	F	G1
8012.600	IN-EX	Actros 3335 B	OM 541.922	5410531230	9.0	15.03	61.0	F	G1
8192.600	IN-EX	ACTROS 3335 B - Betoniera	-	5410532730	9.0	15.03	61.0	F	G1
8012.600	IN-EX	Actros 3335 K	OM 541.922	5410531230	9.0	15.03	61.0	F	G1
8192.600	IN-EX	ACTROS 3335 K - Cassone ribalt	-	5410532730	9.0	15.03	61.0	F	G1
8012.600	IN-EX	Actros 3335 S	OM 541.922	5410531230	9.0	15.03	61.0	F	G1
8192.600	IN-EX	ACTROS 3335 S - Trattore per se	-	5410532730	9.0	15.03	61.0	F	G1
8192.600	IN-EX	ACTROS 3336 S - Trattore per se	-	5410532730	9.0	15.03	61.0	F	G1
8012.600	IN-EX	Actros 3340	OM 541.923	5410531230	9.0	15.03	61.0	F	G1
8192.600	IN-EX	ACTROS 3340 - Pianale piatto / T	-	5410532730	9.0	15.03	61.0	F	G1
8012.600	IN-EX	Actros 3340 A	OM 541.924	5410531230	9.0	15.03	61.0	F	G1
8192.600	IN-EX	ACTROS 3340 A - Pianale piatto /	-	5410532730	9.0	15.03	61.0	F	G1
8012.600	IN-EX	Actros 3340 AK	OM 541.924	5410531230	9.0	15.03	61.0	F	G1
8012.600	IN-EX	Actros 3340 AK	OM 541.945	5410531230	9.0	15.03	61.0	F	G1
8192.600	IN-EX	ACTROS 3340 AK - Cassone ribal	-	5410532730	9.0	15.03	61.0	F	G1
8012.600	IN-EX	Actros 3340 AS	OM 541.924	5410531230	9.0	15.03	61.0	F	G1
8012.600	IN-EX	Actros 3340 AS	OM 541.925	5410531230	9.0	15.03	61.0	F	G1
8192.600	IN-EX	ACTROS 3340 AS - Trattore per s	-	5410532730	9.0	15.03	61.0	F	G1
8012.600	IN-EX	Actros 3340 B	OM 541.923	5410531230	9.0	15.03	61.0	F	G1
8192.600	IN-EX	ACTROS 3340 B - Betoniera	-	5410532730	9.0	15.03	61.0	F	G1
8192.600	IN-EX	ACTROS 3340 B - Betoniera	-	5410532730	9.0	15.03	61.0	F	G1
8012.600	IN-EX	Actros 3340 K	OM 541.923	5410531230	9.0	15.03	61.0	F	G1
8192.600	IN-EX	ACTROS 3340 K - Cassone ribalt	-	5410532730	9.0	15.03	61.0	F	G1
8012.600	IN-EX	Actros 3340 S	OM 541.923	5410531230	9.0	15.03	61.0	F	G1
8192.600	IN-EX	ACTROS 3340 S - Trattore per se	-	5410532730	9.0	15.03	61.0	F	G1
8192.600	IN-EX	ACTROS 3341 S - Trattore per se	-	5410532730	9.0	15.03	61.0	F	G1
8012.600	IN-EX	Actros 3343	OM 541.925	5410531230	9.0	15.03	61.0	F	G1
8192.600	IN-EX	ACTROS 3343 - Pianale piatto / T	-	5410532730	9.0	15.03	61.0	F	G1
8012.600	IN-EX	Actros 3343 AK	OM 541.921	5410531230	9.0	15.03	61.0	F	G1
8012.600	IN-EX	Actros 3343 AK	OM 541.947	5410531230	9.0	15.03	61.0	F	G1
8192.600	IN-EX	ACTROS 3343 AK - Cassone ribal	-	5410532730	9.0	15.03	61.0	F	G1
8012.600	IN-EX	Actros 3343 AS	OM 541.921	5410531230	9.0	15.03	61.0	F	G1
8012.600	IN-EX	Actros 3343 AS	OM 541.947	5410531230	9.0	15.03	61.0	F	G1
8192.600	IN-EX	ACTROS 3343 AS - Trattore per s	-	5410532730	9.0	15.03	61.0	F	G1
8012.600	IN-EX	Actros 3343 B	OM 541.925	5410531230	9.0	15.03	61.0	F	G1
8192.600	IN-EX	ACTROS 3343 B - Betoniera	-	5410532730	9.0	15.03	61.0	F	G1
8012.600	IN-EX	Actros 3343 K	OM 541.925	5410531230	9.0	15.03	61.0	F	G1

(D1) Internal diameter, (D2) External diameter, (B) Shape, (C) Material

VALVE GUIDES

MERCEDES BENZ

IVT Ref.	Type	Model	Engine	OEM Ref.	D1	D2	Length	B	C
8012.600	IN-EX	Actros 3343 K	OM 541.946	5410531230	9.0	15.03	61.0	F	G1
8192.600	IN-EX	ACTROS 3343 K - Cassone ribalt	-	5410532730	9.0	15.03	61.0	F	G1
8012.600	IN-EX	Actros 3343 S	OM 541.925	5410531230	9.0	15.03	61.0	F	G1
8012.600	IN-EX	Actros 3343 S	OM 541.946	5410531230	9.0	15.03	61.0	F	G1
8192.600	IN-EX	ACTROS 3343 S - Trattore per se	-	5410532730	9.0	15.03	61.0	F	G1
8192.600	IN-EX	ACTROS 3346 - Pianale piatto / T	-	5410532730	9.0	15.03	61.0	F	G1
8192.600	IN-EX	ACTROS 3346 AK - Cassone ribal	-	5410532730	9.0	15.03	61.0	F	G1
8192.600	IN-EX	ACTROS 3346 AS - Trattore per s	-	5410532730	9.0	15.03	61.0	F	G1
8192.600	IN-EX	ACTROS 3346 K - Cassone ribalt	-	5410532730	9.0	15.03	61.0	F	G1
8192.600	IN-EX	ACTROS 3346 S - Trattore per se	-	5410532730	9.0	15.03	61.0	F	G1
8012.600	IN-EX	Actros 3348	OM 542.921	5410531230	9.0	15.03	61.0	F	G1
8192.600	IN-EX	ACTROS 3348 - Pianale piatto / T	-	5410532730	9.0	15.03	61.0	F	G1
8012.600	IN-EX	Actros 3348 AK	OM 542.925	5410531230	9.0	15.03	61.0	F	G1
8192.600	IN-EX	ACTROS 3348 AK - Cassone ribal	-	5410532730	9.0	15.03	61.0	F	G1
8012.600	IN-EX	Actros 3348 AS	OM 542.925	5410531230	9.0	15.03	61.0	F	G1
8192.600	IN-EX	ACTROS 3348 AS - Trattore per s	-	5410532730	9.0	15.03	61.0	F	G1
8012.600	IN-EX	Actros 3348 K	OM 542.921	5410531230	9.0	15.03	61.0	F	G1
8012.600	IN-EX	Actros 3348 K	OM 542.940	5410531230	9.0	15.03	61.0	F	G1
8192.600	IN-EX	ACTROS 3348 K - Cassone ribalt	-	5410532730	9.0	15.03	61.0	F	G1
8012.600	IN-EX	Actros 3348 S	OM 542.921	5410531230	9.0	15.03	61.0	F	G1
8192.600	IN-EX	ACTROS 3348 S - Trattore per se	-	5410532730	9.0	15.03	61.0	F	G1
8192.600	IN-EX	ACTROS 3350 AK - Cassone ribal	-	5410532730	9.0	15.03	61.0	F	G1
8192.600	IN-EX	ACTROS 3350 AS - Trattore per s	-	5410532730	9.0	15.03	61.0	F	G1
8192.600	IN-EX	ACTROS 3350 K - Cassone ribalt	-	5410532730	9.0	15.03	61.0	F	G1
8192.600	IN-EX	ACTROS 3350 S - Trattore per se	-	5410532730	9.0	15.03	61.0	F	G1
8012.600	IN-EX	Actros 3353	OM 542.920	5410531230	9.0	15.03	61.0	F	G1
8192.600	IN-EX	ACTROS 3353 - Pianale piatto / T	-	5410532730	9.0	15.03	61.0	F	G1
8012.600	IN-EX	Actros 3353 AS	OM 542.920	5410531230	9.0	15.03	61.0	F	G1
8012.600	IN-EX	Actros 3353 AS	OM 542.926	5410531230	9.0	15.03	61.0	F	G1
8012.600	IN-EX	Actros 3353 AS	OM 542.943	5410531230	9.0	15.03	61.0	F	G1
8192.600	IN-EX	ACTROS 3353 AS - Pianale piatto	-	5410532730	9.0	15.03	61.0	F	G1
8012.600	IN-EX	Actros 3353 S	OM 542.920	5410531230	9.0	15.03	61.0	F	G1
8012.600	IN-EX	Actros 3353 S	OM 542.942	5410531230	9.0	15.03	61.0	F	G1
8192.600	IN-EX	ACTROS 3353 S - Trattore per se	-	5410532730	9.0	15.03	61.0	F	G1
8012.600	IN-EX	Actros 3357	OM 542.922	5410531230	9.0	15.03	61.0	F	G1
8192.600	IN-EX	ACTROS 3357 - Pianale piatto / T	-	5410532730	9.0	15.03	61.0	F	G1
8012.600	IN-EX	Actros 3357 S	OM 542.922	5410531230	9.0	15.03	61.0	F	G1
8012.600	IN-EX	Actros 3357 S	OM 542.944	5410531230	9.0	15.03	61.0	F	G1
8192.600	IN-EX	ACTROS 3357 S - Trattore per se	-	5410532730	9.0	15.03	61.0	F	G1
8012.600	IN-EX	Actros 4140 AK	OM 541.924	5410531230	9.0	15.03	61.0	F	G1
8012.600	IN-EX	Actros 4140 AK	OM 541.945	5410531230	9.0	15.03	61.0	F	G1
8192.600	IN-EX	ACTROS 4140 AK - Cassone ribal	-	5410532730	9.0	15.03	61.0	F	G1
8012.600	IN-EX	Actros 4140 B	OM 541.923	5410531230	9.0	15.03	61.0	F	G1
8192.600	IN-EX	ACTROS 4140 B - Betoniera	-	5410532730	9.0	15.03	61.0	F	G1
8012.600	IN-EX	Actros 4140 K	OM 541.923	5410531230	9.0	15.03	61.0	F	G1
8012.600	IN-EX	Actros 4140 K	OM 541.924	5410531230	9.0	15.03	61.0	F	G1
8012.600	IN-EX	Actros 4140 K	OM 541.945	5410531230	9.0	15.03	61.0	F	G1
8192.600	IN-EX	ACTROS 4140 K - Cassone ribalt	-	5410532730	9.0	15.03	61.0	F	G1
8192.600	IN-EX	ACTROS 4140 K - Cassone ribalt	-	5410532730	9.0	15.03	61.0	F	G1
8012.600	IN-EX	Actros 4143 AK	OM 541.921	5410531230	9.0	15.03	61.0	F	G1
8012.600	IN-EX	Actros 4143 AK	OM 541.947	5410531230	9.0	15.03	61.0	F	G1
8192.600	IN-EX	ACTROS 4143 AK - Cassone ribal	-	5410532730	9.0	15.03	61.0	F	G1
8012.600	IN-EX	Actros 4143 K	OM 541.925	5410531230	9.0	15.03	61.0	F	G1
8012.600	IN-EX	Actros 4143 K	OM 541.946	5410531230	9.0	15.03	61.0	F	G1
8192.600	IN-EX	ACTROS 4143 K - Cassone ribalt	-	5410532730	9.0	15.03	61.0	F	G1
8192.600	IN-EX	ACTROS 4143 K - Cassone ribalt	-	5410532730	9.0	15.03	61.0	F	G1
8192.600	IN-EX	ACTROS 4146 AK - Cassone ribal	-	5410532730	9.0	15.03	61.0	F	G1
8192.600	IN-EX	ACTROS 4146 K - Cassone ribalt	-	5410532730	9.0	15.03	61.0	F	G1
8012.600	IN-EX	Actros 4148 AK	OM 542.925	5410531230	9.0	15.03	61.0	F	G1
8192.600	IN-EX	ACTROS 4148 AK - Cassone ribal	-	5410532730	9.0	15.03	61.0	F	G1
8012.600	IN-EX	Actros 4148 K	OM 542.921	5410531230	9.0	15.03	61.0	F	G1
8012.600	IN-EX	Actros 4148 K	OM 542.925	5410531230	9.0	15.03	61.0	F	G1

(D1) Internal diameter, (D2) External diameter, (B) Shape, (C) Material

VALVE GUIDES

MERCEDES BENZ

IVT Ref.	Type	Model	Engine	OEM Ref.	D1	D2	Length	B	C
8192.600	IN-EX	ACTROS 4148 K - Cassone ribalt	-	5410532730	9.0	15.03	61.0	F	G1
8192.600	IN-EX	ACTROS 4148 K - Cassone ribalt	-	5410532730	9.0	15.03	61.0	F	G1
8012.600	IN-EX	Actros MP2/MP3 1832 AK	OM 541.940	5410531230	9.0	15.03	61.0	F	G1
8012.600	IN-EX	Actros MP2/MP3 1832 K	OM 541.940	5410531230	9.0	15.03	61.0	F	G1
8012.600	IN-EX	Actros MP2/MP3 1832 K	OM 541.970	5410531230	9.0	15.03	61.0	F	G1
8012.600	IN-EX	Actros MP2/MP3 1832 L, LL	OM 541.940	5410531230	9.0	15.03	61.0	F	G1
8012.600	IN-EX	Actros MP2/MP3 1832 L, LL	OM 541.970	5410531230	9.0	15.03	61.0	F	G1
8012.600	IN-EX	Actros MP2/MP3 1832 LS, LLS	OM 541.940	5410531230	9.0	15.03	61.0	F	G1
8012.600	IN-EX	Actros MP2/MP3 1832 LS, LLS	OM 541.970	5410531230	9.0	15.03	61.0	F	G1
8012.600	IN-EX	Actros MP2/MP3 1836 AK	OM 541.942	5410531230	9.0	15.03	61.0	F	G1
8012.600	IN-EX	Actros MP2/MP3 1836 K	OM 541.942	5410531230	9.0	15.03	61.0	F	G1
8012.600	IN-EX	Actros MP2/MP3 1836 K	OM 541.972	5410531230	9.0	15.03	61.0	F	G1
8012.600	IN-EX	Actros MP2/MP3 1836 L, LL	OM 541.942	5410531230	9.0	15.03	61.0	F	G1
8012.600	IN-EX	Actros MP2/MP3 1836 LS, LLS	OM 541.942	5410531230	9.0	15.03	61.0	F	G1
8012.600	IN-EX	Actros MP2/MP3 1841 A	OM 541.974	5410531230	9.0	15.03	61.0	F	G1
8012.600	IN-EX	Actros MP2/MP3 1841 K	OM 541.944	5410531230	9.0	15.03	61.0	F	G1
8012.600	IN-EX	Actros MP2/MP3 1841 L, LL	OM 541.944	5410531230	9.0	15.03	61.0	F	G1
8012.600	IN-EX	Actros MP2/MP3 1841 L, LL	OM 541.974	5410531230	9.0	15.03	61.0	F	G1
8012.600	IN-EX	Actros MP2/MP3 1841 LS, LLS	OM 541.944	5410531230	9.0	15.03	61.0	F	G1
8012.600	IN-EX	Actros MP2/MP3 1841 LS, LLS	OM 541.974	5410531230	9.0	15.03	61.0	F	G1
8012.600	IN-EX	Actros MP2/MP3 1844 A	OM 541.946	5410531230	9.0	15.03	61.0	F	G1
8012.600	IN-EX	Actros MP2/MP3 1844 A	OM 541.976	5410531230	9.0	15.03	61.0	F	G1
8012.600	IN-EX	Actros MP2/MP3 1844 AK	OM 541.921	5410531230	9.0	15.03	61.0	F	G1
8012.600	IN-EX	Actros MP2/MP3 1844 AK	OM 541.946	5410531230	9.0	15.03	61.0	F	G1
8012.600	IN-EX	Actros MP2/MP3 1844 AK	OM 541.947	5410531230	9.0	15.03	61.0	F	G1
8012.600	IN-EX	Actros MP2/MP3 1844 K	OM 541.946	5410531230	9.0	15.03	61.0	F	G1
8012.600	IN-EX	Actros MP2/MP3 1844 K	OM 541.976	5410531230	9.0	15.03	61.0	F	G1
8012.600	IN-EX	Actros MP2/MP3 1844 L, LL	OM 541.946	5410531230	9.0	15.03	61.0	F	G1
8012.600	IN-EX	Actros MP2/MP3 1844 L, LL	OM 541.976	5410531230	9.0	15.03	61.0	F	G1
8012.600	IN-EX	Actros MP2/MP3 1844 LS, LLS	OM 541.946	5410531230	9.0	15.03	61.0	F	G1
8012.600	IN-EX	Actros MP2/MP3 1844 LS, LLS	OM 541.976	5410531230	9.0	15.03	61.0	F	G1
8012.600	IN-EX	Actros MP2/MP3 1846 AK	OM 541.948	5410531230	9.0	15.03	61.0	F	G1
8012.600	IN-EX	Actros MP2/MP3 1846 K	OM 541.948	5410531230	9.0	15.03	61.0	F	G1
8012.600	IN-EX	Actros MP2/MP3 1846 K	OM 541.980	5410531230	9.0	15.03	61.0	F	G1
8012.600	IN-EX	Actros MP2/MP3 1846 L, LL	OM 541.948	5410531230	9.0	15.03	61.0	F	G1
8012.600	IN-EX	Actros MP2/MP3 1846 L, LL	OM 541.980	5410531230	9.0	15.03	61.0	F	G1
8012.600	IN-EX	Actros MP2/MP3 1846 LS, LLS	OM 541.948	5410531230	9.0	15.03	61.0	F	G1
8012.600	IN-EX	Actros MP2/MP3 1846 LS, LLS	OM 541.980	5410531230	9.0	15.03	61.0	F	G1
8012.600	IN-EX	Actros MP2/MP3 1848 AK	OM 541.948	5410531230	9.0	15.03	61.0	F	G1
8012.600	IN-EX	Actros MP2/MP3 1848 K	OM 541.948	5410531230	9.0	15.03	61.0	F	G1
8012.600	IN-EX	Actros MP2/MP3 1848 K	OM 541.978	5410531230	9.0	15.03	61.0	F	G1
8012.600	IN-EX	Actros MP2/MP3 1848 L, LL	OM 541.948	5410531230	9.0	15.03	61.0	F	G1
8012.600	IN-EX	Actros MP2/MP3 1848 L, LL	OM 541.978	5410531230	9.0	15.03	61.0	F	G1
8012.600	IN-EX	Actros MP2/MP3 1848 LS, LLS	OM 541.948	5410531230	9.0	15.03	61.0	F	G1
8012.600	IN-EX	Actros MP2/MP3 1848 LS, LLS	OM 541.978	5410531230	9.0	15.03	61.0	F	G1
8012.600	IN-EX	Actros MP2/MP3 1850, 1851 AK	OM 542.940	5410531230	9.0	15.03	61.0	F	G1
8012.600	IN-EX	Actros MP2/MP3 1850, 1851 AK	OM 542.941	5410531230	9.0	15.03	61.0	F	G1
8012.600	IN-EX	Actros MP2/MP3 1850, 1851 AK	OM 542.960	5410531230	9.0	15.03	61.0	F	G1
8012.600	IN-EX	Actros MP2/MP3 1850, 1851 AK	OM 542.961	5410531230	9.0	15.03	61.0	F	G1
8012.600	IN-EX	Actros MP2/MP3 1850, 1851 K	OM 542.940	5410531230	9.0	15.03	61.0	F	G1
8012.600	IN-EX	Actros MP2/MP3 1850, 1851 K	OM 542.960	5410531230	9.0	15.03	61.0	F	G1
8012.600	IN-EX	Actros MP2/MP3 1850, 1851 L, LL	OM 542.940	5410531230	9.0	15.03	61.0	F	G1
8012.600	IN-EX	Actros MP2/MP3 1850, 1851 L, LL	OM 542.960	5410531230	9.0	15.03	61.0	F	G1
8012.600	IN-EX	Actros MP2/MP3 1850, 1851 LS,	OM 542.940	5410531230	9.0	15.03	61.0	F	G1
8012.600	IN-EX	Actros MP2/MP3 1850, 1851 LS,	OM 542.960	5410531230	9.0	15.03	61.0	F	G1
8012.600	IN-EX	Actros MP2/MP3 1854 L	OM 542.942	5410531230	9.0	15.03	61.0	F	G1
8012.600	IN-EX	Actros MP2/MP3 1854 LS	OM 542.942	5410531230	9.0	15.03	61.0	F	G1
8012.600	IN-EX	Actros MP2/MP3 1858 L	OM 542.944	5410531230	9.0	15.03	61.0	F	G1
8012.600	IN-EX	Actros MP2/MP3 1858 LS	OM 542.944	5410531230	9.0	15.03	61.0	F	G1
8012.600	IN-EX	Actros MP2/MP3 1860 L, LL	OM 542.964	5410531230	9.0	15.03	61.0	F	G1
8012.600	IN-EX	Actros MP2/MP3 2032	OM 541.940	5410531230	9.0	15.03	61.0	F	G1
8012.600	IN-EX	Actros MP2/MP3 2032 A, AE	OM 541.940	5410531230	9.0	15.03	61.0	F	G1

(D1) Internal diameter, (D2) External diameter, (B) Shape, (C) Material

VALVE GUIDES

MERCEDES BENZ

IVT Ref.	Type	Model	Engine	OEM Ref.	D1	D2	Length	B	C
8012.600	IN-EX	Actros MP2/MP3 2032 AK	OM 541.940	5410531230	9.0	15.03	61.0	F	G1
8012.600	IN-EX	Actros MP2/MP3 2032 AK	OM 541.941	5410531230	9.0	15.03	61.0	F	G1
8012.600	IN-EX	Actros MP2/MP3 2032 AS	OM 541.941	5410531230	9.0	15.03	61.0	F	G1
8012.600	IN-EX	Actros MP2/MP3 2032 K	OM 541.940	5410531230	9.0	15.03	61.0	F	G1
8012.600	IN-EX	Actros MP2/MP3 2032 S	OM 541.940	5410531230	9.0	15.03	61.0	F	G1
8012.600	IN-EX	Actros MP2/MP3 2033 A, AE	OM 541.941	5410531230	9.0	15.03	61.0	F	G1
8012.600	IN-EX	Actros MP2/MP3 2036	OM 541.942	5410531230	9.0	15.03	61.0	F	G1
8012.600	IN-EX	Actros MP2/MP3 2036 A, AE	OM 541.942	5410531230	9.0	15.03	61.0	F	G1
8012.600	IN-EX	Actros MP2/MP3 2036 A, AE	OM 541.943	5410531230	9.0	15.03	61.0	F	G1
8012.600	IN-EX	Actros MP2/MP3 2036 AK	OM 541.942	5410531230	9.0	15.03	61.0	F	G1
8012.600	IN-EX	Actros MP2/MP3 2036 AS	OM 541.943	5410531230	9.0	15.03	61.0	F	G1
8012.600	IN-EX	Actros MP2/MP3 2036 K	OM 541.942	5410531230	9.0	15.03	61.0	F	G1
8012.600	IN-EX	Actros MP2/MP3 2036 K	OM 541.972	5410531230	9.0	15.03	61.0	F	G1
8012.600	IN-EX	Actros MP2/MP3 2036 S	OM 541.942	5410531230	9.0	15.03	61.0	F	G1
8012.600	IN-EX	Actros MP2/MP3 2036 S	OM 541.972	5410531230	9.0	15.03	61.0	F	G1
8012.600	IN-EX	Actros MP2/MP3 2041	OM 541.944	5410531230	9.0	15.03	61.0	F	G1
8012.600	IN-EX	Actros MP2/MP3 2041	OM 541.974	5410531230	9.0	15.03	61.0	F	G1
8012.600	IN-EX	Actros MP2/MP3 2041 AK	OM 541.944	5410531230	9.0	15.03	61.0	F	G1
8012.600	IN-EX	Actros MP2/MP3 2041 AK	OM 541.945	5410531230	9.0	15.03	61.0	F	G1
8012.600	IN-EX	Actros MP2/MP3 2041 K	OM 541.944	5410531230	9.0	15.03	61.0	F	G1
8012.600	IN-EX	Actros MP2/MP3 2041 K	OM 541.974	5410531230	9.0	15.03	61.0	F	G1
8012.600	IN-EX	Actros MP2/MP3 2041 S	OM 541.944	5410531230	9.0	15.03	61.0	F	G1
8012.600	IN-EX	Actros MP2/MP3 2041 S	OM 541.974	5410531230	9.0	15.03	61.0	F	G1
8012.600	IN-EX	Actros MP2/MP3 2044	OM 541.946	5410531230	9.0	15.03	61.0	F	G1
8012.600	IN-EX	Actros MP2/MP3 2044	OM 541.976	5410531230	9.0	15.03	61.0	F	G1
8012.600	IN-EX	Actros MP2/MP3 2044 K	OM 541.946	5410531230	9.0	15.03	61.0	F	G1
8012.600	IN-EX	Actros MP2/MP3 2044 K	OM 541.976	5410531230	9.0	15.03	61.0	F	G1
8012.600	IN-EX	Actros MP2/MP3 2044 S	OM 541.946	5410531230	9.0	15.03	61.0	F	G1
8012.600	IN-EX	Actros MP2/MP3 2044 S	OM 541.976	5410531230	9.0	15.03	61.0	F	G1
8012.600	IN-EX	Actros MP2/MP3 2046	OM 541.980	5410531230	9.0	15.03	61.0	F	G1
8012.600	IN-EX	Actros MP2/MP3 2046 AS	OM 541.948	5410531230	9.0	15.03	61.0	F	G1
8012.600	IN-EX	Actros MP2/MP3 2046 K	OM 541.980	5410531230	9.0	15.03	61.0	F	G1
8012.600	IN-EX	Actros MP2/MP3 2046 S	OM 541.980	5410531230	9.0	15.03	61.0	F	G1
8012.600	IN-EX	Actros MP2/MP3 2048 AK	OM 541.948	5410531230	9.0	15.03	61.0	F	G1
8012.600	IN-EX	Actros MP2/MP3 2048 K	OM 541.978	5410531230	9.0	15.03	61.0	F	G1
8012.600	IN-EX	Actros MP2/MP3 2050 S	OM 542.940	5410531230	9.0	15.03	61.0	F	G1
8012.600	IN-EX	Actros MP2/MP3 2050 S	OM 542.941	5410531230	9.0	15.03	61.0	F	G1
8012.600	IN-EX	Actros MP2/MP3 2051 AS	OM 542.960	5410531230	9.0	15.03	61.0	F	G1
8012.600	IN-EX	Actros MP2/MP3 2532 L, LL	OM 541.940	5410531230	9.0	15.03	61.0	F	G1
8012.600	IN-EX	Actros MP2/MP3 2532 LS	OM 541.940	5410531230	9.0	15.03	61.0	F	G1
8012.600	IN-EX	Actros MP2/MP3 2536 L, LL	OM 541.942	5410531230	9.0	15.03	61.0	F	G1
8012.600	IN-EX	Actros MP2/MP3 2536 LS	OM 541.942	5410531230	9.0	15.03	61.0	F	G1
8012.600	IN-EX	Actros MP2/MP3 2541 L, LL	OM 541.944	5410531230	9.0	15.03	61.0	F	G1
8012.600	IN-EX	Actros MP2/MP3 2541 L, LL	OM 541.974	5410531230	9.0	15.03	61.0	F	G1
8012.600	IN-EX	Actros MP2/MP3 2541 LS	OM 541.944	5410531230	9.0	15.03	61.0	F	G1
8012.600	IN-EX	Actros MP2/MP3 2544 L, LL	OM 541.946	5410531230	9.0	15.03	61.0	F	G1
8012.600	IN-EX	Actros MP2/MP3 2544 L, LL	OM 541.976	5410531230	9.0	15.03	61.0	F	G1
8012.600	IN-EX	Actros MP2/MP3 2544 LS	OM 541.976	5410531230	9.0	15.03	61.0	F	G1
8012.600	IN-EX	Actros MP2/MP3 2546 LS	OM 541.980	5410531230	9.0	15.03	61.0	F	G1
8012.600	IN-EX	Actros MP2/MP3 2548 L, LL	OM 541.948	5410531230	9.0	15.03	61.0	F	G1
8012.600	IN-EX	Actros MP2/MP3 2548 LS	OM 541.948	5410531230	9.0	15.03	61.0	F	G1
8012.600	IN-EX	Actros MP2/MP3 2548 LS	OM 541.978	5410531230	9.0	15.03	61.0	F	G1
8012.600	IN-EX	Actros MP2/MP3 2551 LS	OM 542.960	5410531230	9.0	15.03	61.0	F	G1
8012.600	IN-EX	Actros MP2/MP3 2555 LS	OM 542.962	5410531230	9.0	15.03	61.0	F	G1
8012.600	IN-EX	Actros MP2/MP3 2560 L, LL	OM 542.964	5410531230	9.0	15.03	61.0	F	G1
8012.600	IN-EX	Actros MP2/MP3 2632 B	OM 541.970	5410531230	9.0	15.03	61.0	F	G1
8012.600	IN-EX	Actros MP2/MP3 2632 K, LK	OM 541.940	5410531230	9.0	15.03	61.0	F	G1
8012.600	IN-EX	Actros MP2/MP3 2632 K, LK	OM 541.970	5410531230	9.0	15.03	61.0	F	G1
8012.600	IN-EX	Actros MP2/MP3 2632 L, LL	OM 541.940	5410531230	9.0	15.03	61.0	F	G1
8012.600	IN-EX	Actros MP2/MP3 2632 L, LL	OM 541.970	5410531230	9.0	15.03	61.0	F	G1
8012.600	IN-EX	Actros MP2/MP3 2632 LS	OM 541.940	5410531230	9.0	15.03	61.0	F	G1
8012.600	IN-EX	Actros MP2/MP3 2636 B	OM 541.972	5410531230	9.0	15.03	61.0	F	G1

(D1) Internal diameter, (D2) External diameter, (B) Shape, (C) Material

VALVE GUIDES

MERCEDES BENZ

IVT Ref.	Type	Model	Engine	OEM Ref.	D1	D2	Length	B	C
8012.600	IN-EX	Actros MP2/MP3 2636 K, LK	OM 541.942	5410531230	9.0	15.03	61.0	F	G1
8012.600	IN-EX	Actros MP2/MP3 2636 K, LK	OM 541.972	5410531230	9.0	15.03	61.0	F	G1
8012.600	IN-EX	Actros MP2/MP3 2636 L, LL	OM 541.942	5410531230	9.0	15.03	61.0	F	G1
8012.600	IN-EX	Actros MP2/MP3 2636 LS	OM 541.942	5410531230	9.0	15.03	61.0	F	G1
8012.600	IN-EX	Actros MP2/MP3 2636 LS	OM 541.972	5410531230	9.0	15.03	61.0	F	G1
8012.600	IN-EX	Actros MP2/MP3 2641 B	OM 541.974	5410531230	9.0	15.03	61.0	F	G1
8012.600	IN-EX	Actros MP2/MP3 2641 K, LK	OM 541.944	5410531230	9.0	15.03	61.0	F	G1
8012.600	IN-EX	Actros MP2/MP3 2641 K, LK	OM 541.974	5410531230	9.0	15.03	61.0	F	G1
8012.600	IN-EX	Actros MP2/MP3 2641 L, LL	OM 541.944	5410531230	9.0	15.03	61.0	F	G1
8012.600	IN-EX	Actros MP2/MP3 2641 L, LL	OM 541.974	5410531230	9.0	15.03	61.0	F	G1
8012.600	IN-EX	Actros MP2/MP3 2641 S, LS	OM 541.944	5410531230	9.0	15.03	61.0	F	G1
8012.600	IN-EX	Actros MP2/MP3 2644 B	OM 541.976	5410531230	9.0	15.03	61.0	F	G1
8012.600	IN-EX	Actros MP2/MP3 2644 K, LK	OM 541.946	5410531230	9.0	15.03	61.0	F	G1
8012.600	IN-EX	Actros MP2/MP3 2644 K, LK	OM 541.976	5410531230	9.0	15.03	61.0	F	G1
8012.600	IN-EX	Actros MP2/MP3 2644 L, LL	OM 541.946	5410531230	9.0	15.03	61.0	F	G1
8012.600	IN-EX	Actros MP2/MP3 2644 L, LL	OM 541.976	5410531230	9.0	15.03	61.0	F	G1
8012.600	IN-EX	Actros MP2/MP3 2644 S, LS	OM 541.946	5410531230	9.0	15.03	61.0	F	G1
8012.600	IN-EX	Actros MP2/MP3 2646 B	OM 541.980	5410531230	9.0	15.03	61.0	F	G1
8012.600	IN-EX	Actros MP2/MP3 2646 K, LK	OM 541.980	5410531230	9.0	15.03	61.0	F	G1
8012.600	IN-EX	Actros MP2/MP3 2646 L, LL	OM 541.980	5410531230	9.0	15.03	61.0	F	G1
8012.600	IN-EX	Actros MP2/MP3 2646 S, LS	OM 541.980	5410531230	9.0	15.03	61.0	F	G1
8012.600	IN-EX	Actros MP2/MP3 2648 B	OM 541.948	5410531230	9.0	15.03	61.0	F	G1
8012.600	IN-EX	Actros MP2/MP3 2648 B	OM 541.978	5410531230	9.0	15.03	61.0	F	G1
8012.600	IN-EX	Actros MP2/MP3 2648 K, LK	OM 541.948	5410531230	9.0	15.03	61.0	F	G1
8012.600	IN-EX	Actros MP2/MP3 2648 K, LK	OM 541.978	5410531230	9.0	15.03	61.0	F	G1
8012.600	IN-EX	Actros MP2/MP3 2648 L, LL	OM 541.980	5410531230	9.0	15.03	61.0	F	G1
8012.600	IN-EX	Actros MP2/MP3 2648 S, LS	OM 541.948	5410531230	9.0	15.03	61.0	F	G1
8012.600	IN-EX	Actros MP2/MP3 2650 K, LK	OM 542.940	5410531230	9.0	15.03	61.0	F	G1
8012.600	IN-EX	Actros MP2/MP3 2650 K, LK	OM 542.960	5410531230	9.0	15.03	61.0	F	G1
8012.600	IN-EX	Actros MP2/MP3 2650 L, LL	OM 542.940	5410531230	9.0	15.03	61.0	F	G1
8012.600	IN-EX	Actros MP2/MP3 2650 S, LS	OM 542.940	5410531230	9.0	15.03	61.0	F	G1
8012.600	IN-EX	Actros MP2/MP3 2651 S, LS	OM 542.960	5410531230	9.0	15.03	61.0	F	G1
8012.600	IN-EX	Actros MP2/MP3 2654 K, LK	OM 542.942	5410531230	9.0	15.03	61.0	F	G1
8012.600	IN-EX	Actros MP2/MP3 2654 K, LK	OM 542.962	5410531230	9.0	15.03	61.0	F	G1
8012.600	IN-EX	Actros MP2/MP3 2654 L, LL	OM 542.942	5410531230	9.0	15.03	61.0	F	G1
8012.600	IN-EX	Actros MP2/MP3 2654 S, LS	OM 542.942	5410531230	9.0	15.03	61.0	F	G1
8012.600	IN-EX	Actros MP2/MP3 2655 S, LS	OM 542.962	5410531230	9.0	15.03	61.0	F	G1
8012.600	IN-EX	Actros MP2/MP3 2658 K, LK	OM 542.944	5410531230	9.0	15.03	61.0	F	G1
8012.600	IN-EX	Actros MP2/MP3 2658 L	OM 542.944	5410531230	9.0	15.03	61.0	F	G1
8012.600	IN-EX	Actros MP2/MP3 2658 LS	OM 542.944	5410531230	9.0	15.03	61.0	F	G1
8012.600	IN-EX	Actros MP2/MP3 3231 K	OM 541.920	5410531230	9.0	15.03	61.0	F	G1
8012.600	IN-EX	Actros MP2/MP3 3231 K	OM 541.940	5410531230	9.0	15.03	61.0	F	G1
8012.600	IN-EX	Actros MP2/MP3 3232 B	OM 541.970	5410531230	9.0	15.03	61.0	F	G1
8012.600	IN-EX	Actros MP2/MP3 3236 B	OM 541.972	5410531230	9.0	15.03	61.0	F	G1
8012.600	IN-EX	Actros MP2/MP3 3236 K	OM 541.972	5410531230	9.0	15.03	61.0	F	G1
8012.600	IN-EX	Actros MP2/MP3 3241	OM 541.944	5410531230	9.0	15.03	61.0	F	G1
8012.600	IN-EX	Actros MP2/MP3 3241 B	OM 541.974	5410531230	9.0	15.03	61.0	F	G1
8012.600	IN-EX	Actros MP2/MP3 3241 K	OM 541.974	5410531230	9.0	15.03	61.0	F	G1
8012.600	IN-EX	Actros MP2/MP3 3244	OM 541.976	5410531230	9.0	15.03	61.0	F	G1
8012.600	IN-EX	Actros MP2/MP3 3244 B	OM 541.976	5410531230	9.0	15.03	61.0	F	G1
8012.600	IN-EX	Actros MP2/MP3 3244 K	OM 541.976	5410531230	9.0	15.03	61.0	F	G1
8012.600	IN-EX	Actros MP2/MP3 3246	OM 541.948	5410531230	9.0	15.03	61.0	F	G1
8012.600	IN-EX	Actros MP2/MP3 3246	OM 541.980	5410531230	9.0	15.03	61.0	F	G1
8012.600	IN-EX	Actros MP2/MP3 3246 B	OM 541.948	5410531230	9.0	15.03	61.0	F	G1
8012.600	IN-EX	Actros MP2/MP3 3246 B	OM 541.980	5410531230	9.0	15.03	61.0	F	G1
8012.600	IN-EX	Actros MP2/MP3 3246 K	OM 541.948	5410531230	9.0	15.03	61.0	F	G1
8012.600	IN-EX	Actros MP2/MP3 3248 B	OM 541.978	5410531230	9.0	15.03	61.0	F	G1
8012.600	IN-EX	Actros MP2/MP3 3331 A, 3332 A	OM 541.920	5410531230	9.0	15.03	61.0	F	G1
8012.600	IN-EX	Actros MP2/MP3 3331 A, 3332 A	OM 541.926	5410531230	9.0	15.03	61.0	F	G1
8012.600	IN-EX	Actros MP2/MP3 3331 A, 3332 A	OM 541.940	5410531230	9.0	15.03	61.0	F	G1
8012.600	IN-EX	Actros MP2/MP3 3331 A, 3332 A	OM 541.941	5410531230	9.0	15.03	61.0	F	G1
8012.600	IN-EX	Actros MP2/MP3 3331 S, 3332 S	OM 541.920	5410531230	9.0	15.03	61.0	F	G1

(D1) Internal diameter, (D2) External diameter, (B) Shape, (C) Material

VALVE GUIDES

MERCEDES BENZ

IVT Ref.	Type	Model	Engine	OEM Ref.	D1	D2	Length	B	C
8012.600	IN-EX	Actros MP2/MP3 3331 S, 3332 S	OM 541.940	5410531230	9.0	15.03	61.0	F	G1
8012.600	IN-EX	Actros MP2/MP3 3331 S, 3332 S	OM 541.970	5410531230	9.0	15.03	61.0	F	G1
8012.600	IN-EX	Actros MP2/MP3 3331, 3332	OM 541.920	5410531230	9.0	15.03	61.0	F	G1
8012.600	IN-EX	Actros MP2/MP3 3331, 3332	OM 541.940	5410531230	9.0	15.03	61.0	F	G1
8012.600	IN-EX	Actros MP2/MP3 3332 B	OM 541.970	5410531230	9.0	15.03	61.0	F	G1
8012.600	IN-EX	Actros MP2/MP3 3332 K	OM 541.940	5410531230	9.0	15.03	61.0	F	G1
8012.600	IN-EX	Actros MP2/MP3 3336	OM 541.942	5410531230	9.0	15.03	61.0	F	G1
8012.600	IN-EX	Actros MP2/MP3 3336	OM 541.972	5410531230	9.0	15.03	61.0	F	G1
8012.600	IN-EX	Actros MP2/MP3 3336 A	OM 541.942	5410531230	9.0	15.03	61.0	F	G1
8012.600	IN-EX	Actros MP2/MP3 3336 B	OM 541.972	5410531230	9.0	15.03	61.0	F	G1
8012.600	IN-EX	Actros MP2/MP3 3336 K	OM 541.942	5410531230	9.0	15.03	61.0	F	G1
8012.600	IN-EX	Actros MP2/MP3 3336 S	OM 541.942	5410531230	9.0	15.03	61.0	F	G1
8012.600	IN-EX	Actros MP2/MP3 3336 S	OM 541.972	5410531230	9.0	15.03	61.0	F	G1
8012.600	IN-EX	Actros MP2/MP3 3341	OM 541.944	5410531230	9.0	15.03	61.0	F	G1
8012.600	IN-EX	Actros MP2/MP3 3341 AS	OM 541.944	5410531230	9.0	15.03	61.0	F	G1
8012.600	IN-EX	Actros MP2/MP3 3341 AS	OM 541.945	5410531230	9.0	15.03	61.0	F	G1
8012.600	IN-EX	Actros MP2/MP3 3341 B	OM 541.944	5410531230	9.0	15.03	61.0	F	G1
8012.600	IN-EX	Actros MP2/MP3 3341 B	OM 541.974	5410531230	9.0	15.03	61.0	F	G1
8012.600	IN-EX	Actros MP2/MP3 3341 K	OM 541.974	5410531230	9.0	15.03	61.0	F	G1
8012.600	IN-EX	Actros MP2/MP3 3341 S	OM 541.944	5410531230	9.0	15.03	61.0	F	G1
8012.600	IN-EX	Actros MP2/MP3 3344	OM 541.946	5410531230	9.0	15.03	61.0	F	G1
8012.600	IN-EX	Actros MP2/MP3 3344 A	OM 541.946	5410531230	9.0	15.03	61.0	F	G1
8012.600	IN-EX	Actros MP2/MP3 3344 B	OM 541.976	5410531230	9.0	15.03	61.0	F	G1
8012.600	IN-EX	Actros MP2/MP3 3344 K	OM 541.976	5410531230	9.0	15.03	61.0	F	G1
8012.600	IN-EX	Actros MP2/MP3 3344 S	OM 541.946	5410531230	9.0	15.03	61.0	F	G1
8012.600	IN-EX	Actros MP2/MP3 3344 S	OM 541.976	5410531230	9.0	15.03	61.0	F	G1
8012.600	IN-EX	Actros MP2/MP3 3346 B	OM 541.980	5410531230	9.0	15.03	61.0	F	G1
8012.600	IN-EX	Actros MP2/MP3 3346 K	OM 541.980	5410531230	9.0	15.03	61.0	F	G1
8012.600	IN-EX	Actros MP2/MP3 3348	OM 541.978	5410531230	9.0	15.03	61.0	F	G1
8012.600	IN-EX	Actros MP2/MP3 3348	OM 542.921	5410531230	9.0	15.03	61.0	F	G1
8012.600	IN-EX	Actros MP2/MP3 3348 AK	OM 541.948	5410531230	9.0	15.03	61.0	F	G1
8012.600	IN-EX	Actros MP2/MP3 3348 AS	OM 541.948	5410531230	9.0	15.03	61.0	F	G1
8012.600	IN-EX	Actros MP2/MP3 3348 B	OM 541.948	5410531230	9.0	15.03	61.0	F	G1
8012.600	IN-EX	Actros MP2/MP3 3348 B	OM 541.978	5410531230	9.0	15.03	61.0	F	G1
8012.600	IN-EX	Actros MP2/MP3 3348 K	OM 541.978	5410531230	9.0	15.03	61.0	F	G1
8012.600	IN-EX	Actros MP2/MP3 3348 S	OM 541.948	5410531230	9.0	15.03	61.0	F	G1
8012.600	IN-EX	Actros MP2/MP3 3348 S	OM 542.921	5410531230	9.0	15.03	61.0	F	G1
8012.600	IN-EX	Actros MP2/MP3 3350	OM 542.940	5410531230	9.0	15.03	61.0	F	G1
8012.600	IN-EX	Actros MP2/MP3 3351 AK	OM 542.961	5410531230	9.0	15.03	61.0	F	G1
8012.600	IN-EX	Actros MP2/MP3 3351 AS	OM 542.961	5410531230	9.0	15.03	61.0	F	G1
8012.600	IN-EX	Actros MP2/MP3 3354	OM 542.942	5410531230	9.0	15.03	61.0	F	G1
8012.600	IN-EX	Actros MP2/MP3 3355 AS	OM 542.963	5410531230	9.0	15.03	61.0	F	G1
8012.600	IN-EX	Actros MP2/MP3 3355 S	OM 542.962	5410531230	9.0	15.03	61.0	F	G1
8012.600	IN-EX	Actros MP2/MP3 4140 AK	OM 541.923	5410531230	9.0	15.03	61.0	F	G1
8012.600	IN-EX	Actros MP2/MP3 4140 AK	OM 541.924	5410531230	9.0	15.03	61.0	F	G1
8012.600	IN-EX	Actros MP2/MP3 4140 AK	OM 541.945	5410531230	9.0	15.03	61.0	F	G1
8012.600	IN-EX	Actros MP2/MP3 4140 K	OM 541.923	5410531230	9.0	15.03	61.0	F	G1
8012.600	IN-EX	Actros MP2/MP3 4140 K	OM 541.924	5410531230	9.0	15.03	61.0	F	G1
8012.600	IN-EX	Actros MP2/MP3 4140 K	OM 541.945	5410531230	9.0	15.03	61.0	F	G1
8012.600	IN-EX	Actros MP2/MP3 4141 B	OM 541.974	5410531230	9.0	15.03	61.0	F	G1
8012.600	IN-EX	Actros MP2/MP3 4141 K	OM 541.974	5410531230	9.0	15.03	61.0	F	G1
8012.600	IN-EX	Actros MP2/MP3 4144 B	OM 541.946	5410531230	9.0	15.03	61.0	F	G1
8012.600	IN-EX	Actros MP2/MP3 4144 B	OM 541.976	5410531230	9.0	15.03	61.0	F	G1
8012.600	IN-EX	Actros MP2/MP3 4144 K	OM 541.946	5410531230	9.0	15.03	61.0	F	G1
8012.600	IN-EX	Actros MP2/MP3 4144 K	OM 541.976	5410531230	9.0	15.03	61.0	F	G1
8012.600	IN-EX	Actros MP2/MP3 4146 B	OM 541.980	5410531230	9.0	15.03	61.0	F	G1
8012.600	IN-EX	Actros MP2/MP3 4148 AK	OM 541.948	5410531230	9.0	15.03	61.0	F	G1
8012.600	IN-EX	Actros MP2/MP3 4148 B	OM 541.978	5410531230	9.0	15.03	61.0	F	G1
8012.600	IN-EX	Actros MP2/MP3 4148 K	OM 541.948	5410531230	9.0	15.03	61.0	F	G1
8012.600	IN-EX	Actros MP2/MP3 4151 K	OM 542.960	5410531230	9.0	15.03	61.0	F	G1
8012.600	IN-EX	Actros MP2/MP3 4151 K	OM 542.961	5410531230	9.0	15.03	61.0	F	G1
8012.600	IN-EX	Actros MP2/MP3 4160 S	OM 542.956	5410531230	9.0	15.03	61.0	F	G1

(D1) Internal diameter, (D2) External diameter, (B) Shape, (C) Material

VALVE GUIDES

MERCEDES BENZ

IVT Ref.	Type	Model	Engine	OEM Ref.	D1	D2	Length	B	C
8012.600	IN-EX	Actros MP2/MP3 4160 S	OM 542.957	5410531230	9.0	15.03	61.0	F	G1
8012.600	IN-EX	Axor 2 1835 LS	OM 457.937	5410531230	9.0	15.03	61.0	F	G1
8012.600	IN-EX	Axor 2 1840 LS	OM 457.937	5410531230	9.0	15.03	61.0	F	G1
8012.600	IN-EX	Axor 2 1840 LS,LLS	OM 457.937	5410531230	9.0	15.03	61.0	F	G1
8012.600	IN-EX	Axor 2 1840 LS,LLS	OM 457.948	5410531230	9.0	15.03	61.0	F	G1
8012.600	IN-EX	Axor 2 1840 LS,LLS	OM 457.955	5410531230	9.0	15.03	61.0	F	G1
8012.600	IN-EX	Axor 2 1843 LS	OM 457.937	5410531230	9.0	15.03	61.0	F	G1
8012.600	IN-EX	Axor 2 1843 LS,LLS	OM 457.937	5410531230	9.0	15.03	61.0	F	G1
8012.600	IN-EX	Axor 2 1843 LS,LLS	OM 457.948	5410531230	9.0	15.03	61.0	F	G1
8012.600	IN-EX	Axor 2 2436 LS	OM 457.948	5410531230	9.0	15.03	61.0	F	G1
8012.600	IN-EX	Axor 2 2440 LS	OM 457.948	5410531230	9.0	15.03	61.0	F	G1
8012.600	IN-EX	Axor 2 2443 LS	OM 457.948	5410531230	9.0	15.03	61.0	F	G1
8012.600	IN-EX	Axor 2 2535 L	OM 457.937	5410531230	9.0	15.03	61.0	F	G1
8012.600	IN-EX	Axor 2 2535 L	OM 457.948	5410531230	9.0	15.03	61.0	F	G1
8012.600	IN-EX	Axor 2 2535 LS	OM 457.937	5410531230	9.0	15.03	61.0	F	G1
8012.600	IN-EX	Axor 2 2535 LS	OM 457.948	5410531230	9.0	15.03	61.0	F	G1
8012.600	IN-EX	Axor 2 2540 L,LL	OM 457.937	5410531230	9.0	15.03	61.0	F	G1
8012.600	IN-EX	Axor 2 2540 L,LL	OM 457.948	5410531230	9.0	15.03	61.0	F	G1
8012.600	IN-EX	Axor 2 2540 LS	OM 457.937	5410531230	9.0	15.03	61.0	F	G1
8012.600	IN-EX	Axor 2 2540 LS	OM 457.948	5410531230	9.0	15.03	61.0	F	G1
8012.600	IN-EX	Axor 2 2543 L,LL	OM 457.937	5410531230	9.0	15.03	61.0	F	G1
8012.600	IN-EX	Axor 2 2543 L,LL	OM 457.948	5410531230	9.0	15.03	61.0	F	G1
8012.600	IN-EX	Axor 2 2543 LS	OM 457.937	5410531230	9.0	15.03	61.0	F	G1
8012.600	IN-EX	Axor 2 2543 LS	OM 457.948	5410531230	9.0	15.03	61.0	F	G1
8012.600	IN-EX	Axor 2 2640 B	OM 457.957	5410531230	9.0	15.03	61.0	F	G1
8012.600	IN-EX	Axor 2 2640 K	OM 457.957	5410531230	9.0	15.03	61.0	F	G1
8012.600	IN-EX	Axor 2 2643 B	OM 457.957	5410531230	9.0	15.03	61.0	F	G1
8012.600	IN-EX	Axor 2 2643 K	OM 457.957	5410531230	9.0	15.03	61.0	F	G1
8012.600	IN-EX	Axor 2 3240	OM 457.937	5410531230	9.0	15.03	61.0	F	G1
8012.600	IN-EX	Axor 2 3240	OM 457.948	5410531230	9.0	15.03	61.0	F	G1
8012.600	IN-EX	Axor 2 3240 B	OM 457.957	5410531230	9.0	15.03	61.0	F	G1
8012.600	IN-EX	Axor 2 3240 K	OM 457.957	5410531230	9.0	15.03	61.0	F	G1
8012.600	IN-EX	Axor 2 3243	OM 457.937	5410531230	9.0	15.03	61.0	F	G1
8012.600	IN-EX	Axor 2 3243	OM 457.948	5410531230	9.0	15.03	61.0	F	G1
8012.600	IN-EX	Axor 2 3243 B	OM 457.956	5410531230	9.0	15.03	61.0	F	G1
8012.600	IN-EX	Axor 2 3243 B	OM 457.957	5410531230	9.0	15.03	61.0	F	G1
8012.600	IN-EX	Axor 2 3243 K	OM 457.956	5410531230	9.0	15.03	61.0	F	G1
8012.600	IN-EX	Axor 2 3243 K	OM 457.957	5410531230	9.0	15.03	61.0	F	G1
8012.600	IN-EX	Axor 2 3335	OM 457.937	5410531230	9.0	15.03	61.0	F	G1
8012.600	IN-EX	Axor 2 3340	OM 457.917	5410531230	9.0	15.03	61.0	F	G1
8012.600	IN-EX	Axor 2 3340	OM 457.918	5410531230	9.0	15.03	61.0	F	G1
8012.600	IN-EX	Axor 2 3340	OM 457.937	5410531230	9.0	15.03	61.0	F	G1
8012.600	IN-EX	Axor 2 3340 K	OM 457.917	5410531230	9.0	15.03	61.0	F	G1
8012.600	IN-EX	Axor 2 3340 K	OM 457.918	5410531230	9.0	15.03	61.0	F	G1
8012.600	IN-EX	Axor 2 3340 K	OM 457.937	5410531230	9.0	15.03	61.0	F	G1
8012.600	IN-EX	Axor 2 3340 K	OM 457.956	5410531230	9.0	15.03	61.0	F	G1
8012.600	IN-EX	Axor 2 3340 K	OM 457.957	5410531230	9.0	15.03	61.0	F	G1
8012.600	IN-EX	Axor 2 3343	OM 457.937	5410531230	9.0	15.03	61.0	F	G1
8012.600	IN-EX	Axor 2 3343 B	OM 457.956	5410531230	9.0	15.03	61.0	F	G1
8012.600	IN-EX	Axor 2 3343 B	OM 457.957	5410531230	9.0	15.03	61.0	F	G1
8066.600	EX	C 220 D	OM 601.913	6010500924	9.0	14.03	37.5	F-1	G
8066.600	EX	C 220 D	OM 601.913	6010501124	9.0	14.03	37.5	F-1	G
8012.600	IN-EX	Citaro N	OM 457.942	5410531230	9.0	15.03	61.0	F	G1
8012.600	IN-EX	Citaro N,MUE	OM 457.934	5410531230	9.0	15.03	61.0	F	G1
8012.600	IN-EX	Citaro N,MUE	OM 457.942	5410531230	9.0	15.03	61.0	F	G1
8012.600	IN-EX	Citaro N,MUE	OM 457.950	5410531230	9.0	15.03	61.0	F	G1
8012.600	IN-EX	Citaro N,MUE	OM 457.959	5410531230	9.0	15.03	61.0	F	G1
8185.600	IN-EX	CLASSE A (W168), A 140 (168.03	M 166.940	1110531029	7.0	12.56	37.5	F	G1
8185.600	IN-EX	CLASSE A (W168), A 140 (168.03	M 166.940	6060530230	7.0	12.56	37.5	F	G1
8184.600	IN	CLASSE A (W168), A 140 (168.03	M 166.940	6060531229	6.0	12.56	37.5	F	G1
8185.600	IN-EX	CLASSE A (W168), A 140 (168.03	M 166.960	1110531029	7.0	12.56	37.5	F	G1
8185.600	IN-EX	CLASSE A (W168), A 140 (168.03	M 166.960	6060530230	7.0	12.56	37.5	F	G1

(D1) Internal diameter, (D2) External diameter, (B) Shape, (C) Material

VALVE GUIDES

MERCEDES BENZ

IVT Ref.	Type	Model	Engine	OEM Ref.	D1	D2	Length	B	C
8184.600	IN	CLASSE A (W168), A 140 (168.03	M 166.960	6060531229	6.0	12.56	37.5	F	G1
8185.600	IN-EX	CLASSE A (W168), A 160 (168.03	M 166.960	1110531029	7.0	12.56	37.5	F	G1
8185.600	IN-EX	CLASSE A (W168), A 160 (168.03	M 166.960	6060530230	7.0	12.56	37.5	F	G1
8184.600	IN	CLASSE A (W168), A 160 (168.03	M 166.960	6060531229	6.0	12.56	37.5	F	G1
8185.600	IN-EX	CLASSE A (W168), A 190 (168.03	M 166.990	1110531029	7.0	12.56	37.5	F	G1
8185.600	IN-EX	CLASSE A (W168), A 190 (168.03	M 166.990	6060530230	7.0	12.56	37.5	F	G1
8184.600	IN	CLASSE A (W168), A 190 (168.03	M 166.990	6060531229	6.0	12.56	37.5	F	G1
8185.600	IN-EX	CLASSE A (W168), A 210 (168.03	M 166.995	1110531029	7.0	12.56	37.5	F	G1
8185.600	IN-EX	CLASSE A (W168), A 210 (168.03	M 166.995	6060530230	7.0	12.56	37.5	F	G1
8184.600	IN	CLASSE A (W168), A 210 (168.03	M 166.995	6060531229	6.0	12.56	37.5	F	G1
8185.600	IN-EX	CLASSE A (W169), A 150 (169.03	M 266.920	1110531029	7.0	12.56	37.5	F	G1
8185.600	IN-EX	CLASSE A (W169), A 150 (169.03	M 266.920	6060530230	7.0	12.56	37.5	F	G1
8184.600	IN	CLASSE A (W169), A 150 (169.03	M 266.920	6060531229	6.0	12.56	37.5	F	G1
8185.600	IN-EX	CLASSE A (W169), A 170 (169.03	M 266.940	1110531029	7.0	12.56	37.5	F	G1
8185.600	IN-EX	CLASSE A (W169), A 170 (169.03	M 266.940	6060530230	7.0	12.56	37.5	F	G1
8184.600	IN	CLASSE A (W169), A 170 (169.03	M 266.940	6060531229	6.0	12.56	37.5	F	G1
8185.600	IN-EX	CLASSE A (W169), A 200 (169.03	M 266.960	1110531029	7.0	12.56	37.5	F	G1
8185.600	IN-EX	CLASSE A (W169), A 200 (169.03	M 266.960	6060530230	7.0	12.56	37.5	F	G1
8184.600	IN	CLASSE A (W169), A 200 (169.03	M 266.960	6060531229	6.0	12.56	37.5	F	G1
8185.600	IN-EX	CLASSE A (W169), A 200 TURB	M 266.980	1110531029	7.0	12.56	37.5	F	G1
8185.600	IN-EX	CLASSE A (W169), A 200 TURB	M 266.980	6060530230	7.0	12.56	37.5	F	G1
8184.600	IN	CLASSE A (W169), A 200 TURB	M 266.980	6060531229	6.0	12.56	37.5	F	G1
8185.600	IN-EX	CLASSE B (W245), B 150 (245.23	M 266.920	1110531029	7.0	12.56	37.5	F	G1
8185.600	IN-EX	CLASSE B (W245), B 150 (245.23	M 266.920	6060530230	7.0	12.56	37.5	F	G1
8184.600	IN	CLASSE B (W245), B 150 (245.23	M 266.920	6060531229	6.0	12.56	37.5	F	G1
8185.600	IN-EX	CLASSE B (W245), B 170 (245.23	M 266.940	1110531029	7.0	12.56	37.5	F	G1
8185.600	IN-EX	CLASSE B (W245), B 170 (245.23	M 266.940	6060530230	7.0	12.56	37.5	F	G1
8184.600	IN	CLASSE B (W245), B 170 (245.23	M 266.940	6060531229	6.0	12.56	37.5	F	G1
8185.600	IN-EX	CLASSE B (W245), B 170 NGT (2	M 266.960	1110531029	7.0	12.56	37.5	F	G1
8185.600	IN-EX	CLASSE B (W245), B 170 NGT (2	M 266.960	6060530230	7.0	12.56	37.5	F	G1
8184.600	IN	CLASSE B (W245), B 170 NGT (2	M 266.960	6060531229	6.0	12.56	37.5	F	G1
8185.600	IN-EX	CLASSE B (W245), B 200 (245.23	M 266.960	1110531029	7.0	12.56	37.5	F	G1
8185.600	IN-EX	CLASSE B (W245), B 200 (245.23	M 266.960	6060530230	7.0	12.56	37.5	F	G1
8184.600	IN	CLASSE B (W245), B 200 (245.23	M 266.960	6060531229	6.0	12.56	37.5	F	G1
8185.600	IN-EX	CLASSE B (W245), B 200 TURB	M 266.980	1110531029	7.0	12.56	37.5	F	G1
8185.600	IN-EX	CLASSE B (W245), B 200 TURB	M 266.980	6060530230	7.0	12.56	37.5	F	G1
8184.600	IN	CLASSE B (W245), B 200 TURB	M 266.980	6060531229	6.0	12.56	37.5	F	G1
8185.600	IN-EX	CLASSE C (W202), C 180 (202.01	M 111.921	1110531029	7.0	12.56	37.5	F	G1
8185.600	IN-EX	CLASSE C (W202), C 180 (202.01	M 111.921	6060530230	7.0	12.56	37.5	F	G1
8185.600	IN-EX	CLASSE C (W202), C 180 (202.01	M 111.921/M 111.920	1110531029	7.0	12.56	37.5	F	G1
8185.600	IN-EX	CLASSE C (W202), C 180 (202.01	M 111.921/M 111.920	6060530230	7.0	12.56	37.5	F	G1
8185.600	IN-EX	CLASSE C (W202), C 200 (202.02	M 111.945/M 111.941	1110531029	7.0	12.56	37.5	F	G1
8185.600	IN-EX	CLASSE C (W202), C 200 (202.02	M 111.945/M 111.941	6060530230	7.0	12.56	37.5	F	G1
8161.604	IN-EX	CLASSE C (W202), C 200 CDI (2	OM 611.960	05080044AB	7.0	12.56	37.5	F	S03
8168.600	IN	CLASSE C (W202), C 200 D (202.	OM 601.913	6010500624	8.0	14.03	39.5	F-1	G
8168.600	IN	CLASSE C (W202), C 200 D (202.	OM 601.913	6010500824	8.0	14.03	39.5	F-1	G
8185.600	IN-EX	CLASSE C (W202), C 200 D (202.	OM 604.915	1110531029	7.0	12.56	37.5	F	G1
8185.600	IN-EX	CLASSE C (W202), C 200 D (202.	OM 604.915	6060530230	7.0	12.56	37.5	F	G1
8184.600	IN	CLASSE C (W202), C 200 D (202.	OM 604.915	6060531229	6.0	12.56	37.5	F	G1
8185.600	IN-EX	CLASSE C (W202), C 200 Kompr	M 111.944	1110531029	7.0	12.56	37.5	F	G1
8185.600	IN-EX	CLASSE C (W202), C 200 Kompr	M 111.944	1110531029	7.0	12.56	37.5	F	G1
8185.600	IN-EX	CLASSE C (W202), C 200 Kompr	M 111.944	6060530230	7.0	12.56	37.5	F	G1
8185.600	IN-EX	CLASSE C (W202), C 200 Kompr	M 111.944	6060530230	7.0	12.56	37.5	F	G1
8185.600	IN-EX	CLASSE C (W202), C 220 (202.02	M 111.961	1110531029	7.0	12.56	37.5	F	G1
8185.600	IN-EX	CLASSE C (W202), C 220 (202.02	M 111.961	6060530230	7.0	12.56	37.5	F	G1
8161.604	IN-EX	CLASSE C (W202), C 220 CDI (2	OM 611.960	05080044AB	7.0	12.56	37.5	F	S03
8184.600	IN	CLASSE C (W202), C 220 D	OM 604.910	6060531229	6.0	12.56	37.5	F	G1
8184.600	IN	CLASSE C (W202), C 220 D (202.	OM 604.910	6060531229	6.0	12.56	37.5	F	G1
8185.600	IN-EX	CLASSE C (W202), C 230 (202.02	M 111.974	1110531029	7.0	12.56	37.5	F	G1
8185.600	IN-EX	CLASSE C (W202), C 230 (202.02	M 111.974	6060530230	7.0	12.56	37.5	F	G1
8185.600	IN-EX	CLASSE C (W202), C 230 Kompr	M 111.975	1110531029	7.0	12.56	37.5	F	G1
8185.600	IN-EX	CLASSE C (W202), C 230 Kompr	M 111.975	6060530230	7.0	12.56	37.5	F	G1

(D1) Internal diameter, (D2) External diameter, (B) Shape, (C) Material

VALVE GUIDES

MERCEDES BENZ

IVT Ref.	Type	Model	Engine	OEM Ref.	D1	D2	Length	B	C
8185.600	IN-EX	CLASSE C (W202), C 250 D (202.	OM 605.910	1110531029	7.0	12.56	37.5	F	G1
8185.600	IN-EX	CLASSE C (W202), C 250 D (202.	OM 605.910	6060530230	7.0	12.56	37.5	F	G1
8184.600	IN	CLASSE C (W202), C 250 D (202.	OM 605.910	6060531229	6.0	12.56	37.5	F	G1
8185.600	IN-EX	CLASSE C (W202), C 250 Turbo-	OM 605.960	1110531029	7.0	12.56	37.5	F	G1
8185.600	IN-EX	CLASSE C (W202), C 250 Turbo-	OM 605.960	6060530230	7.0	12.56	37.5	F	G1
8184.600	IN	CLASSE C (W202), C 250 Turbo-	OM 605.960	6060531229	6.0	12.56	37.5	F	G1
8185.600	IN-EX	CLASSE C (W202), C 280 (202.02	M 104.941	1110531029	7.0	12.56	37.5	F	G1
8185.600	IN-EX	CLASSE C (W202), C 280 (202.02	M 104.941	6060530230	7.0	12.56	37.5	F	G1
8185.600	IN-EX	CLASSE C (W202), C 36 AMG (2	M 104.941 (AMG 3.6)	1110531029	7.0	12.56	37.5	F	G1
8185.600	IN-EX	CLASSE C (W202), C 36 AMG (2	M 104.941 (AMG 3.6)	6060530230	7.0	12.56	37.5	F	G1
8161.604	IN-EX	CLASSE C (W203), C 200 CDI	OM 646.962	05080044AB	7.0	12.56	37.5	F	S03
8161.604	IN-EX	CLASSE C (W203), C 200 CDI (2	OM 611.962	05080044AB	7.0	12.56	37.5	F	S03
8161.604	IN-EX	CLASSE C (W203), C 200 CDI (2	OM 646.962	05080044AB	7.0	12.56	37.5	F	S03
8185.600	IN-EX	CLASSE C (W203), C 200 Kompr	M 111.955	1110531029	7.0	12.56	37.5	F	G1
8185.600	IN-EX	CLASSE C (W203), C 200 Kompr	M 111.955	6060530230	7.0	12.56	37.5	F	G1
8161.604	IN-EX	CLASSE C (W203), C 220 CDI (2	OM 611.962	05080044AB	7.0	12.56	37.5	F	S03
8161.604	IN-EX	CLASSE C (W203), C 220 CDI (2	OM 646.963	05080044AB	7.0	12.56	37.5	F	S03
8161.604	IN-EX	CLASSE C (W203), C 270 CDI (2	OM 612.962	05080044AB	7.0	12.56	37.5	F	S03
8161.604	IN-EX	CLASSE C (W203), C 30 CDI AM	OM 612.990	05080044AB	7.0	12.56	37.5	F	S03
8161.604	IN-EX	CLASSE C Coupe Sportivo (CL20	OM 646.962	05080044AB	7.0	12.56	37.5	F	S03
8185.600	IN-EX	CLASSE C Coupe Sportivo (CL20	M 111.955	1110531029	7.0	12.56	37.5	F	G1
8185.600	IN-EX	CLASSE C Coupe Sportivo (CL20	M 111.955	6060530230	7.0	12.56	37.5	F	G1
8161.604	IN-EX	CLASSE C Coupe Sportivo (CL20	OM 611.962	05080044AB	7.0	12.56	37.5	F	S03
8161.604	IN-EX	CLASSE C Coupe Sportivo (CL20	OM 646.963	05080044AB	7.0	12.56	37.5	F	S03
8185.600	IN-EX	CLASSE C Coupe Sportivo (CL20	M 111.981	1110531029	7.0	12.56	37.5	F	G1
8185.600	IN-EX	CLASSE C Coupe Sportivo (CL20	M 111.981	6060530230	7.0	12.56	37.5	F	G1
8161.604	IN-EX	CLASSE C Coupe Sportivo (CL20	OM 612.990	05080044AB	7.0	12.56	37.5	F	S03
8185.600	IN-EX	CLASSE C Station wagon (S202),	M 111.921/M 111.920	1110531029	7.0	12.56	37.5	F	G1
8185.600	IN-EX	CLASSE C Station wagon (S202),	M 111.921/M 111.920	6060530230	7.0	12.56	37.5	F	G1
8185.600	IN-EX	CLASSE C Station wagon (S202),	M 111.945/M 111.941	1110531029	7.0	12.56	37.5	F	G1
8185.600	IN-EX	CLASSE C Station wagon (S202),	M 111.945/M 111.941	6060530230	7.0	12.56	37.5	F	G1
8161.604	IN-EX	CLASSE C Station wagon (S202),	OM 611.960	05080044AB	7.0	12.56	37.5	F	S03
8185.600	IN-EX	CLASSE C Station wagon (S202),	OM 604.915	1110531029	7.0	12.56	37.5	F	G1
8185.600	IN-EX	CLASSE C Station wagon (S202),	OM 604.915	6060530230	7.0	12.56	37.5	F	G1
8184.600	IN	CLASSE C Station wagon (S202),	OM 604.915	6060531229	6.0	12.56	37.5	F	G1
8185.600	IN-EX	CLASSE C Station wagon (S202),	M 111.956	1110531029	7.0	12.56	37.5	F	G1
8185.600	IN-EX	CLASSE C Station wagon (S202),	M 111.956	6060530230	7.0	12.56	37.5	F	G1
8185.600	IN-EX	CLASSE C Station wagon (S202),	M 111.944	1110531029	7.0	12.56	37.5	F	G1
8185.600	IN-EX	CLASSE C Station wagon (S202),	M 111.944	6060530230	7.0	12.56	37.5	F	G1
8161.604	IN-EX	CLASSE C Station wagon (S202),	OM 611.960	05080044AB	7.0	12.56	37.5	F	S03
8184.600	IN	CLASSE C Station wagon (S202),	OM 604.910	6060531229	6.0	12.56	37.5	F	G1
8184.600	IN	CLASSE C Station wagon (S202),	OM 604.910	6060531229	6.0	12.56	37.5	F	G1
8185.600	IN-EX	CLASSE C Station wagon (S202),	M 111.974	1110531029	7.0	12.56	37.5	F	G1
8185.600	IN-EX	CLASSE C Station wagon (S202),	M 111.974	6060530230	7.0	12.56	37.5	F	G1
8185.600	IN-EX	CLASSE C Station wagon (S202),	OM 605.960	1110531029	7.0	12.56	37.5	F	G1
8185.600	IN-EX	CLASSE C Station wagon (S202),	OM 605.960	6060530230	7.0	12.56	37.5	F	G1
8184.600	IN	CLASSE C Station wagon (S202),	OM 605.960	6060531229	6.0	12.56	37.5	F	G1
8161.604	IN-EX	CLASSE C Station wagon (S203),	OM 611.962	05080044AB	7.0	12.56	37.5	F	S03
8161.604	IN-EX	CLASSE C Station wagon (S203),	OM 611.962/OM 646.962	05080044AB	7.0	12.56	37.5	F	S03
8161.604	IN-EX	CLASSE C Station wagon (S203),	OM 646.962	05080044AB	7.0	12.56	37.5	F	S03
8185.600	IN-EX	CLASSE C Station wagon (S203),	M 111.955	1110531029	7.0	12.56	37.5	F	G1
8185.600	IN-EX	CLASSE C Station wagon (S203),	M 111.955	6060530230	7.0	12.56	37.5	F	G1
8161.604	IN-EX	CLASSE C Station wagon (S203),	OM 611.962	05080044AB	7.0	12.56	37.5	F	S03
8161.604	IN-EX	CLASSE C Station wagon (S203),	OM 646.963	05080044AB	7.0	12.56	37.5	F	S03
8161.604	IN-EX	CLASSE C Station wagon (S203),	M 112.912	05080044AB	7.0	12.56	37.5	F	S03
8161.604	IN-EX	CLASSE C Station wagon (S203),	OM 612.962	05080044AB	7.0	12.56	37.5	F	S03
8161.604	IN-EX	CLASSE C Station wagon (S203),	OM 612.990	05080044AB	7.0	12.56	37.5	F	S03
8185.600	IN-EX	CLASSE E (W124), E 200 (124.01	M 111.940	1110531029	7.0	12.56	37.5	F	G1
8185.600	IN-EX	CLASSE E (W124), E 200 (124.01	M 111.940	6060530230	7.0	12.56	37.5	F	G1
8168.600	IN	CLASSE E (W124), E 200 D (124.	OM 601.912	6010500624	8.0	14.03	39.5	F-1	G
8168.600	IN	CLASSE E (W124), E 200 D (124.	OM 601.912	6010500824	8.0	14.03	39.5	F-1	G
8185.600	IN-EX	CLASSE E (W124), E 220 (124.02	M 111.960	1110531029	7.0	12.56	37.5	F	G1

(D1) Internal diameter, (D2) External diameter, (B) Shape, (C) Material

VALVE GUIDES

MERCEDES BENZ

IVT Ref.	Type	Model	Engine	OEM Ref.	D1	D2	Length	B	C
8185.600	IN-EX	CLASSE E (W124), E 220 (124.02	M 111.960	6060530230	7.0	12.56	37.5	F	G1
8185.600	IN-EX	CLASSE E (W124), E 250 D (124.	OM 605.911	1110531029	7.0	12.56	37.5	F	G1
8185.600	IN-EX	CLASSE E (W124), E 250 D (124.	OM 605.911	6060530230	7.0	12.56	37.5	F	G1
8184.600	IN	CLASSE E (W124), E 250 D (124.	OM 605.911	6060531229	6.0	12.56	37.5	F	G1
8168.600	IN	CLASSE E (W124), E 250 Turbo-	OM 602.962	6010500624	8.0	14.03	39.5	F-1	G
8168.600	IN	CLASSE E (W124), E 250 Turbo-	OM 602.962	6010500824	8.0	14.03	39.5	F-1	G
8185.600	IN-EX	CLASSE E (W124), E 280 (124.02	M 104.942	1110531029	7.0	12.56	37.5	F	G1
8185.600	IN-EX	CLASSE E (W124), E 280 (124.02	M 104.942	6060530230	7.0	12.56	37.5	F	G1
8185.600	IN-EX	CLASSE E (W124), E 280 (124.02	M 104.942	1110531029	7.0	12.56	37.5	F	G1
8185.600	IN-EX	CLASSE E (W124), E 280 (124.02	M 104.942	6060530230	7.0	12.56	37.5	F	G1
8184.600	IN	CLASSE E (W124), E 300 D (124.	OM 606.910	6060531229	6.0	12.56	37.5	F	G1
8168.600	IN	CLASSE E (W124), E 300 Turbo-	OM 603.960	6010500624	8.0	14.03	39.5	F-1	G
8168.600	IN	CLASSE E (W124), E 300 Turbo-	OM 603.960	6010500824	8.0	14.03	39.5	F-1	G
8168.600	IN	CLASSE E (W124), E 300 Turbo-	OM 603.963	6010500624	8.0	14.03	39.5	F-1	G
8168.600	IN	CLASSE E (W124), E 300 Turbo-	OM 603.963	6010500824	8.0	14.03	39.5	F-1	G
8185.600	IN-EX	CLASSE E (W124), E 320 (124.03	M 104.992	1110531029	7.0	12.56	37.5	F	G1
8185.600	IN-EX	CLASSE E (W124), E 320 (124.03	M 104.992	6060530230	7.0	12.56	37.5	F	G1
8185.600	IN-EX	CLASSE E (W124), E 60 AMG (12	M 119.974 AMG	1110531029	7.0	12.56	37.5	F	G1
8185.600	IN-EX	CLASSE E (W124), E 60 AMG (12	M 119.974 AMG	6060530230	7.0	12.56	37.5	F	G1
8185.600	IN-EX	CLASSE E (W210), E 200 (210.03	M 111.942	1110531029	7.0	12.56	37.5	F	G1
8185.600	IN-EX	CLASSE E (W210), E 200 (210.03	M 111.942	6060530230	7.0	12.56	37.5	F	G1
8161.604	IN-EX	CLASSE E (W210), E 200 CDI (21	OM 611.961	05080044AB	7.0	12.56	37.5	F	S03
8161.604	IN-EX	CLASSE E (W210), E 200 CDI (21	OM 611.961	05080044AB	7.0	12.56	37.5	F	S03
8185.600	IN-EX	CLASSE E (W210), E 200 D (210.	OM 604.917	1110531029	7.0	12.56	37.5	F	G1
8185.600	IN-EX	CLASSE E (W210), E 200 D (210.	OM 604.917	6060530230	7.0	12.56	37.5	F	G1
8184.600	IN	CLASSE E (W210), E 200 D (210.	OM 604.917	6060531229	6.0	12.56	37.5	F	G1
8185.600	IN-EX	CLASSE E (W210), E 200 Kompr	M 111.947	1110531029	7.0	12.56	37.5	F	G1
8185.600	IN-EX	CLASSE E (W210), E 200 Kompr	M 111.947	6060530230	7.0	12.56	37.5	F	G1
8185.600	IN-EX	CLASSE E (W210), E 200 Kompr	M 111.957	1110531029	7.0	12.56	37.5	F	G1
8185.600	IN-EX	CLASSE E (W210), E 200 Kompr	M 111.957	6060530230	7.0	12.56	37.5	F	G1
8161.604	IN-EX	CLASSE E (W210), E 220 CDI (21	OM 611.961	05080044AB	7.0	12.56	37.5	F	S03
8161.604	IN-EX	CLASSE E (W210), E 220 CDI (21	OM 611.961	05080044AB	7.0	12.56	37.5	F	S03
8184.600	IN	CLASSE E (W210), E 220 D	OM 604.912	6060531229	6.0	12.56	37.5	F	G1
8184.600	IN	CLASSE E (W210), E 220 D (210.	OM 604.912	6060531229	6.0	12.56	37.5	F	G1
8185.600	IN-EX	CLASSE E (W210), E 230 (210.03	M 111.970	1110531029	7.0	12.56	37.5	F	G1
8185.600	IN-EX	CLASSE E (W210), E 230 (210.03	M 111.970	6060530230	7.0	12.56	37.5	F	G1
8161.604	IN-EX	CLASSE E (W210), E 240 (210.06	M 112.914	05080044AB	7.0	12.56	37.5	F	S03
8185.600	IN-EX	CLASSE E (W210), E 250 D (210.	OM 605.912	1110531029	7.0	12.56	37.5	F	G1
8185.600	IN-EX	CLASSE E (W210), E 250 D (210.	OM 605.912	6060530230	7.0	12.56	37.5	F	G1
8184.600	IN	CLASSE E (W210), E 250 D (210.	OM 605.912	6060531229	6.0	12.56	37.5	F	G1
8185.600	IN-EX	CLASSE E (W210), E 250 Turbo-	OM 605.962	1110531029	7.0	12.56	37.5	F	G1
8185.600	IN-EX	CLASSE E (W210), E 250 Turbo-	OM 605.962	6060530230	7.0	12.56	37.5	F	G1
8184.600	IN	CLASSE E (W210), E 250 Turbo-	OM 605.962	6060531229	6.0	12.56	37.5	F	G1
8161.604	IN-EX	CLASSE E (W210), E 270 CDI (21	OM 612.961	05080044AB	7.0	12.56	37.5	F	S03
8185.600	IN-EX	CLASSE E (W210), E 280 (210.05	M 104.945	1110531029	7.0	12.56	37.5	F	G1
8185.600	IN-EX	CLASSE E (W210), E 280 (210.05	M 104.945	6060530230	7.0	12.56	37.5	F	G1
8161.604	IN-EX	CLASSE E (W210), E 280 (210.06	M 112.921	05080044AB	7.0	12.56	37.5	F	S03
8161.604	IN-EX	CLASSE E (W210), E 280 4-matic	M 112.921	05080044AB	7.0	12.56	37.5	F	S03
8168.600	IN	CLASSE E (W210), E 290 Turbo-	OM 602.982	6010500624	8.0	14.03	39.5	F-1	G
8168.600	IN	CLASSE E (W210), E 290 Turbo-	OM 602.982	6010500824	8.0	14.03	39.5	F-1	G
8184.600	IN	CLASSE E (W210), E 300 D (210.	OM 606.912	6060531229	6.0	12.56	37.5	F	G1
8185.600	IN-EX	CLASSE E (W210), E 300 Turbo-	OM 606.962	1110531029	7.0	12.56	37.5	F	G1
8185.600	IN-EX	CLASSE E (W210), E 300 Turbo-	OM 606.962	6060530230	7.0	12.56	37.5	F	G1
8184.600	IN	CLASSE E (W210), E 300 Turbo-	OM 606.962	6060531229	6.0	12.56	37.5	F	G1
8185.600	IN-EX	CLASSE E (W210), E 320 (210.05	M 104.995	1110531029	7.0	12.56	37.5	F	G1
8185.600	IN-EX	CLASSE E (W210), E 320 (210.05	M 104.995	6060530230	7.0	12.56	37.5	F	G1
8161.604	IN-EX	CLASSE E (W210), E 320 CDI (21	OM 613.961	05080044AB	7.0	12.56	37.5	F	S03
8161.604	IN-EX	CLASSE E (W211), E 200 CDI (21	OM 646.951	05080044AB	7.0	12.56	37.5	F	S03
8161.604	IN-EX	CLASSE E (W211), E 200 CDI (21	OM 646.951	05080044AB	7.0	12.56	37.5	F	S03
8161.604	IN-EX	CLASSE E (W211), E 200 CDI (21	OM 646.820	05080044AB	7.0	12.56	37.5	F	S03
8161.604	IN-EX	CLASSE E (W211), E 220 CDI	OM 646.821	05080044AB	7.0	12.56	37.5	F	S03
8161.604	IN-EX	CLASSE E (W211), E 220 CDI (21	OM 646.961	05080044AB	7.0	12.56	37.5	F	S03

(D1) Internal diameter, (D2) External diameter, (B) Shape, (C) Material

VALVE GUIDES

MERCEDES BENZ

IVT Ref.	Type	Model	Engine	OEM Ref.	D1	D2	Length	B	C
8161.604	IN-EX	CLASSE E (W211), E 220 CDI (21	OM 646.821	05080044AB	7.0	12.56	37.5	F	S03
8161.604	IN-EX	CLASSE E (W211), E 240 (211.06	M 112.917/M 112.913	05080044AB	7.0	12.56	37.5	F	S03
8161.604	IN-EX	CLASSE E (W211), E 240 4-matic	M 112.917	05080044AB	7.0	12.56	37.5	F	S03
8161.604	IN-EX	CLASSE E (W211), E 270 CDI (21	OM 647.961	05080044AB	7.0	12.56	37.5	F	S03
8161.604	IN-EX	CLASSE E (W211), E 280 4-matic	M 272.943	05080044AB	7.0	12.56	37.5	F	S03
8161.604	IN-EX	CLASSE E (W211), E 280 CDI (21	OM 648.961	05080044AB	7.0	12.56	37.5	F	S03
8161.604	IN-EX	CLASSE E (W211), E 320 4-matic	M 112.954	05080044AB	7.0	12.56	37.5	F	S03
8161.604	IN-EX	CLASSE E (W211), E 320 CDI (21	OM 648.961	05080044AB	7.0	12.56	37.5	F	S03
8161.604	IN-EX	CLASSE E (W211), E 400 CDI (21	OM 628.961	05080044AB	7.0	12.56	37.5	F	S03
8185.600	IN-EX	CLASSE E Cabriolet (A124), E 20	M 111.940	1110531029	7.0	12.56	37.5	F	G1
8185.600	IN-EX	CLASSE E Cabriolet (A124), E 20	M 111.940	6060530230	7.0	12.56	37.5	F	G1
8185.600	IN-EX	CLASSE E Cabriolet (A124), E 22	M 111.960	1110531029	7.0	12.56	37.5	F	G1
8185.600	IN-EX	CLASSE E Cabriolet (A124), E 22	M 111.960	6060530230	7.0	12.56	37.5	F	G1
8185.600	IN-EX	CLASSE E Cabriolet (A124), E 32	M 104.992/M 104.995	1110531029	7.0	12.56	37.5	F	G1
8185.600	IN-EX	CLASSE E Cabriolet (A124), E 32	M 104.992/M 104.995	6060530230	7.0	12.56	37.5	F	G1
8185.600	IN-EX	CLASSE E Coupé (C124), E 200 (	M 111.940	1110531029	7.0	12.56	37.5	F	G1
8185.600	IN-EX	CLASSE E Coupé (C124), E 200 (	M 111.940	6060530230	7.0	12.56	37.5	F	G1
8185.600	IN-EX	CLASSE E Coupé (C124), E 220 (	M 111.960	1110531029	7.0	12.56	37.5	F	G1
8185.600	IN-EX	CLASSE E Coupé (C124), E 220 (	M 111.960	6060530230	7.0	12.56	37.5	F	G1
8185.600	IN-EX	CLASSE E Coupé (C124), E 320 (	M 104.992	1110531029	7.0	12.56	37.5	F	G1
8185.600	IN-EX	CLASSE E Coupé (C124), E 320 (	M 104.992	6060530230	7.0	12.56	37.5	F	G1
8185.600	IN-EX	CLASSE E Station wagon (S124),	M 111.940	1110531029	7.0	12.56	37.5	F	G1
8185.600	IN-EX	CLASSE E Station wagon (S124),	M 111.940	6060530230	7.0	12.56	37.5	F	G1
8185.600	IN-EX	CLASSE E Station wagon (S124),	M 111.960	1110531029	7.0	12.56	37.5	F	G1
8185.600	IN-EX	CLASSE E Station wagon (S124),	M 111.960	6060530230	7.0	12.56	37.5	F	G1
8185.600	IN-EX	CLASSE E Station wagon (S124),	OM 605.911	1110531029	7.0	12.56	37.5	F	G1
8185.600	IN-EX	CLASSE E Station wagon (S124),	OM 605.911	6060530230	7.0	12.56	37.5	F	G1
8184.600	IN	CLASSE E Station wagon (S124),	OM 605.911	6060531229	6.0	12.56	37.5	F	G1
8168.600	IN	CLASSE E Station wagon (S124),	OM 602.962	6010500624	8.0	14.03	39.5	F-1	G
8168.600	IN	CLASSE E Station wagon (S124),	OM 602.962	6010500824	8.0	14.03	39.5	F-1	G
8185.600	IN-EX	CLASSE E Station wagon (S124),	M 104.942	1110531029	7.0	12.56	37.5	F	G1
8185.600	IN-EX	CLASSE E Station wagon (S124),	M 104.942	6060530230	7.0	12.56	37.5	F	G1
8185.600	IN-EX	CLASSE E Station wagon (S124),	M 104.942	1110531029	7.0	12.56	37.5	F	G1
8185.600	IN-EX	CLASSE E Station wagon (S124),	M 104.942	6060530230	7.0	12.56	37.5	F	G1
8168.600	IN	CLASSE E Station wagon (S124),	OM 603.960	6010500624	8.0	14.03	39.5	F-1	G
8168.600	IN	CLASSE E Station wagon (S124),	OM 603.960	6010500824	8.0	14.03	39.5	F-1	G
8168.600	IN	CLASSE E Station wagon (S124),	OM 603.963	6010500624	8.0	14.03	39.5	F-1	G
8168.600	IN	CLASSE E Station wagon (S124),	OM 603.963	6010500824	8.0	14.03	39.5	F-1	G
8184.600	IN	CLASSE E Station wagon (S124),	OM 606.910	6060531229	6.0	12.56	37.5	F	G1
8185.600	IN-EX	CLASSE E Station wagon (S124),	M 104.992	1110531029	7.0	12.56	37.5	F	G1
8185.600	IN-EX	CLASSE E Station wagon (S124),	M 104.992	6060530230	7.0	12.56	37.5	F	G1
8185.600	IN-EX	CLASSE E Station wagon (S210),	M 111.942	1110531029	7.0	12.56	37.5	F	G1
8185.600	IN-EX	CLASSE E Station wagon (S210),	M 111.942	6060530230	7.0	12.56	37.5	F	G1
8185.600	IN-EX	CLASSE E Station wagon (S210),	M 111.947	1110531029	7.0	12.56	37.5	F	G1
8185.600	IN-EX	CLASSE E Station wagon (S210),	M 111.947	6060530230	7.0	12.56	37.5	F	G1
8185.600	IN-EX	CLASSE E Station wagon (S210),	M 111.957	1110531029	7.0	12.56	37.5	F	G1
8185.600	IN-EX	CLASSE E Station wagon (S210),	M 111.957	6060530230	7.0	12.56	37.5	F	G1
8161.604	IN-EX	CLASSE E Station wagon (S210),	OM 611.961	05080044AB	7.0	12.56	37.5	F	S03
8161.604	IN-EX	CLASSE E Station wagon (S210),	OM 611.961	05080044AB	7.0	12.56	37.5	F	S03
8185.600	IN-EX	CLASSE E Station wagon (S210),	M 111.970	1110531029	7.0	12.56	37.5	F	G1
8185.600	IN-EX	CLASSE E Station wagon (S210),	M 111.970	6060530230	7.0	12.56	37.5	F	G1
8161.604	IN-EX	CLASSE E Station wagon (S210),	M 112.914	05080044AB	7.0	12.56	37.5	F	S03
8185.600	IN-EX	CLASSE E Station wagon (S210),	OM 605.912	1110531029	7.0	12.56	37.5	F	G1
8185.600	IN-EX	CLASSE E Station wagon (S210),	OM 605.912	6060530230	7.0	12.56	37.5	F	G1
8184.600	IN	CLASSE E Station wagon (S210),	OM 605.912	6060531229	6.0	12.56	37.5	F	G1
8185.600	IN-EX	CLASSE E Station wagon (S210),	OM 605.962	1110531029	7.0	12.56	37.5	F	G1
8185.600	IN-EX	CLASSE E Station wagon (S210),	OM 605.962	6060530230	7.0	12.56	37.5	F	G1
8184.600	IN	CLASSE E Station wagon (S210),	OM 605.962	6060531229	6.0	12.56	37.5	F	G1
8161.604	IN-EX	CLASSE E Station wagon (S210),	OM 612.961	05080044AB	7.0	12.56	37.5	F	S03
8161.604	IN-EX	CLASSE E Station wagon (S210),	M 112.921	05080044AB	7.0	12.56	37.5	F	S03
8161.604	IN-EX	CLASSE E Station wagon (S210),	M 112.921	05080044AB	7.0	12.56	37.5	F	S03
8168.600	IN	CLASSE E Station wagon (S210),	OM 602.982	6010500624	8.0	14.03	39.5	F-1	G

(D1) Internal diameter, (D2) External diameter, (B) Shape, (C) Material

VALVE GUIDES

MERCEDES BENZ

IVT Ref.	Type	Model	Engine	OEM Ref.	D1	D2	Length	B	C
8168.600	IN	CLASSE E Station wagon (S210),	OM 602.982	6010500824	8.0	14.03	39.5	F-1	G
8185.600	IN-EX	CLASSE E Station wagon (S210),	OM 606.962	1110531029	7.0	12.56	37.5	F	G1
8185.600	IN-EX	CLASSE E Station wagon (S210),	OM 606.962	6060530230	7.0	12.56	37.5	F	G1
8184.600	IN	CLASSE E Station wagon (S210),	OM 606.962	6060531229	6.0	12.56	37.5	F	G1
8161.604	IN-EX	CLASSE E Station wagon (S210),	OM 613.961	05080044AB	7.0	12.56	37.5	F	S03
8161.604	IN-EX	CLASSE E Station wagon (S211),	OM 646.961	05080044AB	7.0	12.56	37.5	F	S03
8161.604	IN-EX	CLASSE E Station wagon (S211),	OM 646.821	05080044AB	7.0	12.56	37.5	F	S03
8161.604	IN-EX	CLASSE E Station wagon (S211),	M 112.913	05080044AB	7.0	12.56	37.5	F	S03
8161.604	IN-EX	CLASSE E Station wagon (S211),	M 112.917	05080044AB	7.0	12.56	37.5	F	S03
8161.604	IN-EX	CLASSE E Station wagon (S211),	OM 647.961	05080044AB	7.0	12.56	37.5	F	S03
8161.604	IN-EX	CLASSE E Station wagon (S211),	OM 648.961	05080044AB	7.0	12.56	37.5	F	S03
8161.604	IN-EX	CLASSE E Station wagon (S211),	OM 648.961	05080044AB	7.0	12.56	37.5	F	S03
8168.600	IN	CLASSE G (W460), 250 GD (460,	OM 602.930	6010500624	8.0	14.03	39.5	F-1	G
8168.600	IN	CLASSE G (W460), 250 GD (460,	OM 602.930	6010500624	8.0	14.03	39.5	F-1	G
8168.600	IN	CLASSE G (W460), 250 GD (460,	OM 602.930	6010500824	8.0	14.03	39.5	F-1	G
8168.600	IN	CLASSE G (W460), 250 GD (460,	OM 602.930	6010500824	8.0	14.03	39.5	F-1	G
8168.600	IN	CLASSE G (W460), 300 GD (460.	OM 603.912	6010500624	8.0	14.03	39.5	F-1	G
8168.600	IN	CLASSE G (W460), 300 GD (460.	OM 603.912	6010500824	8.0	14.03	39.5	F-1	G
8168.600	IN	CLASSE G (W461), 250 GD (461)	OM 602.939	6010500624	8.0	14.03	39.5	F-1	G
8168.600	IN	CLASSE G (W461), 250 GD (461)	OM 602.939	6010500824	8.0	14.03	39.5	F-1	G
8168.600	IN	CLASSE G (W461), 290 GD/G 29	OM 602.942	6010500624	8.0	14.03	39.5	F-1	G
8168.600	IN	CLASSE G (W461), 290 GD/G 29	OM 602.942	6010500824	8.0	14.03	39.5	F-1	G
8168.600	IN	CLASSE G (W461), G 290 TD (46	OM 602.983	6010500624	8.0	14.03	39.5	F-1	G
8168.600	IN	CLASSE G (W461), G 290 TD (46	OM 602.983	6010500824	8.0	14.03	39.5	F-1	G
8168.600	IN	CLASSE G (W463), 250 GD (463.	OM 602.931	6010500624	8.0	14.03	39.5	F-1	G
8168.600	IN	CLASSE G (W463), 250 GD (463.	OM 602.931	6010500824	8.0	14.03	39.5	F-1	G
8168.600	IN	CLASSE G (W463), 300 GD (463.	OM 603.931	6010500624	8.0	14.03	39.5	F-1	G
8168.600	IN	CLASSE G (W463), 300 GD (463.	OM 603.931	6010500824	8.0	14.03	39.5	F-1	G
8168.600	IN	CLASSE G (W463), 350 Turbo G	OM 603.972	6010500624	8.0	14.03	39.5	F-1	G
8168.600	IN	CLASSE G (W463), 350 Turbo G	OM 603.972	6010500824	8.0	14.03	39.5	F-1	G
8161.604	IN-EX	CLASSE G (W463), G 270 CDI (4	OM 612.965	05080044AB	7.0	12.56	37.5	F	S03
8185.600	IN-EX	CLASSE G (W463), G 320 (463.2	M 104.996	1110531029	7.0	12.56	37.5	F	G1
8185.600	IN-EX	CLASSE G (W463), G 320 (463.2	M 104.996	6060530230	7.0	12.56	37.5	F	G1
8161.604	IN-EX	CLASSE G (W463), G 400 CDI (4	OM 628.962	05080044AB	7.0	12.56	37.5	F	S03
8168.600	IN	CLASSE G Fuoristrada aperto (W	OM 603.931	6010500624	8.0	14.03	39.5	F-1	G
8168.600	IN	CLASSE G Fuoristrada aperto (W	OM 603.931	6010500824	8.0	14.03	39.5	F-1	G
8168.600	IN	CLASSE G Fuoristrada aperto (W	OM 603.972	6010500624	8.0	14.03	39.5	F-1	G
8168.600	IN	CLASSE G Fuoristrada aperto (W	OM 603.972	6010500824	8.0	14.03	39.5	F-1	G
8161.604	IN-EX	CLASSE G Fuoristrada aperto (W	OM 628.962	05080044AB	7.0	12.56	37.5	F	S03
8185.600	IN-EX	CLASSE M (W163), ML 230 (163.	M 111.977	1110531029	7.0	12.56	37.5	F	G1
8185.600	IN-EX	CLASSE M (W163), ML 230 (163.	M 111.977	6060530230	7.0	12.56	37.5	F	G1
8161.604	IN-EX	CLASSE M (W163), ML 270 CDI (	OM 612.963	05080044AB	7.0	12.56	37.5	F	S03
8161.604	IN-EX	CLASSE M (W163), ML 400 CDI (	OM 628.963	05080044AB	7.0	12.56	37.5	F	S03
8185.600	IN-EX	CLASSE S (W140), 300 SE 2.8 (1	M 104.944	1110531029	7.0	12.56	37.5	F	G1
8185.600	IN-EX	CLASSE S (W140), 300 SE 2.8 (1	M 104.944	6060530230	7.0	12.56	37.5	F	G1
8185.600	IN-EX	CLASSE S (W140), 300 SE,SEL/	M 104.990/M 104.994	1110531029	7.0	12.56	37.5	F	G1
8185.600	IN-EX	CLASSE S (W140), 300 SE,SEL/	M 104.990/M 104.994	6060530230	7.0	12.56	37.5	F	G1
8185.600	IN-EX	CLASSE S (W140), 400 SE,SEL/	M 119.971	1110531029	7.0	12.56	37.5	F	G1
8185.600	IN-EX	CLASSE S (W140), 400 SE,SEL/	M 119.971	6060530230	7.0	12.56	37.5	F	G1
8185.600	IN-EX	CLASSE S (W140), S 280 (140.02	M 104.944	1110531029	7.0	12.56	37.5	F	G1
8185.600	IN-EX	CLASSE S (W140), S 280 (140.02	M 104.944	6060530230	7.0	12.56	37.5	F	G1
8184.600	IN	CLASSE S (W140), S 300 Turbo-	OM 606.961	6060531229	6.0	12.56	37.5	F	G1
8168.600	IN	CLASSE S (W140), S 350 Turbo-	OM 603.971	6010500624	8.0	14.03	39.5	F-1	G
8168.600	IN	CLASSE S (W140), S 350 Turbo-	OM 603.971	6010500824	8.0	14.03	39.5	F-1	G
8185.600	IN-EX	CLASSE S (W140), S 420 (140.04	M 119.971	1110531029	7.0	12.56	37.5	F	G1
8185.600	IN-EX	CLASSE S (W140), S 420 (140.04	M 119.971	6060530230	7.0	12.56	37.5	F	G1
8161.604	IN-EX	CLASSE S (W220), S 280 (220.06	M 112.922	05080044AB	7.0	12.56	37.5	F	S03
8161.604	IN-EX	CLASSE S (W220), S 320 CDI (22	OM 648.960	05080044AB	7.0	12.56	37.5	F	S03
8161.604	IN-EX	CLASSE S (W220), S 320 CDI (22	OM 613.960	05080044AB	7.0	12.56	37.5	F	S03
8161.604	IN-EX	CLASSE S (W220), S 400 CDI (22	OM 628.960	05080044AB	7.0	12.56	37.5	F	S03
8161.604	IN-EX	CLASSE S (W220), S 400 CDI (22	OM 628.960	05080044AB	7.0	12.56	37.5	F	S03
8185.600	IN-EX	CLASSE S Coupé (C140), SEC/C	M 119.971/M 119.981	1110531029	7.0	12.56	37.5	F	G1

(D1) Internal diameter, (D2) External diameter, (B) Shape, (C) Material

VALVE GUIDES

MERCEDES BENZ

IVT Ref.	Type	Model	Engine	OEM Ref.	D1	D2	Length	B	C
8185.600	IN-EX	CLASSE S Coupé (C140), SEC/C	M 119.971/M 119.981	6060530230	7.0	12.56	37.5	F	G1
8185.600	IN-EX	CLASSE V (638/2), V 200 (638.21	M 111.948/M 111.950	1110531029	7.0	12.56	37.5	F	G1
8185.600	IN-EX	CLASSE V (638/2), V 200 (638.21	M 111.948/M 111.950	6060530230	7.0	12.56	37.5	F	G1
8161.604	IN-EX	CLASSE V (638/2), V 200 CDI (63	OM 611.980	05080044AB	7.0	12.56	37.5	F	S03
8161.604	IN-EX	CLASSE V (638/2), V 220 CDI (63	OM 611.980	05080044AB	7.0	12.56	37.5	F	S03
8185.600	IN-EX	CLASSE V (638/2), V 230 (638.23	M 111.978	1110531029	7.0	12.56	37.5	F	G1
8185.600	IN-EX	CLASSE V (638/2), V 230 (638.23	M 111.978	6060530230	7.0	12.56	37.5	F	G1
8168.600	IN	CLASSE V (638/2), V 230 TD (638	OM 601.970	6010500624	8.0	14.03	39.5	F-1	G
8168.600	IN	CLASSE V (638/2), V 230 TD (638	OM 601.970	6010500824	8.0	14.03	39.5	F-1	G
8185.600	IN-EX	CLK (C208), 200 (208.335)	M 111.945	1110531029	7.0	12.56	37.5	F	G1
8185.600	IN-EX	CLK (C208), 200 (208.335)	M 111.945	6060530230	7.0	12.56	37.5	F	G1
8185.600	IN-EX	CLK (C208), 200 Kompressor (20	M 111.956	1110531029	7.0	12.56	37.5	F	G1
8185.600	IN-EX	CLK (C208), 200 Kompressor (20	M 111.956	6060530230	7.0	12.56	37.5	F	G1
8185.600	IN-EX	CLK (C208), 200 Kompressor (20	M 111.944	1110531029	7.0	12.56	37.5	F	G1
8185.600	IN-EX	CLK (C208), 200 Kompressor (20	M 111.944	6060530230	7.0	12.56	37.5	F	G1
8185.600	IN-EX	CLK (C208), 230 Kompressor (20	M 111.975/M 111.973	1110531029	7.0	12.56	37.5	F	G1
8185.600	IN-EX	CLK (C208), 230 Kompressor (20	M 111.975/M 111.973	6060530230	7.0	12.56	37.5	F	G1
8185.600	IN-EX	CLK (C208), 230 Kompressor (20	M 111.982	1110531029	7.0	12.56	37.5	F	G1
8185.600	IN-EX	CLK (C208), 230 Kompressor (20	M 111.982	6060530230	7.0	12.56	37.5	F	G1
8161.604	IN-EX	CLK (C209), 220 CDI (209.308)	OM 646.966	05080044AB	7.0	12.56	37.5	F	S03
8161.604	IN-EX	CLK (C209), 220 CDI (209.308)	OM 646.966	05080044AB	7.0	12.56	37.5	F	S03
8161.604	IN-EX	CLK (C209), 240 (209.361)	M 112.912	05080044AB	7.0	12.56	37.5	F	S03
8161.604	IN-EX	CLK (C209), 270 CDI (209.316)	OM 612.967/OM 612.962	05080044AB	7.0	12.56	37.5	F	S03
8185.600	IN-EX	CLK Cabriolet (A208), 200 (208.43	M 111.945/M 111.941	1110531029	7.0	12.56	37.5	F	G1
8185.600	IN-EX	CLK Cabriolet (A208), 200 (208.43	M 111.945/M 111.941	6060530230	7.0	12.56	37.5	F	G1
8185.600	IN-EX	CLK Cabriolet (A208), 200 Kompr	M 111.956	1110531029	7.0	12.56	37.5	F	G1
8185.600	IN-EX	CLK Cabriolet (A208), 200 Kompr	M 111.956	6060530230	7.0	12.56	37.5	F	G1
8185.600	IN-EX	CLK Cabriolet (A208), 200 Kompr	M 111.944	1110531029	7.0	12.56	37.5	F	G1
8185.600	IN-EX	CLK Cabriolet (A208), 200 Kompr	M 111.944	6060530230	7.0	12.56	37.5	F	G1
8185.600	IN-EX	CLK Cabriolet (A208), 230 Kompr	M 111.975/M 111.973	1110531029	7.0	12.56	37.5	F	G1
8185.600	IN-EX	CLK Cabriolet (A208), 230 Kompr	M 111.975/M 111.973	6060530230	7.0	12.56	37.5	F	G1
8185.600	IN-EX	CLK Cabriolet (A208), 230 Kompr	M 111.982	1110531029	7.0	12.56	37.5	F	G1
8185.600	IN-EX	CLK Cabriolet (A208), 230 Kompr	M 111.982	6060530230	7.0	12.56	37.5	F	G1
8161.604	IN-EX	CLK Cabriolet (A209), CLK 240 (2	M 112.912	05080044AB	7.0	12.56	37.5	F	S03
8012.600	IN-EX	Conecto C,H,M,UE	OM 457.942	5410531230	9.0	15.03	61.0	F	G1
8185.600	IN-EX	COUPE (C124), 220 CE (124.042)	M 111.960	1110531029	7.0	12.56	37.5	F	G1
8185.600	IN-EX	COUPE (C124), 220 CE (124.042)	M 111.960	6060530230	7.0	12.56	37.5	F	G1
8185.600	IN-EX	COUPE (C124), 320 CE (124.052)	M 104.992	1110531029	7.0	12.56	37.5	F	G1
8185.600	IN-EX	COUPE (C124), 320 CE (124.052)	M 104.992	6060530230	7.0	12.56	37.5	F	G1
8066.600	EX	E 200 D	OM 601.912	6010500924	9.0	14.03	37.5	F-1	G
8066.600	EX	E 200 D	OM 601.912	6010501124	9.0	14.03	37.5	F-1	G
8066.600	EX	E 250 Turbo D	OM 602.962	6010500924	9.0	14.03	37.5	F-1	G
8066.600	EX	E 250 Turbo D	OM 602.962	6010501124	9.0	14.03	37.5	F-1	G
8066.600	EX	E 250 Turbo D SW	OM 602.962	6010500924	9.0	14.03	37.5	F-1	G
8066.600	EX	E 250 Turbo D SW	OM 602.962	6010501124	9.0	14.03	37.5	F-1	G
8066.600	EX	E 290 T Turbo D SW	OM 602.982	6010500924	9.0	14.03	37.5	F-1	G
8066.600	EX	E 290 T Turbo D SW	OM 602.982	6010501124	9.0	14.03	37.5	F-1	G
8066.600	EX	E 290 Turbo D	OM 602.982	6010500924	9.0	14.03	37.5	F-1	G
8066.600	EX	E 290 Turbo D	OM 602.982	6010501124	9.0	14.03	37.5	F-1	G
8066.600	EX	E 300 T Turbo D 4matic SW	OM 603.963	6010500924	9.0	14.03	37.5	F-1	G
8066.600	EX	E 300 T Turbo D 4matic SW	OM 603.963	6010501124	9.0	14.03	37.5	F-1	G
8066.600	EX	E 300 T Turbo D SW	OM 603.960	6010500924	9.0	14.03	37.5	F-1	G
8066.600	EX	E 300 T Turbo D SW	OM 603.960	6010501124	9.0	14.03	37.5	F-1	G
8066.600	EX	E 300 Turbo D	OM 603.960	6010500924	9.0	14.03	37.5	F-1	G
8066.600	EX	E 300 Turbo D	OM 603.960	6010501124	9.0	14.03	37.5	F-1	G
8066.600	EX	E 300 Turbo D 4matic	OM 603.963	6010500924	9.0	14.03	37.5	F-1	G
8066.600	EX	E 300 Turbo D 4matic	OM 603.963	6010501124	9.0	14.03	37.5	F-1	G
8066.600	EX	G 250 GD	OM 602.930	6010500924	9.0	14.03	37.5	F-1	G
8066.600	EX	G 250 GD	OM 602.930	6010501124	9.0	14.03	37.5	F-1	G
8066.600	EX	G 250 GD	OM 602.931	6010500924	9.0	14.03	37.5	F-1	G
8066.600	EX	G 250 GD	OM 602.931	6010501124	9.0	14.03	37.5	F-1	G
8066.600	EX	G 250 GD	OM 602.939	6010500924	9.0	14.03	37.5	F-1	G

(D1) Internal diameter, (D2) External diameter, (B) Shape, (C) Material

VALVE GUIDES

MERCEDES BENZ

IVT Ref.	Type	Model	Engine	OEM Ref.	D1	D2	Length	B	C
8066.600	EX	G 250 GD	OM 602.939	6010501124	9.0	14.03	37.5	F-1	G
8066.600	EX	G 290 GD	OM 602.942	6010500924	9.0	14.03	37.5	F-1	G
8066.600	EX	G 290 GD	OM 602.942	6010501124	9.0	14.03	37.5	F-1	G
8066.600	EX	G 290 T D	OM 602.983	6010500924	9.0	14.03	37.5	F-1	G
8066.600	EX	G 290 T D	OM 602.983	6010501124	9.0	14.03	37.5	F-1	G
8066.600	EX	G 300 GD	OM 603.912	6010500924	9.0	14.03	37.5	F-1	G
8066.600	EX	G 300 GD	OM 603.912	6010501124	9.0	14.03	37.5	F-1	G
8066.600	EX	G 300 GD	OM 603.931	6010500924	9.0	14.03	37.5	F-1	G
8066.600	EX	G 300 GD	OM 603.931	6010501124	9.0	14.03	37.5	F-1	G
8066.600	EX	G 300 GD Fuoristrada	OM 603.931	6010500924	9.0	14.03	37.5	F-1	G
8066.600	EX	G 300 GD Fuoristrada	OM 603.931	6010501124	9.0	14.03	37.5	F-1	G
8066.600	EX	G 350 G Turbo D Fuoristrada	OM 603.972	6010500924	9.0	14.03	37.5	F-1	G
8066.600	EX	G 350 G Turbo D Fuoristrada	OM 603.972	6010501124	9.0	14.03	37.5	F-1	G
8066.600	EX	G 350 Turbo GD	OM 603.972	6010500924	9.0	14.03	37.5	F-1	G
8066.600	EX	G 350 Turbo GD	OM 603.972	6010501124	9.0	14.03	37.5	F-1	G
8075.600	IN-EX	Industrial Eng. No. 002308->	OM424	4030530030	12.0	18.04	67.0	F	G1
8075.600	IN-EX	Industrial Eng. No. 002308->	OM424	4220530430	12.0	18.04	67.0	F	G1
8075.600	IN-EX	Industrial Eng. No. 006645->	OM404	4030530030	12.0	18.04	67.0	F	G1
8075.600	IN-EX	Industrial Eng. No. 006645->	OM404	4220530430	12.0	18.04	67.0	F	G1
8075.600	IN-EX	Industrial Eng. No. 006645->	OM404 A D	4030530030	12.0	18.04	67.0	F	G1
8075.600	IN-EX	Industrial Eng. No. 006645->	OM404 A D	4220530430	12.0	18.04	67.0	F	G1
8075.600	IN-EX	Industrial Engines	OM424 A-LA D	4030530030	12.0	18.04	67.0	F	G1
8075.600	IN-EX	Industrial Engines	OM424 A-LA D	4220530430	12.0	18.04	67.0	F	G1
8075.600	IN-EX	Industrial Engines	OM444 A-LA D	4030530030	12.0	18.04	67.0	F	G1
8075.600	IN-EX	Industrial Engines	OM444 A-LA D	4220530430	12.0	18.04	67.0	F	G1
8012.600	IN-EX	Integro L	OM 457.952	5410531230	9.0	15.03	61.0	F	G1
8012.600	IN-EX	Integro M	OM 457.952	5410531230	9.0	15.03	61.0	F	G1
8012.600	IN-EX	Integro M	OM 457.965	5410531230	9.0	15.03	61.0	F	G1
8168.600	IN	KOMBI Kombi (S124), 200 T D (1	OM 601.912	6010500624	8.0	14.03	39.5	F-1	G
8168.600	IN	KOMBI Kombi (S124), 200 T D (1	OM 601.912	6010500624	8.0	14.03	39.5	F-1	G
8168.600	IN	KOMBI Kombi (S124), 200 T D (1	OM 601.912	6010500824	8.0	14.03	39.5	F-1	G
8168.600	IN	KOMBI Kombi (S124), 200 T D (1	OM 601.912	6010500824	8.0	14.03	39.5	F-1	G
8185.600	IN-EX	KOMBI Kombi (S124), 200 TE (12	M 111.940	1110531029	7.0	12.56	37.5	F	G1
8185.600	IN-EX	KOMBI Kombi (S124), 200 TE (12	M 111.940	6060530230	7.0	12.56	37.5	F	G1
8185.600	IN-EX	KOMBI Kombi (S124), 220 TE (12	M 111.960	1110531029	7.0	12.56	37.5	F	G1
8185.600	IN-EX	KOMBI Kombi (S124), 220 TE (12	M 111.960	6060530230	7.0	12.56	37.5	F	G1
8168.600	IN	KOMBI Kombi (S124), 250 T D (1	OM 602.912	6010500624	8.0	14.03	39.5	F-1	G
8168.600	IN	KOMBI Kombi (S124), 250 T D (1	OM 602.912	6010500624	8.0	14.03	39.5	F-1	G
8168.600	IN	KOMBI Kombi (S124), 250 T D (1	OM 602.912	6010500824	8.0	14.03	39.5	F-1	G
8168.600	IN	KOMBI Kombi (S124), 250 T D (1	OM 602.912	6010500824	8.0	14.03	39.5	F-1	G
8168.600	IN	KOMBI Kombi (S124), 250 TD Tur	OM 602.962	6010500624	8.0	14.03	39.5	F-1	G
8168.600	IN	KOMBI Kombi (S124), 250 TD Tur	OM 602.962	6010500824	8.0	14.03	39.5	F-1	G
8185.600	IN-EX	KOMBI Kombi (S124), 280 TE (12	M 104.942	1110531029	7.0	12.56	37.5	F	G1
8185.600	IN-EX	KOMBI Kombi (S124), 280 TE (12	M 104.942	6060530230	7.0	12.56	37.5	F	G1
8168.600	IN	KOMBI Kombi (S124), 300 T D (1	OM 603.912	6010500624	8.0	14.03	39.5	F-1	G
8168.600	IN	KOMBI Kombi (S124), 300 T D (1	OM 603.912	6010500624	8.0	14.03	39.5	F-1	G
8168.600	IN	KOMBI Kombi (S124), 300 T D (1	OM 603.912	6010500824	8.0	14.03	39.5	F-1	G
8168.600	IN	KOMBI Kombi (S124), 300 T D (1	OM 603.912	6010500824	8.0	14.03	39.5	F-1	G
8168.600	IN	KOMBI Kombi (S124), 300 T Turb	OM 603.960/OM 603.963	6010500624	8.0	14.03	39.5	F-1	G
8168.600	IN	KOMBI Kombi (S124), 300 T Turb	OM 603.960/OM 603.963	6010500824	8.0	14.03	39.5	F-1	G
8168.600	IN	KOMBI Kombi (S124), 300 T Turb	OM 603.960	6010500624	8.0	14.03	39.5	F-1	G
8168.600	IN	KOMBI Kombi (S124), 300 T Turb	OM 603.960	6010500824	8.0	14.03	39.5	F-1	G
8168.600	IN	KOMBI Kombi (S124), 300 T Turb	OM 603.960	6010500624	8.0	14.03	39.5	F-1	G
8168.600	IN	KOMBI Kombi (S124), 300 T Turb	OM 603.960	6010500824	8.0	14.03	39.5	F-1	G
8168.600	IN	KOMBI Kombi (S124), 300 T Turb	OM 603.963	6010500624	8.0	14.03	39.5	F-1	G
8168.600	IN	KOMBI Kombi (S124), 300 T Turb	OM 603.963	6010500824	8.0	14.03	39.5	F-1	G
8185.600	IN-EX	KOMBI Kombi (S124), 320 TE (12	M 104.992	1110531029	7.0	12.56	37.5	F	G1
8185.600	IN-EX	KOMBI Kombi (S124), 320 TE (12	M 104.992	6060530230	7.0	12.56	37.5	F	G1
8081.602	EX	L 408 / L 409 / L 410	M102 - 102.943/.959	1020501824	9.0	14.04	51.0	F-1	Cu
8081.602	EX	LK 408 / LK 409 / LK 410	M102 - 102.943/.959	1020501824	9.0	14.04	51.0	F-1	Cu
8081.602	EX	O 309 B / 410 / 510	M102 - 102.943/.959	1020501824	9.0	14.04	51.0	F-1	Cu
8012.600	IN-EX	O 403, 403 SHD	OM 457.944	5410531230	9.0	15.03	61.0	F	G1

(D1) Internal diameter, (D2) External diameter, (B) Shape, (C) Material

VALVE GUIDES

MERCEDES BENZ

IVT Ref.	Type	Model	Engine	OEM Ref.	D1	D2	Length	B	C
8066.600	EX	S 300 SD	OM 603.971	6010500924	9.0	14.03	37.5	F-1	G
8066.600	EX	S 300 SD	OM 603.971	6010501124	9.0	14.03	37.5	F-1	G
8066.600	EX	S 350 Turbo D	OM 603.971	6010500924	9.0	14.03	37.5	F-1	G
8066.600	EX	S 350 Turbo D	OM 603.971	6010501124	9.0	14.03	37.5	F-1	G
8100.100	EX	Series 1117/1417C No. 013601->	OM366 A D	3520533730	10.0	15.03	67.0	A-1	G
8100.100	EX	Series 1117/1417C No. 013601->	OM366 A D	3660530230	10.0	15.03	67.0	A-1	G
8100.100	EX	Series 1120/1320 No. 013601->	OM366 LA D 366.980->.988	3520533730	10.0	15.03	67.0	A-1	G
8100.100	EX	Series 1120/1320 No. 013601->	OM366 LA D 366.980->.988	3660530230	10.0	15.03	67.0	A-1	G
8100.100	EX	Series 1617C No. 013601->	OM366 A D	3520533730	10.0	15.03	67.0	A-1	G
8100.100	EX	Series 1617C No. 013601->	OM366 A D	3660530230	10.0	15.03	67.0	A-1	G
8075.600	IN-EX	Series 1750 / 2550 / 2650	OM440 440.971	4030530030	12.0	18.04	67.0	F	G1
8075.600	IN-EX	Series 1750 / 2550 / 2650	OM440 440.971	4220530430	12.0	18.04	67.0	F	G1
8075.600	IN-EX	Series 3250 / 3550 / 4850	OM440 440.971	4030530030	12.0	18.04	67.0	F	G1
8075.600	IN-EX	Series 3250 / 3550 / 4850	OM440 440.971	4220530430	12.0	18.04	67.0	F	G1
8075.600	IN-EX	Series 3538 / 3544 / 2548	OM440 440.975	4030530030	12.0	18.04	67.0	F	G1
8075.600	IN-EX	Series 3538 / 3544 / 2548	OM440 440.975	4220530430	12.0	18.04	67.0	F	G1
8075.600	IN-EX	Series 3550 / 4844 / 4853	OM440 440.975	4030530030	12.0	18.04	67.0	F	G1
8075.600	IN-EX	Series 3550 / 4844 / 4853	OM440 440.975	4220530430	12.0	18.04	67.0	F	G1
8100.100	EX	Series 611 D / 711 D / 811 D	OM364 A	3520533730	10.0	15.03	67.0	A-1	G
8100.100	EX	Series 611 D / 711 D / 811 D	OM364 A	3660530230	10.0	15.03	67.0	A-1	G
8185.600	IN-EX	SL (R129), 280 (129.058)	M 104.943	1110531029	7.0	12.56	37.5	F	G1
8185.600	IN-EX	SL (R129), 280 (129.058)	M 104.943	6060530230	7.0	12.56	37.5	F	G1
8161.604	IN-EX	SL (R129), 280 (129.059)	M 112.923	05080044AB	7.0	12.56	37.5	F	S03
8185.600	IN-EX	SL (R129), 320 (129.064)	M 112.943	1110531029	7.0	12.56	37.5	F	G1
8185.600	IN-EX	SL (R129), 320 (129.064)	M 112.943	6060530230	7.0	12.56	37.5	F	G1
8185.600	IN-EX	SLK (R170), 200 (170.435)	M 111.946	1110531029	7.0	12.56	37.5	F	G1
8185.600	IN-EX	SLK (R170), 200 (170.435)	M 111.946	6060530230	7.0	12.56	37.5	F	G1
8185.600	IN-EX	SLK (R170), 200 Kompressor (17	M 111.943	1110531029	7.0	12.56	37.5	F	G1
8185.600	IN-EX	SLK (R170), 200 Kompressor (17	M 111.943	6060530230	7.0	12.56	37.5	F	G1
8185.600	IN-EX	SLK (R170), 230 Kompressor (17	M 111.973	1110531029	7.0	12.56	37.5	F	G1
8185.600	IN-EX	SLK (R170), 230 Kompressor (17	M 111.973	6060530230	7.0	12.56	37.5	F	G1
8185.600	IN-EX	SLK (R170), 230 Kompressor (17	M 111.983	1110531029	7.0	12.56	37.5	F	G1
8185.600	IN-EX	SLK (R170), 230 Kompressor (17	M 111.983	6060530230	7.0	12.56	37.5	F	G1
8066.600	EX	Sprinter 2-t 208 D	OM 601.943	6010500924	9.0	14.03	37.5	F-1	G
8066.600	EX	Sprinter 2-t 208 D	OM 601.943	6010501124	9.0	14.03	37.5	F-1	G
8066.600	EX	Sprinter 2-t 210 D	OM 602.980	6010500924	9.0	14.03	37.5	F-1	G
8066.600	EX	Sprinter 2-t 210 D	OM 602.980	6010501124	9.0	14.03	37.5	F-1	G
8066.600	EX	Sprinter 2-t 212 D	OM 602.980	6010500924	9.0	14.03	37.5	F-1	G
8066.600	EX	Sprinter 2-t 212 D	OM 602.980	6010501124	9.0	14.03	37.5	F-1	G
8066.600	EX	Sprinter 2-t Autobus 208 D	OM 601.943	6010500924	9.0	14.03	37.5	F-1	G
8066.600	EX	Sprinter 2-t Autobus 208 D	OM 601.943	6010501124	9.0	14.03	37.5	F-1	G
8066.600	EX	Sprinter 2-t Autobus 210 D	OM 602.980	6010500924	9.0	14.03	37.5	F-1	G
8066.600	EX	Sprinter 2-t Autobus 210 D	OM 602.980	6010501124	9.0	14.03	37.5	F-1	G
8066.600	EX	Sprinter 2-t Autobus 212 D	OM 602.980	6010500924	9.0	14.03	37.5	F-1	G
8066.600	EX	Sprinter 2-t Autobus 212 D	OM 602.980	6010501124	9.0	14.03	37.5	F-1	G
8161.604	IN-EX	SPRINTER 2-t Bus (901, 902), 20	OM 611.987	05080044AB	7.0	12.56	37.5	F	S03
8168.600	IN	SPRINTER 2-t Bus (901, 902), 20	OM 601.943	6010500624	8.0	14.03	39.5	F-1	G
8168.600	IN	SPRINTER 2-t Bus (901, 902), 20	OM 601.943	6010500824	8.0	14.03	39.5	F-1	G
8161.604	IN-EX	SPRINTER 2-t Bus (901, 902), 21	OM 611.981	05080044AB	7.0	12.56	37.5	F	S03
8168.600	IN	SPRINTER 2-t Bus (901, 902), 21	OM 602.980	6010500624	8.0	14.03	39.5	F-1	G
8168.600	IN	SPRINTER 2-t Bus (901, 902), 21	OM 602.980	6010500824	8.0	14.03	39.5	F-1	G
8161.604	IN-EX	SPRINTER 2-t Bus (901, 902), 21	OM 611.981	05080044AB	7.0	12.56	37.5	F	S03
8185.600	IN-EX	SPRINTER 2-t Bus (901, 902), 21	M 111.979	1110531029	7.0	12.56	37.5	F	G1
8185.600	IN-EX	SPRINTER 2-t Bus (901, 902), 21	M 111.979	6060530230	7.0	12.56	37.5	F	G1
8185.600	IN-EX	SPRINTER 2-t Bus (901, 902), 21	M 111.984	1110531029	7.0	12.56	37.5	F	G1
8185.600	IN-EX	SPRINTER 2-t Bus (901, 902), 21	M 111.984	6060530230	7.0	12.56	37.5	F	G1
8161.604	IN-EX	SPRINTER 2-t Bus (901, 902), 21	OM 612.981	05080044AB	7.0	12.56	37.5	F	S03
8066.600	EX	Sprinter 2-t Furgonato 208 D	OM 601.943	6010500924	9.0	14.03	37.5	F-1	G
8066.600	EX	Sprinter 2-t Furgonato 208 D	OM 601.943	6010501124	9.0	14.03	37.5	F-1	G
8066.600	EX	Sprinter 2-t Furgonato 210 D	OM 602.980	6010500924	9.0	14.03	37.5	F-1	G
8066.600	EX	Sprinter 2-t Furgonato 210 D	OM 602.980	6010501124	9.0	14.03	37.5	F-1	G
8066.600	EX	Sprinter 2-t Furgonato 212 D	OM 602.980	6010500924	9.0	14.03	37.5	F-1	G

(D1) Internal diameter, (D2) External diameter, (B) Shape, (C) Material

VALVE GUIDES

MERCEDES BENZ

IVT Ref.	Type	Model	Engine	OEM Ref.	D1	D2	Length	B	C
8066.600	EX	Sprinter 2-t Furgonato 212 D	OM 602.980	6010501124	9.0	14.03	37.5	F-1	G
8161.604	IN-EX	SPRINTER 2-t Kasten (901, 902),	OM 611.987	05080044AB	7.0	12.56	37.5	F	S03
8168.600	IN	SPRINTER 2-t Kasten (901, 902),	OM 601.943	6010500624	8.0	14.03	39.5	F-1	G
8168.600	IN	SPRINTER 2-t Kasten (901, 902),	OM 601.943	6010500624	8.0	14.03	39.5	F-1	G
8168.600	IN	SPRINTER 2-t Kasten (901, 902),	OM 601.943	6010500824	8.0	14.03	39.5	F-1	G
8168.600	IN	SPRINTER 2-t Kasten (901, 902),	OM 601.943	6010500824	8.0	14.03	39.5	F-1	G
8168.600	IN	SPRINTER 2-t Kasten (901, 902),	OM 602.980	6010500624	8.0	14.03	39.5	F-1	G
8168.600	IN	SPRINTER 2-t Kasten (901, 902),	OM 602.980	6010500824	8.0	14.03	39.5	F-1	G
8161.604	IN-EX	SPRINTER 2-t Kasten (901, 902),	OM 611.981	05080044AB	7.0	12.56	37.5	F	S03
8168.600	IN	SPRINTER 2-t Kasten (901, 902),	OM 602.980	6010500624	8.0	14.03	39.5	F-1	G
8168.600	IN	SPRINTER 2-t Kasten (901, 902),	OM 602.980	6010500824	8.0	14.03	39.5	F-1	G
8161.604	IN-EX	SPRINTER 2-t Kasten (901, 902),	OM 611.981	05080044AB	7.0	12.56	37.5	F	S03
8185.600	IN-EX	SPRINTER 2-t Kasten (901, 902),	M 111.979/M 111.984	1110531029	7.0	12.56	37.5	F	G1
8185.600	IN-EX	SPRINTER 2-t Kasten (901, 902),	M 111.979/M 111.984	6060530230	7.0	12.56	37.5	F	G1
8185.600	IN-EX	SPRINTER 2-t Kasten (901, 902),	M 111.984	1110531029	7.0	12.56	37.5	F	G1
8185.600	IN-EX	SPRINTER 2-t Kasten (901, 902),	M 111.984	6060530230	7.0	12.56	37.5	F	G1
8161.604	IN-EX	SPRINTER 2-t Kasten (901, 902),	OM 612.981	05080044AB	7.0	12.56	37.5	F	S03
8161.604	IN-EX	SPRINTER 2-t Pritsche/Fahrgeste	OM 611.987	05080044AB	7.0	12.56	37.5	F	S03
8168.600	IN	SPRINTER 2-t Pritsche/Fahrgeste	OM 601.943	6010500624	8.0	14.03	39.5	F-1	G
8168.600	IN	SPRINTER 2-t Pritsche/Fahrgeste	OM 601.943	6010500624	8.0	14.03	39.5	F-1	G
8168.600	IN	SPRINTER 2-t Pritsche/Fahrgeste	OM 601.943	6010500824	8.0	14.03	39.5	F-1	G
8168.600	IN	SPRINTER 2-t Pritsche/Fahrgeste	OM 601.943	6010500824	8.0	14.03	39.5	F-1	G
8168.600	IN	SPRINTER 2-t Pritsche/Fahrgeste	OM 602.980	6010500624	8.0	14.03	39.5	F-1	G
8168.600	IN	SPRINTER 2-t Pritsche/Fahrgeste	OM 602.980	6010500824	8.0	14.03	39.5	F-1	G
8161.604	IN-EX	SPRINTER 2-t Pritsche/Fahrgeste	OM 611.981	05080044AB	7.0	12.56	37.5	F	S03
8168.600	IN	SPRINTER 2-t Pritsche/Fahrgeste	OM 602.980	6010500624	8.0	14.03	39.5	F-1	G
8168.600	IN	SPRINTER 2-t Pritsche/Fahrgeste	OM 602.980	6010500824	8.0	14.03	39.5	F-1	G
8161.604	IN-EX	SPRINTER 2-t Pritsche/Fahrgeste	OM 611.981	05080044AB	7.0	12.56	37.5	F	S03
8185.600	IN-EX	SPRINTER 2-t Pritsche/Fahrgeste	M 111.979	1110531029	7.0	12.56	37.5	F	G1
8185.600	IN-EX	SPRINTER 2-t Pritsche/Fahrgeste	M 111.979	6060530230	7.0	12.56	37.5	F	G1
8185.600	IN-EX	SPRINTER 2-t Pritsche/Fahrgeste	M 111.984	1110531029	7.0	12.56	37.5	F	G1
8185.600	IN-EX	SPRINTER 2-t Pritsche/Fahrgeste	M 111.984	6060530230	7.0	12.56	37.5	F	G1
8161.604	IN-EX	SPRINTER 2-t Pritsche/Fahrgeste	OM 612.981	05080044AB	7.0	12.56	37.5	F	S03
8161.604	IN-EX	SPRINTER 3,5-t Bus (906), 311 C	OM 646.985	05080044AB	7.0	12.56	37.5	F	S03
8161.604	IN-EX	SPRINTER 3,5-t Bus (906), 311 C	OM 646.985	05080044AB	7.0	12.56	37.5	F	S03
8161.604	IN-EX	SPRINTER 3,5-t Bus (906), 315 C	OM 646.990/OM 646.989	05080044AB	7.0	12.56	37.5	F	S03
8161.604	IN-EX	SPRINTER 3,5-t Bus (906), 315 C	OM 646.990/OM 646.989	05080044AB	7.0	12.56	37.5	F	S03
8161.604	IN-EX	SPRINTER 3,5-t Kasten (906), 30	OM 646.984	05080044AB	7.0	12.56	37.5	F	S03
8161.604	IN-EX	SPRINTER 3,5-t Kasten (906), 31	OM 646.985	05080044AB	7.0	12.56	37.5	F	S03
8161.604	IN-EX	SPRINTER 3,5-t Kasten (906), 31	OM 646.985	05080044AB	7.0	12.56	37.5	F	S03
8161.604	IN-EX	SPRINTER 3,5-t Kasten (906), 31	OM 646.986	05080044AB	7.0	12.56	37.5	F	S03
8161.604	IN-EX	SPRINTER 3,5-t Kasten (906), 31	OM 646.990/OM 646.989	05080044AB	7.0	12.56	37.5	F	S03
8161.604	IN-EX	SPRINTER 3,5-t Kasten (906), 31	OM 646.990/OM 646.989	05080044AB	7.0	12.56	37.5	F	S03
8161.604	IN-EX	SPRINTER 3,5-t Pritsche/Fahrges	OM 646.984	05080044AB	7.0	12.56	37.5	F	S03
8161.604	IN-EX	SPRINTER 3,5-t Pritsche/Fahrges	OM 646.985	05080044AB	7.0	12.56	37.5	F	S03
8161.604	IN-EX	SPRINTER 3,5-t Pritsche/Fahrges	OM 646.985	05080044AB	7.0	12.56	37.5	F	S03
8161.604	IN-EX	SPRINTER 3,5-t Pritsche/Fahrges	OM 646.986	05080044AB	7.0	12.56	37.5	F	S03
8161.604	IN-EX	SPRINTER 3,5-t Pritsche/Fahrges	OM 651.956/OM 651.955	05080044AB	7.0	12.56	37.5	F	S03
8161.604	IN-EX	SPRINTER 3,5-t Pritsche/Fahrges	OM 651.956/OM 651.955	05080044AB	7.0	12.56	37.5	F	S03
8161.604	IN-EX	SPRINTER 3,5-t Pritsche/Fahrges	OM 646.990/OM 646.989	05080044AB	7.0	12.56	37.5	F	S03
8161.604	IN-EX	SPRINTER 3,5-t Pritsche/Fahrges	OM 646.990/OM 646.989	05080044AB	7.0	12.56	37.5	F	S03
8066.600	EX	Sprinter 3-t 308 D	OM 601.943	6010500924	9.0	14.03	37.5	F-1	G
8066.600	EX	Sprinter 3-t 308 D	OM 601.943	6010501124	9.0	14.03	37.5	F-1	G
8066.600	EX	Sprinter 3-t 310 D	OM 602.980	6010500924	9.0	14.03	37.5	F-1	G
8066.600	EX	Sprinter 3-t 310 D	OM 602.980	6010501124	9.0	14.03	37.5	F-1	G
8066.600	EX	Sprinter 3-t 312 D	OM 602.980	6010500924	9.0	14.03	37.5	F-1	G
8066.600	EX	Sprinter 3-t 312 D	OM 602.980	6010501124	9.0	14.03	37.5	F-1	G
8066.600	EX	Sprinter 3-t Autobus 308 D	OM 601.943	6010500924	9.0	14.03	37.5	F-1	G
8066.600	EX	Sprinter 3-t Autobus 308 D	OM 601.943	6010501124	9.0	14.03	37.5	F-1	G
8066.600	EX	Sprinter 3-t Autobus 310 D	OM 602.980	6010500924	9.0	14.03	37.5	F-1	G
8066.600	EX	Sprinter 3-t Autobus 310 D	OM 602.980	6010501124	9.0	14.03	37.5	F-1	G
8066.600	EX	Sprinter 3-t Autobus 312 D	OM 602.980	6010500924	9.0	14.03	37.5	F-1	G

(D1) Internal diameter, (D2) External diameter, (B) Shape, (C) Material

VALVE GUIDES

MERCEDES BENZ

IVT Ref.	Type	Model	Engine	OEM Ref.	D1	D2	Length	B	C
8066.600	EX	Sprinter 3-t Autobus 312 D	OM 602.980	6010501124	9.0	14.03	37.5	F-1	G
8161.604	IN-EX	SPRINTER 3-t Bus (903), 308 CDI	OM 611.987	05080044AB	7.0	12.56	37.5	F	S03
8168.600	IN	SPRINTER 3-t Bus (903), 308 D	OM 601.943	6010500624	8.0	14.03	39.5	F-1	G
8168.600	IN	SPRINTER 3-t Bus (903), 308 D	OM 601.943	6010500824	8.0	14.03	39.5	F-1	G
8168.600	IN	SPRINTER 3-t Bus (903), 308 D (	OM 601.943	6010500624	8.0	14.03	39.5	F-1	G
8168.600	IN	SPRINTER 3-t Bus (903), 308 D (	OM 601.943	6010500824	8.0	14.03	39.5	F-1	G
8168.600	IN	SPRINTER 3-t Bus (903), 310 D	OM 602.980	6010500624	8.0	14.03	39.5	F-1	G
8168.600	IN	SPRINTER 3-t Bus (903), 310 D	OM 602.980	6010500824	8.0	14.03	39.5	F-1	G
8168.600	IN	SPRINTER 3-t Bus (903), 310 D (	OM 602.980	6010500624	8.0	14.03	39.5	F-1	G
8168.600	IN	SPRINTER 3-t Bus (903), 310 D (	OM 602.980	6010500824	8.0	14.03	39.5	F-1	G
8161.604	IN-EX	SPRINTER 3-t Bus (903), 311 CDI	OM 611.981	05080044AB	7.0	12.56	37.5	F	S03
8161.604	IN-EX	SPRINTER 3-t Bus (903), 311 CDI	OM 611.981	05080044AB	7.0	12.56	37.5	F	S03
8168.600	IN	SPRINTER 3-t Bus (903), 312 D 2	OM 602.980	6010500624	8.0	14.03	39.5	F-1	G
8168.600	IN	SPRINTER 3-t Bus (903), 312 D 2	OM 602.980	6010500824	8.0	14.03	39.5	F-1	G
8168.600	IN	SPRINTER 3-t Bus (903), 312 D 2	OM 602.980	6010500624	8.0	14.03	39.5	F-1	G
8168.600	IN	SPRINTER 3-t Bus (903), 312 D 2	OM 602.980	6010500824	8.0	14.03	39.5	F-1	G
8161.604	IN-EX	SPRINTER 3-t Bus (903), 313 CDI	OM 611.981	05080044AB	7.0	12.56	37.5	F	S03
8161.604	IN-EX	SPRINTER 3-t Bus (903), 313 CDI	OM 611.981	05080044AB	7.0	12.56	37.5	F	S03
8185.600	IN-EX	SPRINTER 3-t Bus (903), 314	M 111.984	1110531029	7.0	12.56	37.5	F	G1
8185.600	IN-EX	SPRINTER 3-t Bus (903), 314	M 111.984	6060530230	7.0	12.56	37.5	F	G1
8185.600	IN-EX	SPRINTER 3-t Bus (903), 314 4x4	M 111.984	1110531029	7.0	12.56	37.5	F	G1
8185.600	IN-EX	SPRINTER 3-t Bus (903), 314 4x4	M 111.984	6060530230	7.0	12.56	37.5	F	G1
8161.604	IN-EX	SPRINTER 3-t Bus (903), 316 CDI	OM 612.981	05080044AB	7.0	12.56	37.5	F	S03
8161.604	IN-EX	SPRINTER 3-t Bus (903), 316 CDI	OM 612.981	05080044AB	7.0	12.56	37.5	F	S03
8161.604	IN-EX	SPRINTER 3-t Bus (906), 211 CDI	OM 646.985	05080044AB	7.0	12.56	37.5	F	S03
8161.604	IN-EX	SPRINTER 3-t Bus (906), 213 CDI	OM 651.956/OM 651.955	05080044AB	7.0	12.56	37.5	F	S03
8161.604	IN-EX	SPRINTER 3-t Bus (906), 215 CDI	OM 646.990/OM 646.986/OM	05080044AB	7.0	12.56	37.5	F	S03
8066.600	EX	Sprinter 3-t Furgonato 308 D	OM 601.943	6010500924	9.0	14.03	37.5	F-1	G
8066.600	EX	Sprinter 3-t Furgonato 308 D	OM 601.943	6010501124	9.0	14.03	37.5	F-1	G
8066.600	EX	Sprinter 3-t Furgonato 310 D	OM 602.980	6010500924	9.0	14.03	37.5	F-1	G
8066.600	EX	Sprinter 3-t Furgonato 310 D	OM 602.980	6010501124	9.0	14.03	37.5	F-1	G
8066.600	EX	Sprinter 3-t Furgonato 312 D	OM 602.980	6010500924	9.0	14.03	37.5	F-1	G
8066.600	EX	Sprinter 3-t Furgonato 312 D	OM 602.980	6010501124	9.0	14.03	37.5	F-1	G
8161.604	IN-EX	SPRINTER 3-t Kasten (903), 308	OM 611.987	05080044AB	7.0	12.56	37.5	F	S03
8168.600	IN	SPRINTER 3-t Kasten (903), 308	OM 601.943	6010500624	8.0	14.03	39.5	F-1	G
8168.600	IN	SPRINTER 3-t Kasten (903), 308	OM 601.943	6010500624	8.0	14.03	39.5	F-1	G
8168.600	IN	SPRINTER 3-t Kasten (903), 308	OM 601.943	6010500824	8.0	14.03	39.5	F-1	G
8168.600	IN	SPRINTER 3-t Kasten (903), 308	OM 601.943	6010500824	8.0	14.03	39.5	F-1	G
8168.600	IN	SPRINTER 3-t Kasten (903), 310	OM 602.980	6010500624	8.0	14.03	39.5	F-1	G
8168.600	IN	SPRINTER 3-t Kasten (903), 310	OM 602.980	6010500824	8.0	14.03	39.5	F-1	G
8161.604	IN-EX	SPRINTER 3-t Kasten (903), 311	OM 611.981	05080044AB	7.0	12.56	37.5	F	S03
8161.604	IN-EX	SPRINTER 3-t Kasten (903), 311	OM 611.981	05080044AB	7.0	12.56	37.5	F	S03
8168.600	IN	SPRINTER 3-t Kasten (903), 312	OM 602.980	6010500624	8.0	14.03	39.5	F-1	G
8168.600	IN	SPRINTER 3-t Kasten (903), 312	OM 602.980	6010500824	8.0	14.03	39.5	F-1	G
8168.600	IN	SPRINTER 3-t Kasten (903), 312	OM 602.980	6010500624	8.0	14.03	39.5	F-1	G
8168.600	IN	SPRINTER 3-t Kasten (903), 312	OM 602.980	6010500824	8.0	14.03	39.5	F-1	G
8161.604	IN-EX	SPRINTER 3-t Kasten (903), 313	OM 611.981	05080044AB	7.0	12.56	37.5	F	S03
8161.604	IN-EX	SPRINTER 3-t Kasten (903), 313	OM 611.981	05080044AB	7.0	12.56	37.5	F	S03
8185.600	IN-EX	SPRINTER 3-t Kasten (903), 314	M 111.979/M 111.984	1110531029	7.0	12.56	37.5	F	G1
8185.600	IN-EX	SPRINTER 3-t Kasten (903), 314	M 111.979/M 111.984	6060530230	7.0	12.56	37.5	F	G1
8185.600	IN-EX	SPRINTER 3-t Kasten (903), 314	M 111.984	1110531029	7.0	12.56	37.5	F	G1
8185.600	IN-EX	SPRINTER 3-t Kasten (903), 314	M 111.984	6060530230	7.0	12.56	37.5	F	G1
8161.604	IN-EX	SPRINTER 3-t Kasten (903), 316	OM 612.981	05080044AB	7.0	12.56	37.5	F	S03
8161.604	IN-EX	SPRINTER 3-t Kasten (903), 316	OM 612.981	05080044AB	7.0	12.56	37.5	F	S03
8161.604	IN-EX	SPRINTER 3-t Kasten (906), 209	OM 646.984	05080044AB	7.0	12.56	37.5	F	S03
8161.604	IN-EX	SPRINTER 3-t Kasten (906), 211	OM 646.985	05080044AB	7.0	12.56	37.5	F	S03
8161.604	IN-EX	SPRINTER 3-t Kasten (906), 213	OM 646.986	05080044AB	7.0	12.56	37.5	F	S03
8161.604	IN-EX	SPRINTER 3-t Kasten (906), 213	OM 651.956/OM 651.955	05080044AB	7.0	12.56	37.5	F	S03
8161.604	IN-EX	SPRINTER 3-t Kasten (906), 215	OM 646.990/OM 646.989	05080044AB	7.0	12.56	37.5	F	S03
8161.604	IN-EX	SPRINTER 3-t Pritsche/Fahrgeste	OM 611.987	05080044AB	7.0	12.56	37.5	F	S03
8168.600	IN	SPRINTER 3-t Pritsche/Fahrgeste	OM 601.943	6010500624	8.0	14.03	39.5	F-1	G
8168.600	IN	SPRINTER 3-t Pritsche/Fahrgeste	OM 601.943	6010500624	8.0	14.03	39.5	F-1	G

(D1) Internal diameter, (D2) External diameter, (B) Shape, (C) Material

VALVE GUIDES

MERCEDES BENZ

IVT Ref.	Type	Model	Engine	OEM Ref.	D1	D2	Length	B	C
8168.600	IN	SPRINTER 3-t Pritsche/Fahrgeste	OM 601.943	6010500824	8.0	14.03	39.5	F-1	G
8168.600	IN	SPRINTER 3-t Pritsche/Fahrgeste	OM 601.943	6010500824	8.0	14.03	39.5	F-1	G
8168.600	IN	SPRINTER 3-t Pritsche/Fahrgeste	OM 602.980	6010500624	8.0	14.03	39.5	F-1	G
8168.600	IN	SPRINTER 3-t Pritsche/Fahrgeste	OM 602.980	6010500824	8.0	14.03	39.5	F-1	G
8161.604	IN-EX	SPRINTER 3-t Pritsche/Fahrgeste	OM 611.981	05080044AB	7.0	12.56	37.5	F	S03
8161.604	IN-EX	SPRINTER 3-t Pritsche/Fahrgeste	OM 611.981	05080044AB	7.0	12.56	37.5	F	S03
8168.600	IN	SPRINTER 3-t Pritsche/Fahrgeste	OM 602.980	6010500624	8.0	14.03	39.5	F-1	G
8168.600	IN	SPRINTER 3-t Pritsche/Fahrgeste	OM 602.980	6010500824	8.0	14.03	39.5	F-1	G
8161.604	IN-EX	SPRINTER 3-t Pritsche/Fahrgeste	OM 611.981	05080044AB	7.0	12.56	37.5	F	S03
8161.604	IN-EX	SPRINTER 3-t Pritsche/Fahrgeste	OM 611.981	05080044AB	7.0	12.56	37.5	F	S03
8185.600	IN-EX	SPRINTER 3-t Pritsche/Fahrgeste	M 111.984	1110531029	7.0	12.56	37.5	F	G1
8185.600	IN-EX	SPRINTER 3-t Pritsche/Fahrgeste	M 111.984	6060530230	7.0	12.56	37.5	F	G1
8185.600	IN-EX	SPRINTER 3-t Pritsche/Fahrgeste	M 111.984	1110531029	7.0	12.56	37.5	F	G1
8185.600	IN-EX	SPRINTER 3-t Pritsche/Fahrgeste	M 111.984	6060530230	7.0	12.56	37.5	F	G1
8161.604	IN-EX	SPRINTER 3-t Pritsche/Fahrgeste	OM 612.981	05080044AB	7.0	12.56	37.5	F	S03
8161.604	IN-EX	SPRINTER 3-t Pritsche/Fahrgeste	OM 612.981	05080044AB	7.0	12.56	37.5	F	S03
8161.604	IN-EX	SPRINTER 3-t Pritsche/Fahrgeste	OM 646.984	05080044AB	7.0	12.56	37.5	F	S03
8161.604	IN-EX	SPRINTER 3-t Pritsche/Fahrgeste	OM 646.985	05080044AB	7.0	12.56	37.5	F	S03
8161.604	IN-EX	SPRINTER 3-t Pritsche/Fahrgeste	OM 646.986	05080044AB	7.0	12.56	37.5	F	S03
8161.604	IN-EX	SPRINTER 3-t Pritsche/Fahrgeste	OM 651.956	05080044AB	7.0	12.56	37.5	F	S03
8161.604	IN-EX	SPRINTER 3-t Pritsche/Fahrgeste	OM 646.990/OM 646.989	05080044AB	7.0	12.56	37.5	F	S03
8161.604	IN-EX	SPRINTER 4,6-t Kasten (906), 41	OM 646.985	05080044AB	7.0	12.56	37.5	F	S03
8161.604	IN-EX	SPRINTER 4,6-t Kasten (906), 41	OM 646.986	05080044AB	7.0	12.56	37.5	F	S03
8161.604	IN-EX	SPRINTER 4,6-t Kasten (906), 41	OM 646.990/OM 646.989	05080044AB	7.0	12.56	37.5	F	S03
8161.604	IN-EX	SPRINTER 4,6-t Pritsche/Fahrges	OM 646.985	05080044AB	7.0	12.56	37.5	F	S03
8161.604	IN-EX	SPRINTER 4,6-t Pritsche/Fahrges	OM 646.986	05080044AB	7.0	12.56	37.5	F	S03
8161.604	IN-EX	SPRINTER 4,6-t Pritsche/Fahrges	OM 646.990/OM 646.989	05080044AB	7.0	12.56	37.5	F	S03
8066.600	EX	Sprinter 4-t 408 D	OM 601.943	6010500924	9.0	14.03	37.5	F-1	G
8066.600	EX	Sprinter 4-t 408 D	OM 601.943	6010501124	9.0	14.03	37.5	F-1	G
8066.600	EX	Sprinter 4-t 410 D	OM 602.980	6010500924	9.0	14.03	37.5	F-1	G
8066.600	EX	Sprinter 4-t 410 D	OM 602.980	6010501124	9.0	14.03	37.5	F-1	G
8066.600	EX	Sprinter 4-t 412 D	OM 602.980	6010500924	9.0	14.03	37.5	F-1	G
8066.600	EX	Sprinter 4-t 412 D	OM 602.980	6010501124	9.0	14.03	37.5	F-1	G
8066.600	EX	Sprinter 4-t 412 D 4x4	OM 602.980	6010500924	9.0	14.03	37.5	F-1	G
8066.600	EX	Sprinter 4-t 412 D 4x4	OM 602.980	6010501124	9.0	14.03	37.5	F-1	G
8161.604	IN-EX	SPRINTER 4-t Bus (904), 408 CDI	OM 611.987	05080044AB	7.0	12.56	37.5	F	S03
8161.604	IN-EX	SPRINTER 4-t Bus (904), 411 CDI	OM 611.981	05080044AB	7.0	12.56	37.5	F	S03
8161.604	IN-EX	SPRINTER 4-t Bus (904), 413 CDI	OM 611.981	05080044AB	7.0	12.56	37.5	F	S03
8185.600	IN-EX	SPRINTER 4-t Bus (904), 414	M 111.979	1110531029	7.0	12.56	37.5	F	G1
8185.600	IN-EX	SPRINTER 4-t Bus (904), 414	M 111.979	6060530230	7.0	12.56	37.5	F	G1
8161.604	IN-EX	SPRINTER 4-t Bus (904), 416 CDI	OM 612.981	05080044AB	7.0	12.56	37.5	F	S03
8066.600	EX	Sprinter 4-t Furgonato 408 D	OM 601.943	6010500924	9.0	14.03	37.5	F-1	G
8066.600	EX	Sprinter 4-t Furgonato 408 D	OM 601.943	6010501124	9.0	14.03	37.5	F-1	G
8066.600	EX	Sprinter 4-t Furgonato 410 D	OM 602.980	6010500924	9.0	14.03	37.5	F-1	G
8066.600	EX	Sprinter 4-t Furgonato 410 D	OM 602.980	6010501124	9.0	14.03	37.5	F-1	G
8066.600	EX	Sprinter 4-t Furgonato 410 D 4x4	OM 602.980	6010500924	9.0	14.03	37.5	F-1	G
8066.600	EX	Sprinter 4-t Furgonato 410 D 4x4	OM 602.980	6010501124	9.0	14.03	37.5	F-1	G
8066.600	EX	Sprinter 4-t Furgonato 412 D	OM 602.980	6010500924	9.0	14.03	37.5	F-1	G
8066.600	EX	Sprinter 4-t Furgonato 412 D	OM 602.980	6010501124	9.0	14.03	37.5	F-1	G
8066.600	EX	Sprinter 4-t Furgonato 412 D 4x4	OM 602.980	6010500924	9.0	14.03	37.5	F-1	G
8066.600	EX	Sprinter 4-t Furgonato 412 D 4x4	OM 602.980	6010501124	9.0	14.03	37.5	F-1	G
8161.604	IN-EX	SPRINTER 4-t Kasten (904), 408	OM 611.987	05080044AB	7.0	12.56	37.5	F	S03
8168.600	IN	SPRINTER 4-t Kasten (904), 408	OM 601.943	6010500624	8.0	14.03	39.5	F-1	G
8168.600	IN	SPRINTER 4-t Kasten (904), 408	OM 601.943	6010500824	8.0	14.03	39.5	F-1	G
8168.600	IN	SPRINTER 4-t Kasten (904), 410	OM 602.980	6010500624	8.0	14.03	39.5	F-1	G
8168.600	IN	SPRINTER 4-t Kasten (904), 410	OM 602.980	6010500824	8.0	14.03	39.5	F-1	G
8168.600	IN	SPRINTER 4-t Kasten (904), 410	OM 602.980	6010500624	8.0	14.03	39.5	F-1	G
8168.600	IN	SPRINTER 4-t Kasten (904), 410	OM 602.980	6010500824	8.0	14.03	39.5	F-1	G
8161.604	IN-EX	SPRINTER 4-t Kasten (904), 411	OM 611.981	05080044AB	7.0	12.56	37.5	F	S03
8161.604	IN-EX	SPRINTER 4-t Kasten (904), 411	OM 611.981	05080044AB	7.0	12.56	37.5	F	S03
8168.600	IN	SPRINTER 4-t Kasten (904), 412	OM 602.980	6010500624	8.0	14.03	39.5	F-1	G
8168.600	IN	SPRINTER 4-t Kasten (904), 412	OM 602.980	6010500624	8.0	14.03	39.5	F-1	G

(D1) Internal diameter, (D2) External diameter, (B) Shape, (C) Material

VALVE GUIDES

MERCEDES BENZ

IVT Ref.	Type	Model	Engine	OEM Ref.	D1	D2	Length	B	C
8168.600	IN	SPRINTER 4-t Kasten (904), 412	OM 602.980	6010500824	8.0	14.03	39.5	F-1	G
8168.600	IN	SPRINTER 4-t Kasten (904), 412	OM 602.980	6010500824	8.0	14.03	39.5	F-1	G
8168.600	IN	SPRINTER 4-t Kasten (904), 412	OM 602.980	6010500624	8.0	14.03	39.5	F-1	G
8168.600	IN	SPRINTER 4-t Kasten (904), 412	OM 602.980	6010500624	8.0	14.03	39.5	F-1	G
8168.600	IN	SPRINTER 4-t Kasten (904), 412	OM 602.980	6010500824	8.0	14.03	39.5	F-1	G
8168.600	IN	SPRINTER 4-t Kasten (904), 412	OM 602.980	6010500824	8.0	14.03	39.5	F-1	G
8161.604	IN-EX	SPRINTER 4-t Kasten (904), 413	OM 611.981	05080044AB	7.0	12.56	37.5	F	S03
8161.604	IN-EX	SPRINTER 4-t Kasten (904), 413	OM 611.981	05080044AB	7.0	12.56	37.5	F	S03
8185.600	IN-EX	SPRINTER 4-t Kasten (904), 414	M 111.979	1110531029	7.0	12.56	37.5	F	G1
8185.600	IN-EX	SPRINTER 4-t Kasten (904), 414	M 111.979	6060530230	7.0	12.56	37.5	F	G1
8185.600	IN-EX	SPRINTER 4-t Kasten (904), 414	M 111.979	1110531029	7.0	12.56	37.5	F	G1
8185.600	IN-EX	SPRINTER 4-t Kasten (904), 414	M 111.979	6060530230	7.0	12.56	37.5	F	G1
8161.604	IN-EX	SPRINTER 4-t Kasten (904), 416	OM 612.981	05080044AB	7.0	12.56	37.5	F	S03
8161.604	IN-EX	SPRINTER 4-t Kasten (904), 416	OM 612.981	05080044AB	7.0	12.56	37.5	F	S03
8161.604	IN-EX	SPRINTER 4-t Pritsche/Fahrgeste	OM 611.987	05080044AB	7.0	12.56	37.5	F	S03
8168.600	IN	SPRINTER 4-t Pritsche/Fahrgeste	OM 601.943	6010500624	8.0	14.03	39.5	F-1	G
8168.600	IN	SPRINTER 4-t Pritsche/Fahrgeste	OM 601.943	6010500824	8.0	14.03	39.5	F-1	G
8168.600	IN	SPRINTER 4-t Pritsche/Fahrgeste	OM 602.980	6010500624	8.0	14.03	39.5	F-1	G
8168.600	IN	SPRINTER 4-t Pritsche/Fahrgeste	OM 602.980	6010500824	8.0	14.03	39.5	F-1	G
8168.600	IN	SPRINTER 4-t Pritsche/Fahrgeste	OM 602.980	6010500624	8.0	14.03	39.5	F-1	G
8168.600	IN	SPRINTER 4-t Pritsche/Fahrgeste	OM 602.980	6010500824	8.0	14.03	39.5	F-1	G
8161.604	IN-EX	SPRINTER 4-t Pritsche/Fahrgeste	OM 611.981	05080044AB	7.0	12.56	37.5	F	S03
8161.604	IN-EX	SPRINTER 4-t Pritsche/Fahrgeste	OM 611.981	05080044AB	7.0	12.56	37.5	F	S03
8168.600	IN	SPRINTER 4-t Pritsche/Fahrgeste	OM 602.980	6010500624	8.0	14.03	39.5	F-1	G
8168.600	IN	SPRINTER 4-t Pritsche/Fahrgeste	OM 602.980	6010500624	8.0	14.03	39.5	F-1	G
8168.600	IN	SPRINTER 4-t Pritsche/Fahrgeste	OM 602.980	6010500824	8.0	14.03	39.5	F-1	G
8168.600	IN	SPRINTER 4-t Pritsche/Fahrgeste	OM 602.980	6010500824	8.0	14.03	39.5	F-1	G
8168.600	IN	SPRINTER 4-t Pritsche/Fahrgeste	OM 602.980	6010500624	8.0	14.03	39.5	F-1	G
8168.600	IN	SPRINTER 4-t Pritsche/Fahrgeste	OM 602.980	6010500624	8.0	14.03	39.5	F-1	G
8168.600	IN	SPRINTER 4-t Pritsche/Fahrgeste	OM 602.980	6010500824	8.0	14.03	39.5	F-1	G
8168.600	IN	SPRINTER 4-t Pritsche/Fahrgeste	OM 602.980	6010500824	8.0	14.03	39.5	F-1	G
8161.604	IN-EX	SPRINTER 4-t Pritsche/Fahrgeste	OM 611.981	05080044AB	7.0	12.56	37.5	F	S03
8161.604	IN-EX	SPRINTER 4-t Pritsche/Fahrgeste	OM 611.981	05080044AB	7.0	12.56	37.5	F	S03
8185.600	IN-EX	SPRINTER 4-t Pritsche/Fahrgeste	M 111.979	1110531029	7.0	12.56	37.5	F	G1
8185.600	IN-EX	SPRINTER 4-t Pritsche/Fahrgeste	M 111.979	6060530230	7.0	12.56	37.5	F	G1
8185.600	IN-EX	SPRINTER 4-t Pritsche/Fahrgeste	M 111.979	1110531029	7.0	12.56	37.5	F	G1
8185.600	IN-EX	SPRINTER 4-t Pritsche/Fahrgeste	M 111.979	6060530230	7.0	12.56	37.5	F	G1
8161.604	IN-EX	SPRINTER 4-t Pritsche/Fahrgeste	OM 612.981	05080044AB	7.0	12.56	37.5	F	S03
8161.604	IN-EX	SPRINTER 4-t Pritsche/Fahrgeste	OM 612.981	05080044AB	7.0	12.56	37.5	F	S03
8161.604	IN-EX	SPRINTER 5-t Kasten (906), 509	OM 646.984	05080044AB	7.0	12.56	37.5	F	S03
8161.604	IN-EX	SPRINTER 5-t Kasten (906), 511	OM 646.985	05080044AB	7.0	12.56	37.5	F	S03
8161.604	IN-EX	SPRINTER 5-t Kasten (906), 511	OM 646.985	05080044AB	7.0	12.56	37.5	F	S03
8161.604	IN-EX	SPRINTER 5-t Kasten (906), 513	OM 646.986	05080044AB	7.0	12.56	37.5	F	S03
8161.604	IN-EX	SPRINTER 5-t Kasten (906), 515	OM 646.990/OM 646.986/OM	05080044AB	7.0	12.56	37.5	F	S03
8161.604	IN-EX	SPRINTER 5-t Kasten (906), 515	OM 646.990/OM 646.989	05080044AB	7.0	12.56	37.5	F	S03
8161.604	IN-EX	SPRINTER 5-t Pritsche/Fahrgeste	OM 646.984	05080044AB	7.0	12.56	37.5	F	S03
8161.604	IN-EX	SPRINTER 5-t Pritsche/Fahrgeste	OM 646.985	05080044AB	7.0	12.56	37.5	F	S03
8161.604	IN-EX	SPRINTER 5-t Pritsche/Fahrgeste	OM 646.985	05080044AB	7.0	12.56	37.5	F	S03
8161.604	IN-EX	SPRINTER 5-t Pritsche/Fahrgeste	OM 646.986	05080044AB	7.0	12.56	37.5	F	S03
8161.604	IN-EX	SPRINTER 5-t Pritsche/Fahrgeste	OM 646.990/OM 646.989	05080044AB	7.0	12.56	37.5	F	S03
8161.604	IN-EX	SPRINTER 5-t Pritsche/Fahrgeste	OM 646.990/OM 646.989	05080044AB	7.0	12.56	37.5	F	S03
8168.600	IN	Stufenheck (W124), 200 D (124.1	OM 601.912	6010500624	8.0	14.03	39.5	F-1	G
8168.600	IN	Stufenheck (W124), 200 D (124.1	OM 601.912	6010500624	8.0	14.03	39.5	F-1	G
8168.600	IN	Stufenheck (W124), 200 D (124.1	OM 601.912	6010500824	8.0	14.03	39.5	F-1	G
8168.600	IN	Stufenheck (W124), 200 D (124.1	OM 601.912	6010500824	8.0	14.03	39.5	F-1	G
8185.600	IN-EX	Stufenheck (W124), 200 E (124.0	M 111.940	1110531029	7.0	12.56	37.5	F	G1
8185.600	IN-EX	Stufenheck (W124), 200 E (124.0	M 111.940	6060530230	7.0	12.56	37.5	F	G1
8185.600	IN-EX	Stufenheck (W124), 220 E (124.0	M 111.960	1110531029	7.0	12.56	37.5	F	G1
8185.600	IN-EX	Stufenheck (W124), 220 E (124.0	M 111.960	6060530230	7.0	12.56	37.5	F	G1
8168.600	IN	Stufenheck (W124), 250 D (124.1	OM 602.912	6010500624	8.0	14.03	39.5	F-1	G
8168.600	IN	Stufenheck (W124), 250 D (124.1	OM 602.912	6010500624	8.0	14.03	39.5	F-1	G
8168.600	IN	Stufenheck (W124), 250 D (124.1	OM 602.912	6010500824	8.0	14.03	39.5	F-1	G

(D1) Internal diameter, (D2) External diameter, (B) Shape, (C) Material

VALVE GUIDES

MERCEDES BENZ

IVT Ref.	Type	Model	Engine	OEM Ref.	D1	D2	Length	B	C
8168.600	IN	Stufenheck (W124), 250 D (124.1	OM 602.912	6010500824	8.0	14.03	39.5	F-1	G
8168.600	IN	Stufenheck (W124), 250 Turbo-D (	OM 602.962	6010500624	8.0	14.03	39.5	F-1	G
8168.600	IN	Stufenheck (W124), 250 Turbo-D (	OM 602.962	6010500824	8.0	14.03	39.5	F-1	G
8185.600	IN-EX	Stufenheck (W124), 280 E (124.0	M 104.942	1110531029	7.0	12.56	37.5	F	G1
8185.600	IN-EX	Stufenheck (W124), 280 E (124.0	M 104.942	6060530230	7.0	12.56	37.5	F	G1
8168.600	IN	Stufenheck (W124), 300 D (124.1	OM 603.912	6010500624	8.0	14.03	39.5	F-1	G
8168.600	IN	Stufenheck (W124), 300 D (124.1	OM 603.912	6010500624	8.0	14.03	39.5	F-1	G
8168.600	IN	Stufenheck (W124), 300 D (124.1	OM 603.912	6010500624	8.0	14.03	39.5	F-1	G
8168.600	IN	Stufenheck (W124), 300 D (124.1	OM 603.912	6010500824	8.0	14.03	39.5	F-1	G
8168.600	IN	Stufenheck (W124), 300 D (124.1	OM 603.912	6010500824	8.0	14.03	39.5	F-1	G
8168.600	IN	Stufenheck (W124), 300 D (124.1	OM 603.912	6010500824	8.0	14.03	39.5	F-1	G
8168.600	IN	Stufenheck (W124), 300 D 4-matic	OM 603.913	6010500624	8.0	14.03	39.5	F-1	G
8168.600	IN	Stufenheck (W124), 300 D 4-matic	OM 603.913	6010500624	8.0	14.03	39.5	F-1	G
8168.600	IN	Stufenheck (W124), 300 D 4-matic	OM 603.913	6010500824	8.0	14.03	39.5	F-1	G
8168.600	IN	Stufenheck (W124), 300 D 4-matic	OM 603.913	6010500824	8.0	14.03	39.5	F-1	G
8168.600	IN	Stufenheck (W124), 300 Turbo-D (	OM 603.960	6010500624	8.0	14.03	39.5	F-1	G
8168.600	IN	Stufenheck (W124), 300 Turbo-D (	OM 603.960	6010500824	8.0	14.03	39.5	F-1	G
8168.600	IN	Stufenheck (W124), 300 Turbo-D (	OM 603.960/OM 603.963	6010500624	8.0	14.03	39.5	F-1	G
8168.600	IN	Stufenheck (W124), 300 Turbo-D (	OM 603.960/OM 603.963	6010500824	8.0	14.03	39.5	F-1	G
8168.600	IN	Stufenheck (W124), 300 Turbo-D	OM 603.960/OM 603.963	6010500624	8.0	14.03	39.5	F-1	G
8168.600	IN	Stufenheck (W124), 300 Turbo-D	OM 603.960/OM 603.963	6010500824	8.0	14.03	39.5	F-1	G
8168.600	IN	Stufenheck (W124), 300 Turbo-D	OM 603.963	6010500624	8.0	14.03	39.5	F-1	G
8168.600	IN	Stufenheck (W124), 300 Turbo-D	OM 603.963	6010500824	8.0	14.03	39.5	F-1	G
8185.600	IN-EX	Stufenheck (W124), 320 E (124.0	M 104.992	1110531029	7.0	12.56	37.5	F	G1
8185.600	IN-EX	Stufenheck (W124), 320 E (124.0	M 104.992	6060530230	7.0	12.56	37.5	F	G1
8185.600	IN-EX	Stufenheck (W124), 500 E AMG 6	-	1110531029	7.0	12.56	37.5	F	G1
8185.600	IN-EX	Stufenheck (W124), 500 E AMG 6	-	6060530230	7.0	12.56	37.5	F	G1
8066.600	EX	T1 208 D 2.3	OM 601.940	6010500924	9.0	14.03	37.5	F-1	G
8066.600	EX	T1 208 D 2.3	OM 601.940	6010501124	9.0	14.03	37.5	F-1	G
8066.600	EX	T1 210 D 2.8	OM 602.940	6010500924	9.0	14.03	37.5	F-1	G
8066.600	EX	T1 210 D 2.8	OM 602.940	6010501124	9.0	14.03	37.5	F-1	G
8066.600	EX	T1 308 D 2.3	OM 601.940	6010500924	9.0	14.03	37.5	F-1	G
8066.600	EX	T1 308 D 2.3	OM 601.940	6010501124	9.0	14.03	37.5	F-1	G
8066.600	EX	T1 310 D 2.9	OM 602.940	6010500924	9.0	14.03	37.5	F-1	G
8066.600	EX	T1 310 D 2.9	OM 602.940	6010501124	9.0	14.03	37.5	F-1	G
8066.600	EX	T1 Autobus 208 D 2.3	OM 601.940	6010500924	9.0	14.03	37.5	F-1	G
8066.600	EX	T1 Autobus 208 D 2.3	OM 601.940	6010501124	9.0	14.03	37.5	F-1	G
8066.600	EX	T1 Autobus 210 D 2.8	OM 602.940	6010500924	9.0	14.03	37.5	F-1	G
8066.600	EX	T1 Autobus 210 D 2.8	OM 602.940	6010501124	9.0	14.03	37.5	F-1	G
8066.600	EX	T1 Autobus 308 D 2.3	OM 601.940	6010500924	9.0	14.03	37.5	F-1	G
8066.600	EX	T1 Autobus 308 D 2.3	OM 601.940	6010501124	9.0	14.03	37.5	F-1	G
8066.600	EX	T1 Autobus 310 D 2.9	OM 602.940	6010500924	9.0	14.03	37.5	F-1	G
8066.600	EX	T1 Autobus 310 D 2.9	OM 602.940	6010501124	9.0	14.03	37.5	F-1	G
8168.600	IN	T1 Bus (601), 208 D 2.3	OM 601.940	6010500624	8.0	14.03	39.5	F-1	G
8168.600	IN	T1 Bus (601), 208 D 2.3	OM 601.940	6010500624	8.0	14.03	39.5	F-1	G
8168.600	IN	T1 Bus (601), 208 D 2.3	OM 601.940	6010500824	8.0	14.03	39.5	F-1	G
8168.600	IN	T1 Bus (601), 208 D 2.3	OM 601.940	6010500824	8.0	14.03	39.5	F-1	G
8168.600	IN	T1 Bus (601), 210 D 2.8	OM 602.940	6010500624	8.0	14.03	39.5	F-1	G
8168.600	IN	T1 Bus (601), 210 D 2.8	OM 602.940	6010500624	8.0	14.03	39.5	F-1	G
8168.600	IN	T1 Bus (601), 210 D 2.8	OM 602.940	6010500824	8.0	14.03	39.5	F-1	G
8168.600	IN	T1 Bus (601), 210 D 2.8	OM 602.940	6010500824	8.0	14.03	39.5	F-1	G
8168.600	IN	T1 Bus (602), 308 D 2.3	OM 601.940	6010500624	8.0	14.03	39.5	F-1	G
8168.600	IN	T1 Bus (602), 308 D 2.3	OM 601.940	6010500624	8.0	14.03	39.5	F-1	G
8168.600	IN	T1 Bus (602), 308 D 2.3	OM 601.940	6010500824	8.0	14.03	39.5	F-1	G
8168.600	IN	T1 Bus (602), 308 D 2.3	OM 601.940	6010500824	8.0	14.03	39.5	F-1	G
8168.600	IN	T1 Bus (602), 310 D 2.9	OM 602.940	6010500624	8.0	14.03	39.5	F-1	G
8168.600	IN	T1 Bus (602), 310 D 2.9	OM 602.940	6010500624	8.0	14.03	39.5	F-1	G
8168.600	IN	T1 Bus (602), 310 D 2.9	OM 602.940	6010500824	8.0	14.03	39.5	F-1	G
8168.600	IN	T1 Bus (602), 310 D 2.9	OM 602.940	6010500824	8.0	14.03	39.5	F-1	G
8066.600	EX	T1 Furgonato 208 D 2.3	OM 601.940	6010500924	9.0	14.03	37.5	F-1	G
8066.600	EX	T1 Furgonato 208 D 2.3	OM 601.940	6010501124	9.0	14.03	37.5	F-1	G
8066.600	EX	T1 Furgonato 210 D 2.8	OM 602.940	6010500924	9.0	14.03	37.5	F-1	G

(D1) Internal diameter, (D2) External diameter, (B) Shape, (C) Material

VALVE GUIDES

MERCEDES BENZ

IVT Ref.	Type	Model	Engine	OEM Ref.	D1	D2	Length	B	C
8066.600	EX	T1 Furgonato 210 D 2.8	OM 602.940	6010501124	9.0	14.03	37.5	F-1	G
8066.600	EX	T1 Furgonato 308 D 2.3	OM 601.940	6010500924	9.0	14.03	37.5	F-1	G
8066.600	EX	T1 Furgonato 308 D 2.3	OM 601.940	6010501124	9.0	14.03	37.5	F-1	G
8066.600	EX	T1 Furgonato 310 D 2.9	OM 602.940	6010500924	9.0	14.03	37.5	F-1	G
8066.600	EX	T1 Furgonato 310 D 2.9	OM 602.940	6010501124	9.0	14.03	37.5	F-1	G
8168.600	IN	T1 Kasten (601), 208 D 2.3	OM 601.940	6010500624	8.0	14.03	39.5	F-1	G
8168.600	IN	T1 Kasten (601), 208 D 2.3	OM 601.940	6010500624	8.0	14.03	39.5	F-1	G
8168.600	IN	T1 Kasten (601), 208 D 2.3	OM 601.940	6010500824	8.0	14.03	39.5	F-1	G
8168.600	IN	T1 Kasten (601), 208 D 2.3	OM 601.940	6010500824	8.0	14.03	39.5	F-1	G
8168.600	IN	T1 Kasten (601), 210 D 2.8	OM 602.940	6010500624	8.0	14.03	39.5	F-1	G
8168.600	IN	T1 Kasten (601), 210 D 2.8	OM 602.940	6010500624	8.0	14.03	39.5	F-1	G
8168.600	IN	T1 Kasten (601), 210 D 2.8	OM 602.940	6010500824	8.0	14.03	39.5	F-1	G
8168.600	IN	T1 Kasten (601), 210 D 2.8	OM 602.940	6010500824	8.0	14.03	39.5	F-1	G
8168.600	IN	T1 Kasten (602), 308 D 2.3	OM 601.940	6010500624	8.0	14.03	39.5	F-1	G
8168.600	IN	T1 Kasten (602), 308 D 2.3	OM 601.940	6010500624	8.0	14.03	39.5	F-1	G
8168.600	IN	T1 Kasten (602), 308 D 2.3	OM 601.940	6010500824	8.0	14.03	39.5	F-1	G
8168.600	IN	T1 Kasten (602), 308 D 2.3	OM 601.940	6010500824	8.0	14.03	39.5	F-1	G
8168.600	IN	T1 Kasten (602), 310 D 2.9	OM 602.940	6010500624	8.0	14.03	39.5	F-1	G
8168.600	IN	T1 Kasten (602), 310 D 2.9	OM 602.940	6010500624	8.0	14.03	39.5	F-1	G
8168.600	IN	T1 Kasten (602), 310 D 2.9	OM 602.940	6010500824	8.0	14.03	39.5	F-1	G
8168.600	IN	T1 Kasten (602), 310 D 2.9	OM 602.940	6010500824	8.0	14.03	39.5	F-1	G
8168.600	IN	T1 Pritsche/Fahrgestell (601), 208	OM 601.940	6010500624	8.0	14.03	39.5	F-1	G
8168.600	IN	T1 Pritsche/Fahrgestell (601), 208	OM 601.940	6010500624	8.0	14.03	39.5	F-1	G
8168.600	IN	T1 Pritsche/Fahrgestell (601), 208	OM 601.940	6010500824	8.0	14.03	39.5	F-1	G
8168.600	IN	T1 Pritsche/Fahrgestell (601), 208	OM 601.940	6010500824	8.0	14.03	39.5	F-1	G
8168.600	IN	T1 Pritsche/Fahrgestell (601), 210	OM 602.940	6010500624	8.0	14.03	39.5	F-1	G
8168.600	IN	T1 Pritsche/Fahrgestell (601), 210	OM 602.940	6010500824	8.0	14.03	39.5	F-1	G
8168.600	IN	T1 Pritsche/Fahrgestell (601), 210	OM 602.940	6010500624	8.0	14.03	39.5	F-1	G
8168.600	IN	T1 Pritsche/Fahrgestell (601), 210	OM 602.940	6010500824	8.0	14.03	39.5	F-1	G
8168.600	IN	T1 Pritsche/Fahrgestell (602), 308	OM 601.940	6010500624	8.0	14.03	39.5	F-1	G
8168.600	IN	T1 Pritsche/Fahrgestell (602), 308	OM 601.940	6010500624	8.0	14.03	39.5	F-1	G
8168.600	IN	T1 Pritsche/Fahrgestell (602), 308	OM 601.940	6010500824	8.0	14.03	39.5	F-1	G
8168.600	IN	T1 Pritsche/Fahrgestell (602), 308	OM 601.940	6010500824	8.0	14.03	39.5	F-1	G
8168.600	IN	T1 Pritsche/Fahrgestell (602), 310	OM 602.940	6010500624	8.0	14.03	39.5	F-1	G
8168.600	IN	T1 Pritsche/Fahrgestell (602), 310	OM 602.940	6010500624	8.0	14.03	39.5	F-1	G
8168.600	IN	T1 Pritsche/Fahrgestell (602), 310	OM 602.940	6010500824	8.0	14.03	39.5	F-1	G
8168.600	IN	T1 Pritsche/Fahrgestell (602), 310	OM 602.940	6010500824	8.0	14.03	39.5	F-1	G
8012.600	IN-EX	Tourismo RHD,SHD	OM 457.944	5410531230	9.0	15.03	61.0	F	G1
8012.600	IN-EX	Travego 15 RH,RHD	OM 457.936	5410531230	9.0	15.03	61.0	F	G1
8012.600	IN-EX	Travego 15 RH,RHD	OM 457.938	5410531230	9.0	15.03	61.0	F	G1
8012.600	IN-EX	Travego 16 RHD	OM 457.944	5410531230	9.0	15.03	61.0	F	G1
8012.600	IN-EX	Travego 17 RHD	OM 457.944	5410531230	9.0	15.03	61.0	F	G1
8012.600	IN-EX	Travego 17 RHD	OM 542.948	5410531230	9.0	15.03	61.0	F	G1
8075.600	IN-EX	Truck Engines	OM401 A D	4030530030	12.0	18.04	67.0	F	G1
8075.600	IN-EX	Truck Engines	OM401 A D	4220530430	12.0	18.04	67.0	F	G1
8075.600	IN-EX	Truck Engines	OM401 A-LA D	4030530030	12.0	18.04	67.0	F	G1
8075.600	IN-EX	Truck Engines	OM401 A-LA D	4220530430	12.0	18.04	67.0	F	G1
8075.600	IN-EX	Truck Engines	OM401 LA D	4030530030	12.0	18.04	67.0	F	G1
8075.600	IN-EX	Truck Engines	OM401 LA D	4220530430	12.0	18.04	67.0	F	G1
8075.600	IN-EX	Truck Engines	OM402 A-LA D	4030530030	12.0	18.04	67.0	F	G1
8075.600	IN-EX	Truck Engines	OM402 A-LA D	4220530430	12.0	18.04	67.0	F	G1
8075.600	IN-EX	Truck Engines	OM422	4030530030	12.0	18.04	67.0	F	G1
8075.600	IN-EX	Truck Engines	OM422	4220530430	12.0	18.04	67.0	F	G1
8075.600	IN-EX	Truck Engines	OM422 A-LA D	4030530030	12.0	18.04	67.0	F	G1
8075.600	IN-EX	Truck Engines	OM422 A-LA D	4220530430	12.0	18.04	67.0	F	G1
8075.600	IN-EX	Truck Engines	OM423 A-LA	4030530030	12.0	18.04	67.0	F	G1
8075.600	IN-EX	Truck Engines	OM423 A-LA	4220530430	12.0	18.04	67.0	F	G1
8075.600	IN-EX	Truck Engines	OM427 A-LA D	4030530030	12.0	18.04	67.0	F	G1
8075.600	IN-EX	Truck Engines	OM427 A-LA D	4220530430	12.0	18.04	67.0	F	G1
8075.600	IN-EX	Truck Engines	OM427 HA D	4030530030	12.0	18.04	67.0	F	G1
8075.600	IN-EX	Truck Engines	OM427 HA D	4220530430	12.0	18.04	67.0	F	G1
8075.600	IN-EX	Truck Engines	OM440 440.976	4030530030	12.0	18.04	67.0	F	G1

(D1) Internal diameter, (D2) External diameter, (B) Shape, (C) Material

VALVE GUIDES

MERCEDES BENZ

IVT Ref.	Type	Model	Engine	OEM Ref.	D1	D2	Length	B	C
8075.600	IN-EX	Truck Engines	OM440 440.976	4220530430	12.0	18.04	67.0	F	G1
8075.600	IN-EX	Truck Engines	OM441	4030530030	12.0	18.04	67.0	F	G1
8075.600	IN-EX	Truck Engines	OM441	4220530430	12.0	18.04	67.0	F	G1
8075.600	IN-EX	Truck Engines	OM441 A-LA D	4030530030	12.0	18.04	67.0	F	G1
8075.600	IN-EX	Truck Engines	OM441 A-LA D	4220530430	12.0	18.04	67.0	F	G1
8075.600	IN-EX	Truck Engines	OM441 A-LA-HA D	4030530030	12.0	18.04	67.0	F	G1
8075.600	IN-EX	Truck Engines	OM441 A-LA-HA D	4220530430	12.0	18.04	67.0	F	G1
8075.600	IN-EX	Truck Engines	OM442	4030530030	12.0	18.04	67.0	F	G1
8075.600	IN-EX	Truck Engines	OM442	4030530030	12.0	18.04	67.0	F	G1
8075.600	IN-EX	Truck Engines	OM442	4220530430	12.0	18.04	67.0	F	G1
8075.600	IN-EX	Truck Engines	OM442	4220530430	12.0	18.04	67.0	F	G1
8075.600	IN-EX	Truck Engines	OM442 A D	4030530030	12.0	18.04	67.0	F	G1
8075.600	IN-EX	Truck Engines	OM442 A D	4220530430	12.0	18.04	67.0	F	G1
8075.600	IN-EX	Truck Engines	OM442 A-LA D	4030530030	12.0	18.04	67.0	F	G1
8075.600	IN-EX	Truck Engines	OM442 A-LA D	4220530430	12.0	18.04	67.0	F	G1
8075.600	IN-EX	Truck Engines	OM442 LA D	4030530030	12.0	18.04	67.0	F	G1
8075.600	IN-EX	Truck Engines	OM442 LA D	4220530430	12.0	18.04	67.0	F	G1
8075.600	IN-EX	Truck Engines	OM447	4030530030	12.0	18.04	67.0	F	G1
8075.600	IN-EX	Truck Engines	OM447	4220530430	12.0	18.04	67.0	F	G1
8075.600	IN-EX	Truck Engines	OM447 A-LA D	4030530030	12.0	18.04	67.0	F	G1
8075.600	IN-EX	Truck Engines	OM447 A-LA D	4220530430	12.0	18.04	67.0	F	G1
8075.600	IN-EX	Truck Engines	OM447 A-LA-HA D	4030530030	12.0	18.04	67.0	F	G1
8075.600	IN-EX	Truck Engines	OM447 A-LA-HA D	4220530430	12.0	18.04	67.0	F	G1
8075.600	IN-EX	Truck Engines	OM447 H	4030530030	12.0	18.04	67.0	F	G1
8075.600	IN-EX	Truck Engines	OM447 H	4220530430	12.0	18.04	67.0	F	G1
8075.600	IN-EX	Truck Engines	OM447 HA D	4030530030	12.0	18.04	67.0	F	G1
8075.600	IN-EX	Truck Engines	OM447 HA D	4220530430	12.0	18.04	67.0	F	G1
8075.600	IN-EX	Truck Engines No. 001400->	OM427	4030530030	12.0	18.04	67.0	F	G1
8075.600	IN-EX	Truck Engines No. 001400->	OM427	4220530430	12.0	18.04	67.0	F	G1
8075.600	IN-EX	Truck Engines No. 001400->	OM427 H	4030530030	12.0	18.04	67.0	F	G1
8075.600	IN-EX	Truck Engines No. 001400->	OM427 H	4220530430	12.0	18.04	67.0	F	G1
8075.600	IN-EX	Truck Engines No. 029461	OM407 AH D	4030530030	12.0	18.04	67.0	F	G1
8075.600	IN-EX	Truck Engines No. 029461	OM407 AH D	4220530430	12.0	18.04	67.0	F	G1
8075.600	IN-EX	Truck Engines No. 029461->	OM407	4030530030	12.0	18.04	67.0	F	G1
8075.600	IN-EX	Truck Engines No. 029461->	OM407	4220530430	12.0	18.04	67.0	F	G1
8075.600	IN-EX	Truck Engines No. 029461->	OM407 A-LA-HA D	4030530030	12.0	18.04	67.0	F	G1
8075.600	IN-EX	Truck Engines No. 029461->	OM407 A-LA-HA D	4220530430	12.0	18.04	67.0	F	G1
8075.600	IN-EX	Truck Engines No. 029461->	OM407 D 407.901	4030530030	12.0	18.04	67.0	F	G1
8075.600	IN-EX	Truck Engines No. 029461->	OM407 D 407.901	4220530430	12.0	18.04	67.0	F	G1
8075.600	IN-EX	Truck Engines No. 029461->	OM407 H	4030530030	12.0	18.04	67.0	F	G1
8075.600	IN-EX	Truck Engines No. 029461->	OM407 H	4220530430	12.0	18.04	67.0	F	G1
8075.600	IN-EX	Truck Engines No. 139488->	OM421	4030530030	12.0	18.04	67.0	F	G1
8075.600	IN-EX	Truck Engines No. 139488->	OM421	4220530430	12.0	18.04	67.0	F	G1
8075.600	IN-EX	Truck Engines No. 139488->	OM421 A-LA	4030530030	12.0	18.04	67.0	F	G1
8075.600	IN-EX	Truck Engines No. 139488->	OM421 A-LA	4220530430	12.0	18.04	67.0	F	G1
8075.600	IN-EX	Truck Engines No. 139488->	OM422	4030530030	12.0	18.04	67.0	F	G1
8075.600	IN-EX	Truck Engines No. 139488->	OM422	4220530430	12.0	18.04	67.0	F	G1
8075.600	IN-EX	Truck Engines No. 139488->	OM422 A D	4030530030	12.0	18.04	67.0	F	G1
8075.600	IN-EX	Truck Engines No. 139488->	OM422 A D	4220530430	12.0	18.04	67.0	F	G1
8075.600	IN-EX	Truck Engines No. 139488->	OM422 LA D	4030530030	12.0	18.04	67.0	F	G1
8075.600	IN-EX	Truck Engines No. 139488->	OM422 LA D	4220530430	12.0	18.04	67.0	F	G1
8075.600	IN-EX	Truck Engines No. 139488->	OM423	4030530030	12.0	18.04	67.0	F	G1
8075.600	IN-EX	Truck Engines No. 139488->	OM423	4220530430	12.0	18.04	67.0	F	G1
8075.600	IN-EX	Truck Engines No. 265215->	OM401	4030530030	12.0	18.04	67.0	F	G1
8075.600	IN-EX	Truck Engines No. 265215->	OM401	4220530430	12.0	18.04	67.0	F	G1
8075.600	IN-EX	Truck Engines No. 265215->	OM402	4030530030	12.0	18.04	67.0	F	G1
8075.600	IN-EX	Truck Engines No. 265215->	OM402	4220530430	12.0	18.04	67.0	F	G1
8075.600	IN-EX	Truck Engines No. 265215->	OM403	4030530030	12.0	18.04	67.0	F	G1
8075.600	IN-EX	Truck Engines No. 265215->	OM403	4220530430	12.0	18.04	67.0	F	G1
8066.600	EX	Unimog U 100 L	OM 602.948	6010500924	9.0	14.03	37.5	F-1	G
8066.600	EX	Unimog U 100 L	OM 602.948	6010501124	9.0	14.03	37.5	F-1	G
8066.600	EX	Unimog U 100 L	OM 602.981	6010500924	9.0	14.03	37.5	F-1	G

(D1) Internal diameter, (D2) External diameter, (B) Shape, (C) Material

VALVE GUIDES

MERCEDES BENZ

IVT Ref.	Type	Model	Engine	OEM Ref.	D1	D2	Length	B	C
8066.600	EX	Unimog U 100 L	OM 602.981	6010501124	9.0	14.03	37.5	F-1	G
8066.600	EX	Unimog U 90	OM 602.941	6010500924	9.0	14.03	37.5	F-1	G
8066.600	EX	Unimog U 90	OM 602.941	6010501124	9.0	14.03	37.5	F-1	G
8066.600	EX	Unimog U 90	OM 602.981	6010500924	9.0	14.03	37.5	F-1	G
8066.600	EX	Unimog U 90	OM 602.981	6010501124	9.0	14.03	37.5	F-1	G
8066.600	EX	Unimog UX 100 H	OM 602.981	6010500924	9.0	14.03	37.5	F-1	G
8066.600	EX	Unimog UX 100 H	OM 602.981	6010501124	9.0	14.03	37.5	F-1	G
8066.600	EX	Unimog UX 100 H	OM 602.989	6010500924	9.0	14.03	37.5	F-1	G
8066.600	EX	Unimog UX 100 H	OM 602.989	6010501124	9.0	14.03	37.5	F-1	G
8066.600	EX	V 230 T D	OM 601.970	6010500924	9.0	14.03	37.5	F-1	G
8066.600	EX	V 230 T D	OM 601.970	6010501124	9.0	14.03	37.5	F-1	G
8185.600	IN-EX	VANEO (414), 1.6 (414.700)	M 166.961	1110531029	7.0	12.56	37.5	F	G1
8185.600	IN-EX	VANEO (414), 1.6 (414.700)	M 166.961	1110531029	7.0	12.56	37.5	F	G1
8185.600	IN-EX	VANEO (414), 1.6 (414.700)	M 166.961	6060530230	7.0	12.56	37.5	F	G1
8185.600	IN-EX	VANEO (414), 1.6 (414.700)	M 166.961	6060530230	7.0	12.56	37.5	F	G1
8184.600	IN	VANEO (414), 1.6 (414.700)	M 166.961	6060531229	6.0	12.56	37.5	F	G1
8184.600	IN	VANEO (414), 1.6 (414.700)	M 166.961	6060531229	6.0	12.56	37.5	F	G1
8185.600	IN-EX	VANEO (414), 1.9 (414.700)	M 166.991	1110531029	7.0	12.56	37.5	F	G1
8185.600	IN-EX	VANEO (414), 1.9 (414.700)	M 166.991	6060530230	7.0	12.56	37.5	F	G1
8184.600	IN	VANEO (414), 1.9 (414.700)	M 166.991	6060531229	6.0	12.56	37.5	F	G1
8066.600	EX	Vario 512 D	OM 602.984	6010500924	9.0	14.03	37.5	F-1	G
8066.600	EX	Vario 512 D	OM 602.984	6010501124	9.0	14.03	37.5	F-1	G
8066.600	EX	Vario 612 D	OM 602.984	6010500924	9.0	14.03	37.5	F-1	G
8066.600	EX	Vario 612 D	OM 602.984	6010501124	9.0	14.03	37.5	F-1	G
8066.600	EX	Vario 612 D	OM 602.985	6010500924	9.0	14.03	37.5	F-1	G
8066.600	EX	Vario 612 D	OM 602.985	6010501124	9.0	14.03	37.5	F-1	G
8066.600	EX	Vario 812 D	OM 602.984	6010500924	9.0	14.03	37.5	F-1	G
8066.600	EX	Vario 812 D	OM 602.984	6010501124	9.0	14.03	37.5	F-1	G
8066.600	EX	Vario 812 D	OM 602.985	6010500924	9.0	14.03	37.5	F-1	G
8066.600	EX	Vario 812 D	OM 602.985	6010501124	9.0	14.03	37.5	F-1	G
8066.600	EX	Vario Autobus 812	OM 602.984	6010500924	9.0	14.03	37.5	F-1	G
8066.600	EX	Vario Autobus 812	OM 602.984	6010501124	9.0	14.03	37.5	F-1	G
8066.600	EX	Vario Autobus 812	OM 602.985	6010500924	9.0	14.03	37.5	F-1	G
8066.600	EX	Vario Autobus 812	OM 602.985	6010501124	9.0	14.03	37.5	F-1	G
8066.600	EX	Vario Promiscuo 512 D	OM 602.984	6010500924	9.0	14.03	37.5	F-1	G
8066.600	EX	Vario Promiscuo 512 D	OM 602.984	6010501124	9.0	14.03	37.5	F-1	G
8066.600	EX	Vario Promiscuo 612 D	OM 602.984	6010500924	9.0	14.03	37.5	F-1	G
8066.600	EX	Vario Promiscuo 612 D	OM 602.984	6010501124	9.0	14.03	37.5	F-1	G
8066.600	EX	Vario Promiscuo 612 D	OM 602.985	6010500924	9.0	14.03	37.5	F-1	G
8066.600	EX	Vario Promiscuo 612 D	OM 602.985	6010501124	9.0	14.03	37.5	F-1	G
8066.600	EX	Vario Promiscuo 812 D	OM 602.984	6010500924	9.0	14.03	37.5	F-1	G
8066.600	EX	Vario Promiscuo 812 D	OM 602.984	6010501124	9.0	14.03	37.5	F-1	G
8066.600	EX	Vario Promiscuo 812 D	OM 602.985	6010500924	9.0	14.03	37.5	F-1	G
8066.600	EX	Vario Promiscuo 812 D	OM 602.985	6010501124	9.0	14.03	37.5	F-1	G
8066.600	EX	Vario Ribaltabile 612 D	OM 602.984	6010500924	9.0	14.03	37.5	F-1	G
8066.600	EX	Vario Ribaltabile 612 D	OM 602.984	6010501124	9.0	14.03	37.5	F-1	G
8066.600	EX	Vario Ribaltabile 612 D	OM 602.985	6010500924	9.0	14.03	37.5	F-1	G
8066.600	EX	Vario Ribaltabile 612 D	OM 602.985	6010501124	9.0	14.03	37.5	F-1	G
8066.600	EX	Vario Ribaltabile 812 D	OM 602.984	6010500924	9.0	14.03	37.5	F-1	G
8066.600	EX	Vario Ribaltabile 812 D	OM 602.984	6010501124	9.0	14.03	37.5	F-1	G
8066.600	EX	Vario Ribaltabile 812 D	OM 602.985	6010500924	9.0	14.03	37.5	F-1	G
8066.600	EX	Vario Ribaltabile 812 D	OM 602.985	6010501124	9.0	14.03	37.5	F-1	G
8161.604	IN-EX	VIANO (W639), CDI 2.0	OM 646.982	05080044AB	7.0	12.56	37.5	F	S03
8161.604	IN-EX	VIANO (W639), CDI 2.0 4-matic	OM 646.982	05080044AB	7.0	12.56	37.5	F	S03
8161.604	IN-EX	VIANO (W639), CDI 2.2	OM 646.980/OM 646.982	05080044AB	7.0	12.56	37.5	F	S03
8161.604	IN-EX	VIANO (W639), CDI 2.2 4-matic	OM 646.982	05080044AB	7.0	12.56	37.5	F	S03
8161.604	IN-EX	VITO / MIXTO Kasten (W639), 10	OM 646.983	05080044AB	7.0	12.56	37.5	F	S03
8161.604	IN-EX	VITO / MIXTO Kasten (W639), 11	OM 646.982	05080044AB	7.0	12.56	37.5	F	S03
8161.604	IN-EX	VITO / MIXTO Kasten (W639), 11	OM 646.982	05080044AB	7.0	12.56	37.5	F	S03
8161.604	IN-EX	VITO / MIXTO Kasten (W639), 11	OM 646.980/OM 646.982	05080044AB	7.0	12.56	37.5	F	S03
8161.604	IN-EX	VITO / MIXTO Kasten (W639), 11	OM 646.982	05080044AB	7.0	12.56	37.5	F	S03
8066.600	EX	Vito Autobus 108 D 2.3	OM 601.942	6010500924	9.0	14.03	37.5	F-1	G

(D1) Internal diameter, (D2) External diameter, (B) Shape, (C) Material

VALVE GUIDES

IVT Ref.	Type	Model	Engine	OEM Ref.	D1	D2	Length	B	C
MERCEDES BENZ									
8066.600	EX	Vito Autobus 108 D 2.3	OM 601.942	6010501124	9.0	14.03	37.5	F-1	G
8066.600	EX	Vito Autobus 110 D 2.3	OM 601.970	6010500924	9.0	14.03	37.5	F-1	G
8066.600	EX	Vito Autobus 110 D 2.3	OM 601.970	6010501124	9.0	14.03	37.5	F-1	G
8161.604	IN-EX	VITO Bus (638), 108 CDI 2.2 (638	OM 611A (60 KW CDI)	05080044AB	7.0	12.56	37.5	F	S03
8168.600	IN	VITO Bus (638), 108 D 2.3 (638.1	OM 601.942	6010500624	8.0	14.03	39.5	F-1	G
8168.600	IN	VITO Bus (638), 108 D 2.3 (638.1	OM 601.942	6010500824	8.0	14.03	39.5	F-1	G
8161.604	IN-EX	VITO Bus (638), 110 CDI 2.2 (638	OM 611LA (75 KW CDI)	05080044AB	7.0	12.56	37.5	F	S03
8168.600	IN	VITO Bus (638), 110 TD 2.3 (638.	OM 601.970	6010500624	8.0	14.03	39.5	F-1	G
8168.600	IN	VITO Bus (638), 110 TD 2.3 (638.	OM 601.970	6010500824	8.0	14.03	39.5	F-1	G
8161.604	IN-EX	VITO Bus (638), 112 CDI 2.2 (638	OM 611.980	05080044AB	7.0	12.56	37.5	F	S03
8185.600	IN-EX	VITO Bus (638), 113 2.0 (638.114,	M 111.948/M 111.950	1110531029	7.0	12.56	37.5	F	G1
8185.600	IN-EX	VITO Bus (638), 113 2.0 (638.114,	M 111.948/M 111.950	6060530230	7.0	12.56	37.5	F	G1
8185.600	IN-EX	VITO Bus (638), 114 2.3 (638.134,	M 111.978	1110531029	7.0	12.56	37.5	F	G1
8185.600	IN-EX	VITO Bus (638), 114 2.3 (638.134,	M 111.978	6060530230	7.0	12.56	37.5	F	G1
8161.604	IN-EX	VITO Bus (W639), 109 CDI	OM 646.983	05080044AB	7.0	12.56	37.5	F	S03
8161.604	IN-EX	VITO Bus (W639), 111 CDI	OM 646.982	05080044AB	7.0	12.56	37.5	F	S03
8161.604	IN-EX	VITO Bus (W639), 111 CDI 4x4	OM 646.982	05080044AB	7.0	12.56	37.5	F	S03
8161.604	IN-EX	VITO Bus (W639), 115 CDI	OM 646.982	05080044AB	7.0	12.56	37.5	F	S03
8161.604	IN-EX	VITO Bus (W639), 115 CDI 4x4	OM 646.982	05080044AB	7.0	12.56	37.5	F	S03
8066.600	EX	Vito Furgonato 108 D 2.3	OM 601.942	6010500924	9.0	14.03	37.5	F-1	G
8066.600	EX	Vito Furgonato 108 D 2.3	OM 601.942	6010501124	9.0	14.03	37.5	F-1	G
8066.600	EX	Vito Furgonato 110 D 2.3	OM 601.970	6010500924	9.0	14.03	37.5	F-1	G
8066.600	EX	Vito Furgonato 110 D 2.3	OM 601.970	6010501124	9.0	14.03	37.5	F-1	G
8161.604	IN-EX	VITO Kasten (638), 108 CDI 2.2 (	OM 611A (60 KW CDI)	05080044AB	7.0	12.56	37.5	F	S03
8168.600	IN	VITO Kasten (638), 108 D 2.3 (63	OM 601.942	6010500624	8.0	14.03	39.5	F-1	G
8168.600	IN	VITO Kasten (638), 108 D 2.3 (63	OM 601.942	6010500824	8.0	14.03	39.5	F-1	G
8161.604	IN-EX	VITO Kasten (638), 110 CDI 2.2 (	OM 611LA (75 KW CDI)	05080044AB	7.0	12.56	37.5	F	S03
8168.600	IN	VITO Kasten (638), 110 D 2.3 (63	OM 601.970	6010500624	8.0	14.03	39.5	F-1	G
8168.600	IN	VITO Kasten (638), 110 D 2.3 (63	OM 601.970	6010500824	8.0	14.03	39.5	F-1	G
8161.604	IN-EX	VITO Kasten (638), 112 CDI 2.2 (	OM 611.980	05080044AB	7.0	12.56	37.5	F	S03
8185.600	IN-EX	VITO Kasten (638), 113 2.0 (638.0	M 111.948/M 111.950	1110531029	7.0	12.56	37.5	F	G1
8185.600	IN-EX	VITO Kasten (638), 113 2.0 (638.0	M 111.948/M 111.950	6060530230	7.0	12.56	37.5	F	G1
8185.600	IN-EX	VITO Kasten (638), 114 2.3 (638.0	M 111.978	1110531029	7.0	12.56	37.5	F	G1
8185.600	IN-EX	VITO Kasten (638), 114 2.3 (638.0	M 111.978	6060530230	7.0	12.56	37.5	F	G1
MG									
8124.100	IN-EX	METRO, 1300	-	12G1111	7.1	11.94	43.0	A-1	G
8124.100	IN-EX	METRO, Turbo	-	12G1111	7.1	11.94	43.0	A-1	G
8162.101	IN-EX	MG ZT- T, 2.0 CDTi	204D2		6.0	11.54	39.0	A	B
8162.101	IN-EX	MG ZT, 2.0 CDTi	204D2		6.0	11.54	39.0	A	B
MINI									
8215.104	IN-EX	MINI (R50, R53), Cooper	W10 B16 A		6.0	11.05	41.0	A	S03
8193.101	IN	MINI (R50, R53), John Cooper Wo	W11 B16 A		5.0	9.05	42.0	A	B
8194.101	EX	MINI (R50, R53), John Cooper Wo	W11 B16 A		5.0	9.05	44.5	A	B
8215.104	IN-EX	MINI (R50, R53), One	W10 B16 A		6.0	11.05	41.0	A	S03
8188.904	IN-EX	MINI (R50, R53), One D	1ND	1112230020	6.0	11.09	40.6	P	S03
8188.904	IN-EX	MINI (R50, R53), One D	1ND	1112233030	6.0	11.09	40.6	P	S03
8194.101	EX	MINI (R56), Cooper	N12 B16 A		5.0	9.05	44.5	A	B
8193.101	IN	MINI (R56), Cooper	N12 B16 A		5.0	9.05	42.0	A	B
8194.101	EX	MINI (R56), Cooper	N16 B16 A		5.0	9.05	44.5	A	B
8193.101	IN	MINI (R56), Cooper	N16 B16 A		5.0	9.05	42.0	A	B
8194.101	EX	MINI (R56), Cooper	N16 B16 A/N12 B16 A		5.0	9.05	44.5	A	B
8193.101	IN	MINI (R56), Cooper	N16 B16 A/N12 B16 A		5.0	9.05	42.0	A	B
8165.104	IN-EX	MINI (R56), Cooper D	9HZ (DV6TED4)/W16 D16	0220A6	5.5	9.55	34.0	A	S03
8194.101	EX	MINI (R56), Cooper S	N14 B16 A		5.0	9.05	44.5	A	B
8193.101	IN	MINI (R56), Cooper S	N14 B16 A		5.0	9.05	42.0	A	B
8193.101	IN	MINI (R56), Cooper S	N18 B16 A		5.0	9.05	42.0	A	B
8193.101	IN	MINI (R56), Cooper S	N18 B16 A		5.0	9.05	42.0	A	B
8194.101	EX	MINI (R56), Cooper S	N18 B16 A		5.0	9.05	44.5	A	B
8194.101	EX	MINI (R56), Cooper S	N18 B16 A		5.0	9.05	44.5	A	B
8194.101	EX	MINI (R56), Cooper S	N18 B16 A		5.0	9.05	44.5	A	B

(D1) Internal diameter, (D2) External diameter, (B) Shape, (C) Material

VALVE GUIDES

IVT Ref.	Type	Model	Engine	OEM Ref.	D1	D2	Length	B	C
MINI									
8193.101	IN	MINI (R56), Cooper S	N18 B16 A		5.0	9.05	42.0	A	B
8194.101	EX	MINI (R56), John Cooper Works	N14 B16 C		5.0	9.05	44.5	A	B
8193.101	IN	MINI (R56), John Cooper Works	N14 B16 C		5.0	9.05	42.0	A	B
8194.101	EX	MINI (R56), John Cooper Works G	N18 B16 C		5.0	9.05	44.5	A	B
8193.101	IN	MINI (R56), John Cooper Works G	N18 B16 C		5.0	9.05	42.0	A	B
8194.101	EX	MINI (R56), One	N12 B14 A		5.0	9.05	44.5	A	B
8194.101	EX	MINI (R56), One	N12 B14 A		5.0	9.05	44.5	A	B
8193.101	IN	MINI (R56), One	N12 B14 A		5.0	9.05	42.0	A	B
8193.101	IN	MINI (R56), One	N12 B14 A		5.0	9.05	42.0	A	B
8194.101	EX	MINI (R56), One	N16 B16 A		5.0	9.05	44.5	A	B
8194.101	EX	MINI (R56), One	N16 B16 A		5.0	9.05	44.5	A	B
8193.101	IN	MINI (R56), One	N16 B16 A		5.0	9.05	42.0	A	B
8193.101	IN	MINI (R56), One	N16 B16 A		5.0	9.05	42.0	A	B
8194.101	EX	MINI Cabriolet (R57), Cooper	N12 B16 A		5.0	9.05	44.5	A	B
8193.101	IN	MINI Cabriolet (R57), Cooper	N12 B16 A		5.0	9.05	42.0	A	B
8193.101	IN	MINI Cabriolet (R57), Cooper	N16 B16 A		5.0	9.05	42.0	A	B
8194.101	EX	MINI Cabriolet (R57), Cooper	N16 B16 A		5.0	9.05	44.5	A	B
8194.101	EX	MINI Cabriolet (R57), Cooper	N16 B16 A		5.0	9.05	44.5	A	B
8193.101	IN	MINI Cabriolet (R57), Cooper	N16 B16 A		5.0	9.05	42.0	A	B
8193.101	IN	MINI Cabriolet (R57), Cooper S	N14 B16 A		5.0	9.05	42.0	A	B
8194.101	EX	MINI Cabriolet (R57), Cooper S	N14 B16 A		5.0	9.05	44.5	A	B
8193.101	IN	MINI Cabriolet (R57), Cooper S	N18 B16 A		5.0	9.05	42.0	A	B
8193.101	IN	MINI Cabriolet (R57), Cooper S	N18 B16 A		5.0	9.05	42.0	A	B
8194.101	EX	MINI Cabriolet (R57), Cooper S	N18 B16 A		5.0	9.05	44.5	A	B
8194.101	EX	MINI Cabriolet (R57), Cooper S	N18 B16 A		5.0	9.05	44.5	A	B
8194.101	EX	MINI Cabriolet (R57), John Coope	N14 B16 C		5.0	9.05	44.5	A	B
8193.101	IN	MINI Cabriolet (R57), John Coope	N14 B16 C		5.0	9.05	42.0	A	B
8194.101	EX	MINI Cabriolet (R57), One	N16 B16 A		5.0	9.05	44.5	A	B
8193.101	IN	MINI Cabriolet (R57), One	N16 B16 A		5.0	9.05	42.0	A	B
8194.101	EX	MINI CLUBMAN (R55), Cooper	N16 B16 A		5.0	9.05	44.5	A	B
8193.101	IN	MINI CLUBMAN (R55), Cooper	N16 B16 A		5.0	9.05	42.0	A	B
8193.101	IN	MINI CLUBMAN (R55), Cooper	N16 B16 A		5.0	9.05	42.0	A	B
8194.101	EX	MINI CLUBMAN (R55), Cooper	N16 B16 A		5.0	9.05	44.5	A	B
8194.101	EX	MINI CLUBMAN (R55), Cooper	N16 B16 A/N12 B16 A		5.0	9.05	44.5	A	B
8193.101	IN	MINI CLUBMAN (R55), Cooper	N16 B16 A/N12 B16 A		5.0	9.05	42.0	A	B
8165.104	IN-EX	MINI CLUBMAN (R55), Cooper D	9HZ (DV6TED4)	0220A6	5.5	9.55	34.0	A	S03
8193.101	IN	MINI CLUBMAN (R55), Cooper S	N14 B16 A		5.0	9.05	42.0	A	B
8194.101	EX	MINI CLUBMAN (R55), Cooper S	N14 B16 A		5.0	9.05	44.5	A	B
8194.101	EX	MINI CLUBMAN (R55), Cooper S	N18 B16 A		5.0	9.05	44.5	A	B
8193.101	IN	MINI CLUBMAN (R55), Cooper S	N18 B16 A		5.0	9.05	42.0	A	B
8194.101	EX	MINI CLUBMAN (R55), Cooper S	N18 B16 A		5.0	9.05	44.5	A	B
8193.101	IN	MINI CLUBMAN (R55), Cooper S	N18 B16 A		5.0	9.05	42.0	A	B
8194.101	EX	MINI CLUBMAN (R55), John Coo	N14 B16 A		5.0	9.05	44.5	A	B
8193.101	IN	MINI CLUBMAN (R55), John Coo	N14 B16 A		5.0	9.05	42.0	A	B
8193.101	IN	MINI CLUBMAN (R55), John Coo	N14 B16 C		5.0	9.05	42.0	A	B
8194.101	EX	MINI CLUBMAN (R55), John Coo	N14 B16 C		5.0	9.05	44.5	A	B
8194.101	EX	MINI CLUBMAN (R55), One	N16 B16 A		5.0	9.05	44.5	A	B
8193.101	IN	MINI CLUBMAN (R55), One	N16 B16 A		5.0	9.05	42.0	A	B
8194.101	EX	MINI CLUBVAN (R55), Cooper	N16 B16 A		5.0	9.05	44.5	A	B
8193.101	IN	MINI CLUBVAN (R55), Cooper	N16 B16 A		5.0	9.05	42.0	A	B
8193.101	IN	MINI CLUBVAN (R55), One	N16 B16 A		5.0	9.05	42.0	A	B
8194.101	EX	MINI CLUBVAN (R55), One	N16 B16 A		5.0	9.05	44.5	A	B
8215.104	IN-EX	MINI Convertible (R52), Cooper	W10 B16 A		6.0	11.05	41.0	A	S03
8215.104	IN-EX	MINI Convertible (R52), One	W10 B16 A		6.0	11.05	41.0	A	S03
8193.101	IN	MINI COUNTRYMAN (R60), Coop	N16 B16 A		5.0	9.05	42.0	A	B
8193.101	IN	MINI COUNTRYMAN (R60), Coop	N16 B16 A		5.0	9.05	42.0	A	B
8194.101	EX	MINI COUNTRYMAN (R60), Coop	N16 B16 A		5.0	9.05	44.5	A	B
8194.101	EX	MINI COUNTRYMAN (R60), Coop	N16 B16 A		5.0	9.05	44.5	A	B
8193.101	IN	MINI COUNTRYMAN (R60), Coop	N16 B16 A		5.0	9.05	42.0	A	B
8194.101	EX	MINI COUNTRYMAN (R60), Coop	N16 B16 A		5.0	9.05	44.5	A	B
8193.101	IN	MINI COUNTRYMAN (R60), Coop	N18 B16 A		5.0	9.05	42.0	A	B
8194.101	EX	MINI COUNTRYMAN (R60), Coop	N18 B16 A		5.0	9.05	44.5	A	B

(D1) Internal diameter, (D2) External diameter, (B) Shape, (C) Material

VALVE GUIDES

IVT Ref.	Type	Model	Engine	OEM Ref.	D1	D2	Length	B	C
MINI									
8194.101	EX	MINI COUNTRYMAN (R60), Coop	N18 B16 A		5.0	9.05	44.5	A	B
8194.101	EX	MINI COUNTRYMAN (R60), Coop	N18 B16 A		5.0	9.05	44.5	A	B
8193.101	IN	MINI COUNTRYMAN (R60), Coop	N18 B16 A		5.0	9.05	42.0	A	B
8193.101	IN	MINI COUNTRYMAN (R60), Coop	N18 B16 A		5.0	9.05	42.0	A	B
8193.101	IN	MINI COUNTRYMAN (R60), Coop	N18 B16 A		5.0	9.05	42.0	A	B
8194.101	EX	MINI COUNTRYMAN (R60), Coop	N18 B16 A		5.0	9.05	44.5	A	B
8193.101	IN	MINI COUNTRYMAN (R60), Coop	N18 B16 A		5.0	9.05	42.0	A	B
8194.101	EX	MINI COUNTRYMAN (R60), Coop	N18 B16 A		5.0	9.05	44.5	A	B
8194.101	EX	MINI COUNTRYMAN (R60), Coop	N18 B16 A		5.0	9.05	44.5	A	B
8193.101	IN	MINI COUNTRYMAN (R60), Coop	N18 B16 A		5.0	9.05	42.0	A	B
8193.101	IN	MINI COUNTRYMAN (R60), One	N16 B16 A		5.0	9.05	42.0	A	B
8194.101	EX	MINI COUNTRYMAN (R60), One	N16 B16 A		5.0	9.05	44.5	A	B
8194.101	EX	MINI Coupe (R58), Cooper	N16 B16 A		5.0	9.05	44.5	A	B
8194.101	EX	MINI Coupe (R58), Cooper	N16 B16 A		5.0	9.05	44.5	A	B
8193.101	IN	MINI Coupe (R58), Cooper	N16 B16 A		5.0	9.05	42.0	A	B
8193.101	IN	MINI Coupe (R58), Cooper	N16 B16 A		5.0	9.05	42.0	A	B
8193.101	IN	MINI Coupe (R58), Cooper S	N18 B16 A		5.0	9.05	42.0	A	B
8193.101	IN	MINI Coupe (R58), Cooper S	N18 B16 A		5.0	9.05	42.0	A	B
8193.101	IN	MINI Coupe (R58), Cooper S	N18 B16 A		5.0	9.05	42.0	A	B
8194.101	EX	MINI Coupe (R58), Cooper S	N18 B16 A		5.0	9.05	44.5	A	B
8194.101	EX	MINI Coupe (R58), Cooper S	N18 B16 A		5.0	9.05	44.5	A	B
8194.101	EX	MINI Coupe (R58), Cooper S	N18 B16 A		5.0	9.05	44.5	A	B
8193.101	IN	MINI Coupe (R58), John Cooper	N14 B16 C		5.0	9.05	42.0	A	B
8194.101	EX	MINI Coupe (R58), John Cooper	N14 B16 C		5.0	9.05	44.5	A	B
8193.101	IN	MINI PACEMAN (R61), Cooper	N16 B16 A		5.0	9.05	42.0	A	B
8194.101	EX	MINI PACEMAN (R61), Cooper	N16 B16 A		5.0	9.05	44.5	A	B
8194.101	EX	MINI PACEMAN (R61), Cooper A	N16 B16 A		5.0	9.05	44.5	A	B
8193.101	IN	MINI PACEMAN (R61), Cooper A	N16 B16 A		5.0	9.05	42.0	A	B
8194.101	EX	MINI PACEMAN (R61), Cooper A	N18 B16 A		5.0	9.05	44.5	A	B
8193.101	IN	MINI PACEMAN (R61), Cooper A	N18 B16 A		5.0	9.05	42.0	A	B
8193.101	IN	MINI PACEMAN (R61), Cooper S	N18 B16 A		5.0	9.05	42.0	A	B
8194.101	EX	MINI PACEMAN (R61), Cooper S	N18 B16 A		5.0	9.05	44.5	A	B
8194.101	EX	MINI PACEMAN (R61), Cooper S	N18 B16 A		5.0	9.05	44.5	A	B
8193.101	IN	MINI PACEMAN (R61), Cooper S	N18 B16 A		5.0	9.05	42.0	A	B
8194.101	EX	MINI PACEMAN (R61), John Coo	N18 B16 C		5.0	9.05	44.5	A	B
8193.101	IN	MINI PACEMAN (R61), John Coo	N18 B16 C		5.0	9.05	42.0	A	B
8194.101	EX	MINI Roadster (R59), Cooper	N16 B16 A		5.0	9.05	44.5	A	B
8194.101	EX	MINI Roadster (R59), Cooper	N16 B16 A		5.0	9.05	44.5	A	B
8193.101	IN	MINI Roadster (R59), Cooper	N16 B16 A		5.0	9.05	42.0	A	B
8193.101	IN	MINI Roadster (R59), Cooper	N16 B16 A		5.0	9.05	42.0	A	B
8194.101	EX	MINI Roadster (R59), Cooper S	N18 B16 A		5.0	9.05	44.5	A	B
8193.101	IN	MINI Roadster (R59), Cooper S	N18 B16 A		5.0	9.05	42.0	A	B
8193.101	IN	MINI Roadster (R59), Cooper S	N18 B16 A		5.0	9.05	42.0	A	B
8193.101	IN	MINI Roadster (R59), Cooper S	N18 B16 A		5.0	9.05	42.0	A	B
8194.101	EX	MINI Roadster (R59), Cooper S	N18 B16 A		5.0	9.05	44.5	A	B
8194.101	EX	MINI Roadster (R59), Cooper S	N18 B16 A		5.0	9.05	44.5	A	B
8193.101	IN	MINI Roadster (R59), John Coope	N14 B16 C/N18 B16 C		5.0	9.05	42.0	A	B
8194.101	EX	MINI Roadster (R59), John Coope	N14 B16 C/N18 B16 C		5.0	9.05	44.5	A	B
MITSUBISHI									
8135.601	IN-EX	CARISMA (DA_), 1.9 TD (DA4A)	F8QT		8.0	13.1	39.0	F	B
8069.601	IN-EX	Carisma 1.9 DI-D	F9Q1	7700859086	7.0	12.06	38.3	F-1	B
8069.601	IN-EX	Carisma 1.9 DI-D	F9Q1	M889393	7.0	12.06	38.3	F-1	B
8135.601	IN-EX	CARISMA Stufenheck (DA_), 1.9	F8QT		8.0	13.1	39.0	F	B
8069.601	IN-EX	Carisma TreVolumi 1.9 DI-D	F9Q1	7700859086	7.0	12.06	38.3	F-1	B
8069.601	IN-EX	Carisma TreVolumi 1.9 DI-D	F9Q1	M889393	7.0	12.06	38.3	F-1	B
8144.600	EX	COLT I (A15_A), 1.2 GL (A151A)	4G11		6.6	12.04	49.5	F-6	G1
8144.600	EX	COLT I (A15_A), 1.4 GLX,GT (A1	4G12		6.6	12.04	49.5	F-6	G1
8144.600	EX	COLT I (A15_A), 1.4 Turbo (A152	4G12 T		6.6	12.04	49.5	F-6	G1
8144.600	EX	COLT II (C1_A), 1.3 EL,GL (C11A	G13B		6.6	12.04	49.5	F-6	G1
8144.600	EX	COLT II (C1_A), 1.5 GLX (C12A)	4G15		6.6	12.04	49.5	F-6	G1
8144.600	EX	COLT II (C1_A), 1.5 GLX (C12A)	G15B		6.6	12.04	49.5	F-6	G1

(D1) Internal diameter, (D2) External diameter, (B) Shape, (C) Material

VALVE GUIDES

MITSUBISHI

IVT Ref.	Type	Model	Engine	OEM Ref.	D1	D2	Length	B	C
8144.600	EX	COLT III (C5_A), 1.3 (C51A)	4G13 (8V)		6.6	12.04	49.5	F-6	G1
8144.600	EX	COLT III (C5_A), 1.3 12V (C51A)	4G13 (12V)		6.6	12.04	49.5	F-6	G1
8144.600	EX	COLT III (C5_A), 1.3 GL (C61A)	4G13 (8V)		6.6	12.04	49.5	F-6	G1
8144.600	EX	COLT III (C5_A), 1.5 (C52A) KAT	4G15 (12V)		6.6	12.04	49.5	F-6	G1
8144.600	EX	COLT III (C5_A), 1.5 GLXi (C52A)	4G15		6.6	12.04	49.5	F-6	G1
8045.904	EX	COLT III (C5_A), 1.6 GTi 16V (C5	4G61		6.6	12.06	50.5	P	S03
8043.904	IN	COLT III (C5_A), 1.6 GTi 16V (C5	4G61	MD372791	6.6	12.06	45.5	P	S03
8045.904	EX	COLT III (C5_A), 1.8 GTi 16V (C5	4G67		6.6	12.06	50.5	P	S03
8043.904	IN	COLT III (C5_A), 1.8 GTi 16V (C5	4G67	MD372791	6.6	12.06	45.5	P	S03
8144.600	EX	COLT IV (CA_A), 1.3 GLi 12V (CA	4G13 (12V)		6.6	12.04	49.5	F-6	G1
8144.600	EX	COLT IV (CA_A), 1.6 (CA4A)	4G92 (SOHC 16V)		6.6	12.04	49.5	F-6	G1
8183.605	IN-EX	COLT VI (Z3_A, Z2_A), 1.5 DI-D	OM 639.939		6.0	11.56	34.4	F	S06
8183.605	IN-EX	COLT VI (Z3_A, Z2_A), 1.5 DI-D	OM 639.939		6.0	11.56	34.4	F	S06
8139.904	IN	ECLIPSE I (D2_A), 2.0 i 16V (D22	4G63 (DOHC 16V)	2211433911	6.6	12.1	45.5	P	S03
8139.904	IN	ECLIPSE I (D2_A), 2.0 i 16V 4WD	4G63 (DOHC 16V)	2211433911	6.6	12.1	45.5	P	S03
8139.904	IN	ECLIPSE II (D3_A), 2000 GS 16V	4G63 (DOHC 16V)	2211433911	6.6	12.1	45.5	P	S03
8069.601	IN-EX	Espace Star 1.9 DI-D	F9Q1	7700859086	7.0	12.06	38.3	F-1	B
8069.601	IN-EX	Espace Star 1.9 DI-D	F9Q1	M889393	7.0	12.06	38.3	F-1	B
8139.904	IN	GALANT IV (E3_A), 2.0 GTI 16V (	4G63 (DOHC 16V)	2211433911	6.6	12.1	45.5	P	S03
8139.904	IN	GALANT IV (E3_A), 2.0 GTI 16V (	4G63 (DOHC 16V)	2211433911	6.6	12.1	45.5	P	S03
8139.904	IN	GALANT IV (E3_A), 2.0 GTI 16V	4G63 (DOHC 16V)	2211433911	6.6	12.1	45.5	P	S03
8139.904	IN	GALANT IV Stufenheck (E3_A), 2.	4G63 (DOHC 16V)	2211433911	6.6	12.1	45.5	P	S03
8139.904	IN	GALANT IV Stufenheck (E3_A), 2.	4G63 (DOHC 16V)	2211433911	6.6	12.1	45.5	P	S03
8139.904	IN	GALANT IV Stufenheck (E3_A), 2.	4G63 (DOHC 16V)	2211433911	6.6	12.1	45.5	P	S03
8045.904	EX	GALANT V (E5_A, E7_A, E8_A),	6G73		6.6	12.06	50.5	P	S03
8043.904	IN	GALANT V (E5_A, E7_A, E8_A),	6G73	MD372791	6.6	12.06	45.5	P	S03
8045.904	EX	GALANT V Stufenheck (E5_A, E7	6G73		6.6	12.06	50.5	P	S03
8043.904	IN	GALANT V Stufenheck (E5_A, E7	6G73	MD372791	6.6	12.06	45.5	P	S03
8170.601	IN-EX	GRANDIS (NA_W), 2.0 DI-D	BSY		6.0	10.06	42.0	F	B
8170.601	IN-EX	GRANDIS (NA_W), 2.0 DI-D	BWC		6.0	10.06	42.0	F	B
8139.904	IN	L 400 / SPACE GEAR Bus (PD_W	4G63 (SOHC 16V)	2211433911	6.6	12.1	45.5	P	S03
8144.600	EX	LANCER F II (A17_), 1.2 GLX (A1	4G11		6.6	12.04	49.5	F-6	G1
8144.600	EX	LANCER F II (A17_), 1.4 GLX (A1	4G12		6.6	12.04	49.5	F-6	G1
8144.600	EX	LANCER F II (A17_), 1.4 Turbo	4G12 T		6.6	12.04	49.5	F-6	G1
8144.600	EX	LANCER I (A17_), 1.2 (A171)	4G11		6.6	12.04	49.5	F-6	G1
8144.600	EX	LANCER I (A17_), 1.4 GLX (A172	4G12		6.6	12.04	49.5	F-6	G1
8144.600	EX	LANCER III (C1_A, C6_A), 1.5 GL	4G15		6.6	12.04	49.5	F-6	G1
8144.600	EX	LANCER III (C1_A, C6_A), 1.5 GL	G15B		6.6	12.04	49.5	F-6	G1
8144.600	EX	LANCER III Station Wagon (C1_V	4G15		6.6	12.04	49.5	F-6	G1
8144.600	EX	LANCER III Station Wagon (C1_V	G15B		6.6	12.04	49.5	F-6	G1
8144.600	EX	LANCER III Station Wagon (C1_V	4G15 (12V)		6.6	12.04	49.5	F-6	G1
8144.600	EX	LANCER IV (C6_A, C7_A), 1.3 12	4G13 (12V)		6.6	12.04	49.5	F-6	G1
8144.600	EX	LANCER IV (C6_A, C7_A), 1.5 (C	4G15		6.6	12.04	49.5	F-6	G1
8144.600	EX	LANCER IV (C6_A, C7_A), 1.5 12	4G15 (12V)		6.6	12.04	49.5	F-6	G1
8045.904	EX	LANCER IV (C6_A, C7_A), 1.8 G	4G67		6.6	12.06	50.5	P	S03
8043.904	IN	LANCER IV (C6_A, C7_A), 1.8 G	4G67	MD372791	6.6	12.06	45.5	P	S03
8144.600	EX	LANCER IV Stufenheck (C6_A), 1	4G13 (8V)		6.6	12.04	49.5	F-6	G1
8144.600	EX	LANCER IV Stufenheck (C6_A), 1	G13B/4G13 (8V)		6.6	12.04	49.5	F-6	G1
8144.600	EX	LANCER IV Stufenheck (C6_A), 1	4G13 (12V)		6.6	12.04	49.5	F-6	G1
8144.600	EX	LANCER IV Stufenheck (C6_A), 1	4G15 (12V)		6.6	12.04	49.5	F-6	G1
8144.600	EX	LANCER IV Stufenheck (C6_A), 1	4G15 (12V)		6.6	12.04	49.5	F-6	G1
8043.904	IN	LANCER Kombi (CS_W), 2.0	4G63 (DOHC 16V)	MD372791	6.6	12.06	45.5	P	S03
8043.904	IN	LANCER Stufenheck (CS_A, CT0)	4G63 (DOHC 16V)	MD372791	6.6	12.06	45.5	P	S03
8045.904	EX	LANCER Stufenheck (CS_A, CT0)	4G63 Turbo		6.6	12.06	50.5	P	S03
8043.904	IN	LANCER Stufenheck (CS_A, CT0)	4G63 Turbo	MD372791	6.6	12.06	45.5	P	S03
8045.904	EX	LANCER Stufenheck (CS_A, CT0)	4G63 Turbo		6.6	12.06	50.5	P	S03
8043.904	IN	LANCER Stufenheck (CS_A, CT0)	4G63 Turbo	MD372791	6.6	12.06	45.5	P	S03
8144.600	EX	LANCER V (CB/D_A), 1.3 (CB1A)	4G13 (12V)		6.6	12.04	49.5	F-6	G1
8045.904	EX	OUTLANDER I (CU_W), 2.0 (CU2	4G63 (DOHC 16V)		6.6	12.06	50.5	P	S03
8043.904	IN	OUTLANDER I (CU_W), 2.0 (CU2	4G63 (DOHC 16V)	MD372791	6.6	12.06	45.5	P	S03
8045.904	EX	OUTLANDER I (CU_W), 2.0 4WD	4G63 (DOHC 16V)		6.6	12.06	50.5	P	S03
8045.904	EX	OUTLANDER I (CU_W), 2.0 4WD	4G63 (DOHC 16V)		6.6	12.06	50.5	P	S03

(D1) Internal diameter, (D2) External diameter, (B) Shape, (C) Material

VALVE GUIDES

IVT Ref.	Type	Model	Engine	OEM Ref.	D1	D2	Length	B	C
MITSUBISHI									
8043.904	IN	OUTLANDER I (CU_W), 2.0 4WD	4G63 (DOHC 16V)	MD372791	6.6	12.06	45.5	P	S03
8043.904	IN	OUTLANDER I (CU_W), 2.0 4WD	4G63 (DOHC 16V)	MD372791	6.6	12.06	45.5	P	S03
8045.904	EX	OUTLANDER I (CU_W), 2.0 Turb	4G63 T (DOHC 16V)		6.6	12.06	50.5	P	S03
8043.904	IN	OUTLANDER I (CU_W), 2.0 Turb	4G63 T (DOHC 16V)	MD372791	6.6	12.06	45.5	P	S03
8170.601	IN-EX	OUTLANDER II (CW_W), 2.0 DI-D	BSY		6.0	10.06	42.0	F	B
8045.904	EX	SIGMA Station Wagon (F0_W), 3.	6G72 (SOHC 12V)		6.6	12.06	50.5	P	S03
8043.904	IN	SIGMA Station Wagon (F0_W), 3.	6G72 (SOHC 12V)	MD372791	6.6	12.06	45.5	P	S03
8139.904	IN	SPACE RUNNER (N1_W, N2_W),	4G63 (DOHC 16V)	2211433911	6.6	12.1	45.5	P	S03
8139.904	IN	SPACE RUNNER (N6_W), 2.4 GD	4G64 (GDI)	2211433911	6.6	12.1	45.5	P	S03
8139.904	IN	SPACE RUNNER (N6_W), 2.4 GD	4G64 (GDI)	2211433911	6.6	12.1	45.5	P	S03
8139.904	IN	SPACE WAGON (N3_W, N4_W),	4G63 (SOHC 16V)	2211433911	6.6	12.1	45.5	P	S03
8139.904	IN	SPACE WAGON (N3_W, N4_W),	4G63 (SOHC 16V)	2211433911	6.6	12.1	45.5	P	S03
8139.904	IN	SPACE WAGON (N9_W, N8_W),	4G64 (GDI)	2211433911	6.6	12.1	45.5	P	S03
8139.904	IN	SPACE WAGON (N9_W, N8_W),	4G64 (GDI)	2211433911	6.6	12.1	45.5	P	S03
8139.904	IN	SPACE WAGON (N9_W, N8_W),	4G64 (GDI)	2211433911	6.6	12.1	45.5	P	S03
8139.904	IN	SPACE WAGON (N9_W, N8_W),	4G64 (GDI)	2211433911	6.6	12.1	45.5	P	S03
8144.600	EX	TREDIA (A21_), 1.4 GLX (A211)	4G12		6.6	12.04	49.5	F-6	G1
MORRIS									
8124.100	IN-EX	ITAL Station Wagon, 1.3	-	12G1111	7.1	11.94	43.0	A-1	G
8124.100	IN-EX	ITAL, 1.3	-	12G1111	7.1	11.94	43.0	A-1	G
NISSAN									
8033.900	IN	100 NX (B13), 1.6	GA16DS	1321253Y60	5.5	9.51	40.0	P	G1
8031.900	EX	100 NX (B13), 1.6	GA16DS	1321353Y60	5.5	9.51	40.0	P-6	G1
8033.900	IN	100 NX (B13), 1.6 SR	GA16DE	1321253Y60	5.5	9.51	40.0	P	G1
8031.900	EX	100 NX (B13), 1.6 SR	GA16DE	1321353Y60	5.5	9.51	40.0	P-6	G1
8183.605	IN-EX	350 Z Roadster (Z33), 3.5	VQ35HR		6.0	11.56	34.4	F	S06
8033.900	IN	ALMERA I (N15), 1.4	GA14DE	1321253Y60	5.5	9.51	40.0	P	G1
8031.900	EX	ALMERA I (N15), 1.4	GA14DE	1321353Y60	5.5	9.51	40.0	P-6	G1
8033.900	IN	ALMERA I (N15), 1.4 GX,LX	GA14DE	1321253Y60	5.5	9.51	40.0	P	G1
8031.900	EX	ALMERA I (N15), 1.4 GX,LX	GA14DE	1321353Y60	5.5	9.51	40.0	P-6	G1
8033.900	IN	ALMERA I (N15), 1.6	GA16DE	1321253Y60	5.5	9.51	40.0	P	G1
8031.900	EX	ALMERA I (N15), 1.6	GA16DE	1321353Y60	5.5	9.51	40.0	P-6	G1
8033.900	IN	ALMERA I (N15), 1.6 SLX	GA16DE	1321253Y60	5.5	9.51	40.0	P	G1
8031.900	EX	ALMERA I (N15), 1.6 SLX	GA16DE	1321353Y60	5.5	9.51	40.0	P-6	G1
8169.600	IN	ALMERA I (N15), 2.0 D	CD20		7.0	11.03	45.0	F	G
8033.900	IN	ALMERA I Hatchback (N15), 1.4	GA14DE	1321253Y60	5.5	9.51	40.0	P	G1
8031.900	EX	ALMERA I Hatchback (N15), 1.4	GA14DE	1321353Y60	5.5	9.51	40.0	P-6	G1
8033.900	IN	ALMERA I Hatchback (N15), 1.4 S	GA14DE	1321253Y60	5.5	9.51	40.0	P	G1
8031.900	EX	ALMERA I Hatchback (N15), 1.4 S	GA14DE	1321353Y60	5.5	9.51	40.0	P-6	G1
8033.900	IN	ALMERA I Hatchback (N15), 1.6	GA16DE	1321253Y60	5.5	9.51	40.0	P	G1
8031.900	EX	ALMERA I Hatchback (N15), 1.6	GA16DE	1321353Y60	5.5	9.51	40.0	P-6	G1
8033.900	IN	ALMERA I Hatchback (N15), 1.6 S	GA16DE	1321253Y60	5.5	9.51	40.0	P	G1
8031.900	EX	ALMERA I Hatchback (N15), 1.6 S	GA16DE	1321353Y60	5.5	9.51	40.0	P-6	G1
8169.600	IN	ALMERA I Hatchback (N15), 2.0	CD20		7.0	11.03	45.0	F	G
8033.900	IN	ALMERA II (N16), 1.5	QG15DE	1321253Y60	5.5	9.51	40.0	P	G1
8033.900	IN	ALMERA II (N16), 1.5	QG15DE	1321253Y60	5.5	9.51	40.0	P	G1
8031.900	EX	ALMERA II (N16), 1.5	QG15DE	1321353Y60	5.5	9.51	40.0	P-6	G1
8031.900	EX	ALMERA II (N16), 1.5	QG15DE	1321353Y60	5.5	9.51	40.0	P-6	G1
8035.601	IN-EX	ALMERA II (N16), 1.5 dCi	K9K 722		6.0	11.07	40.5	F	B
8033.900	IN	ALMERA II (N16), 1.8	QG18DE	1321253Y60	5.5	9.51	40.0	P	G1
8033.900	IN	ALMERA II (N16), 1.8	QG18DE	1321253Y60	5.5	9.51	40.0	P	G1
8031.900	EX	ALMERA II (N16), 1.8	QG18DE	1321353Y60	5.5	9.51	40.0	P-6	G1
8031.900	EX	ALMERA II (N16), 1.8	QG18DE	1321353Y60	5.5	9.51	40.0	P-6	G1
8172.900	IN	ALMERA II (N16), 2.2 dCi	YD22DDT	13212AD260	6.0	10.03	59.7	P	G1
8173.904	EX	ALMERA II (N16), 2.2 dCi	YD22DDT	13213AD260	6.0	10.03	44.2	P	S03
8172.900	IN	ALMERA II (N16), 2.2 dCi	YD22DDTi	13212AD260	6.0	10.03	59.7	P	G1
8173.904	EX	ALMERA II (N16), 2.2 dCi	YD22DDTi	13213AD260	6.0	10.03	44.2	P	S03
8172.900	IN	ALMERA II (N16), 2.2 Di	YD22DDT	13212AD260	6.0	10.03	59.7	P	G1
8173.904	EX	ALMERA II (N16), 2.2 Di	YD22DDT	13213AD260	6.0	10.03	44.2	P	S03
8033.900	IN	ALMERA II Hatchback (N16), 1.5	QG15DE	1321253Y60	5.5	9.51	40.0	P	G1

(D1) Internal diameter, (D2) External diameter, (B) Shape, (C) Material

VALVE GUIDES

IVT Ref.	Type	Model	Engine	OEM Ref.	D1	D2	Length	B	C
NISSAN									
8033.900	IN	ALMERA II Hatchback (N16), 1.5	QG15DE	1321253Y60	5.5	9.51	40.0	P	G1
8031.900	EX	ALMERA II Hatchback (N16), 1.5	QG15DE	1321353Y60	5.5	9.51	40.0	P-6	G1
8031.900	EX	ALMERA II Hatchback (N16), 1.5	QG15DE	1321353Y60	5.5	9.51	40.0	P-6	G1
8035.601	IN-EX	ALMERA II Hatchback (N16), 1.5	K9K 722		6.0	11.07	40.5	F	B
8033.900	IN	ALMERA II Hatchback (N16), 1.8	QG18DE	1321253Y60	5.5	9.51	40.0	P	G1
8033.900	IN	ALMERA II Hatchback (N16), 1.8	QG18DE	1321253Y60	5.5	9.51	40.0	P	G1
8031.900	EX	ALMERA II Hatchback (N16), 1.8	QG18DE	1321353Y60	5.5	9.51	40.0	P-6	G1
8031.900	EX	ALMERA II Hatchback (N16), 1.8	QG18DE	1321353Y60	5.5	9.51	40.0	P-6	G1
8172.900	IN	ALMERA II Hatchback (N16), 2.2	YD22DDT	13212AD260	6.0	10.03	59.7	P	G1
8173.904	EX	ALMERA II Hatchback (N16), 2.2	YD22DDT	13213AD260	6.0	10.03	44.2	P	S03
8172.900	IN	ALMERA II Hatchback (N16), 2.2	YD22DDTi	13212AD260	6.0	10.03	59.7	P	G1
8173.904	EX	ALMERA II Hatchback (N16), 2.2	YD22DDTi	13213AD260	6.0	10.03	44.2	P	S03
8172.900	IN	ALMERA II Hatchback (N16), 2.2	YD22DDT	13212AD260	6.0	10.03	59.7	P	G1
8173.904	EX	ALMERA II Hatchback (N16), 2.2	YD22DDT	13213AD260	6.0	10.03	44.2	P	S03
8033.900	IN	ALMERA TINO (V10), 1.8	QG18DE	1321253Y60	5.5	9.51	40.0	P	G1
8033.900	IN	ALMERA TINO (V10), 1.8	QG18DE	1321253Y60	5.5	9.51	40.0	P	G1
8031.900	EX	ALMERA TINO (V10), 1.8	QG18DE	1321353Y60	5.5	9.51	40.0	P-6	G1
8031.900	EX	ALMERA TINO (V10), 1.8	QG18DE	1321353Y60	5.5	9.51	40.0	P-6	G1
8172.900	IN	ALMERA TINO (V10), 2.2 dCi	YD22DDT	13212AD260	6.0	10.03	59.7	P	G1
8173.904	EX	ALMERA TINO (V10), 2.2 dCi	YD22DDT	13213AD260	6.0	10.03	44.2	P	S03
8172.900	IN	ALMERA TINO (V10), 2.2 dCi	YD22DDTi	13212AD260	6.0	10.03	59.7	P	G1
8173.904	EX	ALMERA TINO (V10), 2.2 dCi	YD22DDTi	13213AD260	6.0	10.03	44.2	P	S03
8172.900	IN	ALMERA TINO (V10), 2.2 Di	YD22DDTi	13212AD260	6.0	10.03	59.7	P	G1
8173.904	EX	ALMERA TINO (V10), 2.2 Di	YD22DDTi	13213AD260	6.0	10.03	44.2	P	S03
8169.600	IN	BLUEBIRD (T72 , T12), 1.6	CA16S		7.0	11.03	45.0	F	G
8169.600	IN	BLUEBIRD (T72 , T12), 1.8 i 16V (	CA18D		7.0	11.03	45.0	F	G
8169.600	IN	BLUEBIRD (T72 , T12), 1.8 Turbo	CA18T		7.0	11.03	45.0	F	G
8169.600	IN	BLUEBIRD (T72 , T12), 2.0 (T12)	CA20S		7.0	11.03	45.0	F	G
8169.600	IN	BLUEBIRD (T72 , T12), 2.0 i (HLT	CA20E		7.0	11.03	45.0	F	G
8169.600	IN	BLUEBIRD (U11), 1.8	CA18S		7.0	11.03	45.0	F	G
8169.600	IN	BLUEBIRD (U11), 1.8 Turbo	CA18T		7.0	11.03	45.0	F	G
8169.600	IN	BLUEBIRD (U11), 2.0 i	CA20E		7.0	11.03	45.0	F	G
8169.600	IN	BLUEBIRD Hatchback (T72, T12),	CA16S		7.0	11.03	45.0	F	G
8169.600	IN	BLUEBIRD Hatchback (T72, T12),	CA18D		7.0	11.03	45.0	F	G
8169.600	IN	BLUEBIRD Hatchback (T72, T12),	CA18T		7.0	11.03	45.0	F	G
8169.600	IN	BLUEBIRD Hatchback (T72, T12),	CA20S		7.0	11.03	45.0	F	G
8169.600	IN	BLUEBIRD Hatchback (T72, T12),	CA20E		7.0	11.03	45.0	F	G
8169.600	IN	BLUEBIRD Station Wagon (WU11	CA20S		7.0	11.03	45.0	F	G
8169.600	IN	BLUEBIRD Station Wagon (WU11	CA20E		7.0	11.03	45.0	F	G
8169.600	IN	CHERRY III (N12), 1.7 D	CD17		7.0	11.03	45.0	F	G
8200.904	IN	CUBE (Z12), 1.6 16V	HR16DE	13212ED060	5.0	9.03	42.2	P-3	S03
8157.601	IN-EX	INTERSTAR Bus (X70), dCi 100	G9U 720	8200562080	6.0	11.07	40.5	F	B
8157.601	IN-EX	INTERSTAR Bus (X70), dCi 120	G9U 720	8200562080	6.0	11.07	40.5	F	B
8157.601	IN-EX	INTERSTAR Bus (X70), dCI 90	G9T 722	8200562080	6.0	11.07	40.5	F	B
8157.601	IN-EX	INTERSTAR Kasten (X70), dCi 10	G9U 720	8200562080	6.0	11.07	40.5	F	B
8157.601	IN-EX	INTERSTAR Kasten (X70), dCi 12	G9U 720	8200562080	6.0	11.07	40.5	F	B
8157.601	IN-EX	INTERSTAR Kasten (X70), dCI 90	G9T 722	8200562080	6.0	11.07	40.5	F	B
8157.601	IN-EX	INTERSTAR Pritsche/Fahrgestell,	G9U 720	8200562080	6.0	11.07	40.5	F	B
8157.601	IN-EX	INTERSTAR Pritsche/Fahrgestell,	G9U 720	8200562080	6.0	11.07	40.5	F	B
8200.904	IN	JUKE (F15), 1.6	HR16DE	13212ED060	5.0	9.03	42.2	P-3	S03
8200.904	IN	JUKE (F15), 1.6	HR16DE	13212ED060	5.0	9.03	42.2	P-3	S03
8035.601	IN-EX	KUBISTAR (X76), 1.5 dCi	K9K 704		6.0	11.07	40.5	F	B
8035.601	IN-EX	KUBISTAR (X76), 1.5 dCi	K9K 710/K9K 714		6.0	11.07	40.5	F	B
8035.601	IN-EX	KUBISTAR (X76), 1.5 dCi	K9K 710/K9K 714		6.0	11.07	40.5	F	B
8035.601	IN-EX	KUBISTAR (X76), 1.5 dCi	K9K 722		6.0	11.07	40.5	F	B
8035.601	IN-EX	KUBISTAR (X76), 1.5 dCi 70	K9K 716/K9K 700		6.0	11.07	40.5	F	B
8035.601	IN-EX	KUBISTAR (X76), 1.5 dCi 85	K9K 276		6.0	11.07	40.5	F	B
8035.601	IN-EX	KUBISTAR Kasten (X80), 1.5 dCi	K9K 704		6.0	11.07	40.5	F	B
8035.601	IN-EX	KUBISTAR Kasten (X80), 1.5 dCi	K9K 710/K9K 714		6.0	11.07	40.5	F	B
8035.601	IN-EX	KUBISTAR Kasten (X80), 1.5 dCi	K9K 722		6.0	11.07	40.5	F	B
8169.600	IN	LAUREL (JC32), 2.8 D	RD28		7.0	11.03	45.0	F	G
8205.900	IN-EX	MASCOTT Kasten/Kombi, 120.35	DXi 3/ZD3 A 600		7.0	11.03	45.0	P-6	G

(D1) Internal diameter, (D2) External diameter, (B) Shape, (C) Material

VALVE GUIDES

IVT Ref.	Type	Model	Engine	OEM Ref.	D1	D2	Length	B	C
NISSAN									
8205.900	IN-EX	MASCOTT Kasten/Kombi, 120.55	DXi 3/ZD3 A 600		7.0	11.03	45.0	P-6	G
8205.900	IN-EX	MASCOTT Kasten/Kombi, 160.35	ZD3 A 604/DXi 3		7.0	11.03	45.0	P-6	G
8205.900	IN-EX	MASCOTT Kasten/Kombi, 160.55	ZD3 A 604/DXi 3		7.0	11.03	45.0	P-6	G
8205.900	IN-EX	MASCOTT Pritsche/Fahrgestell, 1	DXi 3/ZD3 A 600		7.0	11.03	45.0	P-6	G
8205.900	IN-EX	MASCOTT Pritsche/Fahrgestell, 1	DXi 3/ZD3 A 600		7.0	11.03	45.0	P-6	G
8205.900	IN-EX	MASCOTT Pritsche/Fahrgestell, 1	DXi 3/ZD3 A 600		7.0	11.03	45.0	P-6	G
8205.900	IN-EX	MASCOTT Pritsche/Fahrgestell, 1	ZD3 A 604/DXi 3		7.0	11.03	45.0	P-6	G
8205.900	IN-EX	MASCOTT Pritsche/Fahrgestell, 1	ZD3 A 604/DXi 3		7.0	11.03	45.0	P-6	G
8205.900	IN-EX	MASCOTT Pritsche/Fahrgestell, 1	ZD3 A 604/DXi 3		7.0	11.03	45.0	P-6	G
8205.900	IN-EX	MASTER II Kasten (FD), 3.0 dCi 1	ZD3 600		7.0	11.03	45.0	P-6	G
8205.900	IN-EX	MASTER II Kasten (FD), 3.0 dCi 1	ZD3 A 604		7.0	11.03	45.0	P-6	G
8205.900	IN-EX	MASTER II Pritsche/Fahrgestell (	ZD3 600		7.0	11.03	45.0	P-6	G
8205.900	IN-EX	MASTER II Pritsche/Fahrgestell (	ZD3 A 604		7.0	11.03	45.0	P-6	G
8198.905	IN	MICRA C+C (K12), 1.4 16V	CR14DE	132124F100	5.5	9.51	42.0	P	S06
8199.905	EX	MICRA C+C (K12), 1.4 16V	CR14DE	132134F100	5.5	9.51	44.0	P-6	S06
8200.904	IN	MICRA C+C (K12), 1.6 160 SR	HR16DE	13212ED060	5.0	9.03	42.2	P-3	S03
8201.904	EX	MICRA C+C (K12), 1.6 160 SR	HR16DE	13213ED060	5.0	9.03	42.2	P-6	S03
8198.905	IN	MICRA III (K12), 1.4 16V	CR14DE	132124F100	5.5	9.51	42.0	P	S06
8199.905	EX	MICRA III (K12), 1.4 16V	CR14DE	132134F100	5.5	9.51	44.0	P-6	S06
8035.601	IN-EX	MICRA III (K12), 1.5 dCi	K9K 276		6.0	11.07	40.5	F	B
8035.601	IN-EX	MICRA III (K12), 1.5 dCi	K9K 704		6.0	11.07	40.5	F	B
8035.601	IN-EX	MICRA III (K12), 1.5 dCi	K9K 708		6.0	11.07	40.5	F	B
8035.601	IN-EX	MICRA III (K12), 1.5 dCi	K9K 722		6.0	11.07	40.5	F	B
8200.904	IN	MICRA III (K12), 160 SR	HR16DE	13212ED060	5.0	9.03	42.2	P-3	S03
8201.904	EX	MICRA III (K12), 160 SR	HR16DE	13213ED060	5.0	9.03	42.2	P-6	S03
8200.904	IN	MICRA IV (K13), 1.2	HR12DE	13212ED060	5.0	9.03	42.2	P-3	S03
8205.900	IN-EX	MOVANO Combi (J9), 3.0 DTi	ZD3 202/ZD3 200		7.0	11.03	45.0	P-6	G
8205.900	IN-EX	MOVANO Kasten (F9), 3.0 DTI	ZD3 202/ZD3 200		7.0	11.03	45.0	P-6	G
8205.900	IN-EX	MOVANO Kipper (H9), 3.0 DTI	ZD3 202/ZD3 200		7.0	11.03	45.0	P-6	G
8205.900	IN-EX	MOVANO Pritsche/Fahrgestell (U	ZD3 202/ZD3 200		7.0	11.03	45.0	P-6	G
8172.900	IN	MURANO (Z51), 2.5 dCi 4x4	YD25DDTi	13212AD260	6.0	10.03	59.7	P	G1
8173.904	EX	MURANO (Z51), 2.5 dCi 4x4	YD25DDTi	13213AD260	6.0	10.03	44.2	P	S03
8172.900	IN	NAVARA (D40), 2.5 dCi	YD25DDTi	13212AD260	6.0	10.03	59.7	P	G1
8173.904	EX	NAVARA (D40), 2.5 dCi	YD25DDTi	13213AD260	6.0	10.03	44.2	P	S03
8172.900	IN	NAVARA (D40), 2.5 dCi 4WD	YD25DDTi	13212AD260	6.0	10.03	59.7	P	G1
8172.900	IN	NAVARA (D40), 2.5 dCi 4WD	YD25DDTi	13212AD260	6.0	10.03	59.7	P	G1
8172.900	IN	NAVARA (D40), 2.5 dCi 4WD	YD25DDTi	13212AD260	6.0	10.03	59.7	P	G1
8173.904	EX	NAVARA (D40), 2.5 dCi 4WD	YD25DDTi	13213AD260	6.0	10.03	44.2	P	S03
8173.904	EX	NAVARA (D40), 2.5 dCi 4WD	YD25DDTi	13213AD260	6.0	10.03	44.2	P	S03
8173.904	EX	NAVARA (D40), 2.5 dCi 4WD	YD25DDTi	13213AD260	6.0	10.03	44.2	P	S03
8173.904	EX	NAVARA (D40), 2.5 dCi 4WD	YD25DDTi	13213AD260	6.0	10.03	44.2	P	S03
8172.900	IN	NAVARA Pritsche/Fahrgestell (D4	YD25DDTi	13212AD260	6.0	10.03	59.7	P	G1
8173.904	EX	NAVARA Pritsche/Fahrgestell (D4	YD25DDTi	13213AD260	6.0	10.03	44.2	P	S03
8198.905	IN	NOTE (E11), 1.4	CR14DE	132124F100	5.5	9.51	42.0	P	S06
8199.905	EX	NOTE (E11), 1.4	CR14DE	132134F100	5.5	9.51	44.0	P-6	S06
8035.601	IN-EX	NOTE (E11), 1.5 dCi	K9K 276		6.0	11.07	40.5	F	B
8035.601	IN-EX	NOTE (E11), 1.5 dCi	K9K 276		6.0	11.07	40.5	F	B
8035.601	IN-EX	NOTE (E11), 1.5 dCi	K9K 700		6.0	11.07	40.5	F	B
8200.904	IN	NOTE (E11), 1.6	HR16DE	13212ED060	5.0	9.03	42.2	P-3	S03
8201.904	EX	NOTE (E11), 1.6	HR16DE	13213ED060	5.0	9.03	42.2	P-6	S03
8035.601	IN-EX	NV200 / EVALIA Bus, 1.5 dci (M2	K9K 400/K9K 608/K9K 628		6.0	11.07	40.5	F	B
8035.601	IN-EX	NV200 / EVALIA Bus, 1.5 dci (M2	K9K 646/K9K 636		6.0	11.07	40.5	F	B
8035.601	IN-EX	NV200 / EVALIA Bus, 1.5 dci (M2	K9K 892		6.0	11.07	40.5	F	B
8200.904	IN	NV200 / EVALIA Bus, 1.6 16V (M	HR16DE	13212ED060	5.0	9.03	42.2	P-3	S03
8201.904	EX	NV200 / EVALIA Bus, 1.6 16V (M	HR16DE	13213ED060	5.0	9.03	42.2	P-6	S03
8035.601	IN-EX	NV200 Kasten, 1.5 dci (M20, M20	K9K 400/K9K 608/K9K 628		6.0	11.07	40.5	F	B
8035.601	IN-EX	NV200 Kasten, 1.5 dci (M20, M20	K9K 646/K9K 636		6.0	11.07	40.5	F	B
8035.601	IN-EX	NV200 Kasten, 1.5 dci (M20, M20	K9K 892		6.0	11.07	40.5	F	B
8200.904	IN	NV200 Kasten, 1.6 16V (M20, M2	HR16DE	13212ED060	5.0	9.03	42.2	P-3	S03
8201.904	EX	NV200 Kasten, 1.6 16V (M20, M2	HR16DE	13213ED060	5.0	9.03	42.2	P-6	S03
8172.900	IN	PATHFINDER (R51), 2.5 dCi	YD25DDTi	13212AD260	6.0	10.03	59.7	P	G1
8173.904	EX	PATHFINDER (R51), 2.5 dCi	YD25DDTi	13213AD260	6.0	10.03	44.2	P	S03

(D1) Internal diameter, (D2) External diameter, (B) Shape, (C) Material

VALVE GUIDES

NISSAN

IVT Ref.	Type	Model	Engine	OEM Ref.	D1	D2	Length	B	C
8172.900	IN	PATHFINDER (R51), 2.5 dCi 4WD	YD25DDTi	13212AD260	6.0	10.03	59.7	P	G1
8172.900	IN	PATHFINDER (R51), 2.5 dCi 4WD	YD25DDTi	13212AD260	6.0	10.03	59.7	P	G1
8173.904	EX	PATHFINDER (R51), 2.5 dCi 4WD	YD25DDTi	13213AD260	6.0	10.03	44.2	P	S03
8173.904	EX	PATHFINDER (R51), 2.5 dCi 4WD	YD25DDTi	13213AD260	6.0	10.03	44.2	P	S03
8169.600	IN	PATROL GR IV (Y60, GR), 2.8 TD	RD28T		7.0	11.03	45.0	F	G
8169.600	IN	PATROL GR V Wagon (Y61), 2.8	RD28Ti		7.0	11.03	45.0	F	G
8169.600	IN	PATROL GR V Wagon (Y61), 2.8	RD28Ti		7.0	11.03	45.0	F	G
8205.900	IN-EX	PATROL GR V Wagon (Y61), 3.0	ZD30DDTi		7.0	11.03	45.0	P-6	G
8205.900	IN-EX	PATROL GR V Wagon (Y61), 3.0	ZD30DDTi		7.0	11.03	45.0	P-6	G
8169.600	IN	PATROL III/2 Station Wagon (W2	RD28T		7.0	11.03	45.0	F	G
8172.900	IN	PICK UP (D22), 2.5 Di	YD25DDTi	13212AD260	6.0	10.03	59.7	P	G1
8173.904	EX	PICK UP (D22), 2.5 Di	YD25DDTi	13213AD260	6.0	10.03	44.2	P	S03
8172.900	IN	PICK UP (D22), 2.5 Di 4WD	YD25DDTi	13212AD260	6.0	10.03	59.7	P	G1
8173.904	EX	PICK UP (D22), 2.5 Di 4WD	YD25DDTi	13213AD260	6.0	10.03	44.2	P	S03
8167.604	IN-EX	PIXO (UA0), 1.0	K10 B	132134A00A	5.5	10.6	34.0	F	S03
8169.600	IN	PRAIRIE (M10, NM10), 1.8 SGL (	CA18S		7.0	11.03	45.0	F	G
8169.600	IN	PRAIRIE (M10, NM10), 1.8 SGL (	CA18S		7.0	11.03	45.0	F	G
8169.600	IN	PRAIRIE (M10, NM10), 2.0 4x4 (N	CA20S		7.0	11.03	45.0	F	G
8169.600	IN	PRAIRIE PRO (M11), 2.0 i	CA20E		7.0	11.03	45.0	F	G
8169.600	IN	PRAIRIE PRO (M11), 2.0 i 4x4	CA20E		7.0	11.03	45.0	F	G
8083.101	IN-EX	Primastar Autobus 2.0	F4R 720	7700109151	5.5	11.07	40.6	A	B
8083.101	IN-EX	Primastar Autobus 2.0	F4R 722	7700109151	5.5	11.07	40.6	A	B
8069.601	IN-EX	Primastar Autobus DCi 100	F9Q 760	7700859086	7.0	12.06	38.3	F-1	B
8069.601	IN-EX	Primastar Autobus DCi 100	F9Q 760	7700859086	7.0	12.06	38.3	F-1	B
8069.601	IN-EX	Primastar Autobus DCi 100	F9Q 760	7700859086	7.0	12.06	38.3	F-1	B
8069.601	IN-EX	Primastar Autobus DCi 100	F9Q 760	M889393	7.0	12.06	38.3	F-1	B
8069.601	IN-EX	Primastar Autobus DCi 100	F9Q 760	M889393	7.0	12.06	38.3	F-1	B
8069.601	IN-EX	Primastar Autobus DCi 100	F9Q 760	M889393	7.0	12.06	38.3	F-1	B
8069.601	IN-EX	Primastar Autobus DCi 80	F9Q 762	7700859086	7.0	12.06	38.3	F-1	B
8069.601	IN-EX	Primastar Autobus DCi 80	F9Q 762	7700859086	7.0	12.06	38.3	F-1	B
8069.601	IN-EX	Primastar Autobus DCi 80	F9Q 762	7700859086	7.0	12.06	38.3	F-1	B
8069.601	IN-EX	Primastar Autobus DCi 80	F9Q 762	M889393	7.0	12.06	38.3	F-1	B
8069.601	IN-EX	Primastar Autobus DCi 80	F9Q 762	M889393	7.0	12.06	38.3	F-1	B
8069.601	IN-EX	Primastar Autobus DCi 80	F9Q 762	M889393	7.0	12.06	38.3	F-1	B
8157.601	IN-EX	PRIMASTAR Bus (X83), dCi 140	G9U 730	8200562080	6.0	11.07	40.5	F	B
8083.101	IN-EX	Primastar Furgonato 2.0	F4R 720	7700109151	5.5	11.07	40.6	A	B
8069.601	IN-EX	Primastar Furgonato DCi 100	F9Q 760	7700859086	7.0	12.06	38.3	F-1	B
8069.601	IN-EX	Primastar Furgonato DCi 100	F9Q 760	7700859086	7.0	12.06	38.3	F-1	B
8069.601	IN-EX	Primastar Furgonato DCi 100	F9Q 760	7700859086	7.0	12.06	38.3	F-1	B
8069.601	IN-EX	Primastar Furgonato DCi 100	F9Q 760	M889393	7.0	12.06	38.3	F-1	B
8069.601	IN-EX	Primastar Furgonato DCi 100	F9Q 760	M889393	7.0	12.06	38.3	F-1	B
8069.601	IN-EX	Primastar Furgonato DCi 100	F9Q 760	M889393	7.0	12.06	38.3	F-1	B
8069.601	IN-EX	Primastar Furgonato DCi 80	F9Q 762	7700859086	7.0	12.06	38.3	F-1	B
8069.601	IN-EX	Primastar Furgonato DCi 80	F9Q 762	7700859086	7.0	12.06	38.3	F-1	B
8069.601	IN-EX	Primastar Furgonato DCi 80	F9Q 762	7700859086	7.0	12.06	38.3	F-1	B
8069.601	IN-EX	Primastar Furgonato DCi 80	F9Q 762	M889393	7.0	12.06	38.3	F-1	B
8069.601	IN-EX	Primastar Furgonato DCi 80	F9Q 762	M889393	7.0	12.06	38.3	F-1	B
8069.601	IN-EX	Primastar Furgonato DCi 80	F9Q 762	M889393	7.0	12.06	38.3	F-1	B
8157.601	IN-EX	PRIMASTAR Kasten (X83), dCi 1	G9U 730	8200562080	6.0	11.07	40.5	F	B
8033.900	IN	PRIMERA (P10), 1.6	GA16DE	1321253Y60	5.5	9.51	40.0	P	G1
8031.900	EX	PRIMERA (P10), 1.6	GA16DE	1321353Y60	5.5	9.51	40.0	P-6	G1
8033.900	IN	PRIMERA (P10), 1.6	GA16DS	1321253Y60	5.5	9.51	40.0	P	G1
8033.900	IN	PRIMERA (P10), 1.6	GA16DS	1321253Y60	5.5	9.51	40.0	P	G1
8031.900	EX	PRIMERA (P10), 1.6	GA16DS	1321353Y60	5.5	9.51	40.0	P-6	G1
8031.900	EX	PRIMERA (P10), 1.6	GA16DS	1321353Y60	5.5	9.51	40.0	P-6	G1
8169.600	IN	PRIMERA (P10), 2.0 D	CD20		7.0	11.03	45.0	F	G
8033.900	IN	PRIMERA (P11), 1.6 16V	GA16DE	1321253Y60	5.5	9.51	40.0	P	G1
8033.900	IN	PRIMERA (P11), 1.6 16V	GA16DE	1321253Y60	5.5	9.51	40.0	P	G1
8031.900	EX	PRIMERA (P11), 1.6 16V	GA16DE	1321353Y60	5.5	9.51	40.0	P-6	G1
8031.900	EX	PRIMERA (P11), 1.6 16V	GA16DE	1321353Y60	5.5	9.51	40.0	P-6	G1
8033.900	IN	PRIMERA (P11), 1.6 16V	QG16DE	1321253Y60	5.5	9.51	40.0	P	G1
8031.900	EX	PRIMERA (P11), 1.6 16V	QG16DE	1321353Y60	5.5	9.51	40.0	P-6	G1

(D1) Internal diameter, (D2) External diameter, (B) Shape, (C) Material

VALVE GUIDES

IVT Ref.	Type	Model	Engine	OEM Ref.	D1	D2	Length	B	C
NISSAN									
8033.900	IN	PRIMERA (P11), 1.8 16V	QG18DE	1321253Y60	5.5	9.51	40.0	P	G1
8031.900	EX	PRIMERA (P11), 1.8 16V	QG18DE	1321353Y60	5.5	9.51	40.0	P-6	G1
8169.600	IN	PRIMERA (P11), 2.0 TD	CD20T		7.0	11.03	45.0	F	G
8033.900	IN	PRIMERA (P12), 1.6	QG16DE	1321253Y60	5.5	9.51	40.0	P	G1
8033.900	IN	PRIMERA (P12), 1.6	QG16DE	1321253Y60	5.5	9.51	40.0	P	G1
8031.900	EX	PRIMERA (P12), 1.6	QG16DE	1321353Y60	5.5	9.51	40.0	P-6	G1
8031.900	EX	PRIMERA (P12), 1.6	QG16DE	1321353Y60	5.5	9.51	40.0	P-6	G1
8033.900	IN	PRIMERA (P12), 1.8	QG18DE	1321253Y60	5.5	9.51	40.0	P	G1
8031.900	EX	PRIMERA (P12), 1.8	QG18DE	1321353Y60	5.5	9.51	40.0	P-6	G1
8202.904	IN	PRIMERA (P12), 2.0	QR20DE	132128P360	6.0	10.03	41.8	P	S03
8203.904	EX	PRIMERA (P12), 2.0	QR20DE	132136N260	6.0	10.03	44.0	P-6	S03
8172.900	IN	PRIMERA (P12), 2.2 dCi	YD22DDT	13212AD260	6.0	10.03	59.7	P	G1
8173.904	EX	PRIMERA (P12), 2.2 dCi	YD22DDT	13213AD260	6.0	10.03	44.2	P	S03
8172.900	IN	PRIMERA (P12), 2.2 Di	YD22DDT	13212AD260	6.0	10.03	59.7	P	G1
8173.904	EX	PRIMERA (P12), 2.2 Di	YD22DDT	13213AD260	6.0	10.03	44.2	P	S03
8033.900	IN	PRIMERA Hatchback (P10), 1.6	GA16DS	1321253Y60	5.5	9.51	40.0	P	G1
8031.900	EX	PRIMERA Hatchback (P10), 1.6	GA16DS	1321353Y60	5.5	9.51	40.0	P-6	G1
8033.900	IN	PRIMERA Hatchback (P11), 1.6 1	GA16DE	1321253Y60	5.5	9.51	40.0	P	G1
8033.900	IN	PRIMERA Hatchback (P11), 1.6 1	GA16DE	1321253Y60	5.5	9.51	40.0	P	G1
8031.900	EX	PRIMERA Hatchback (P11), 1.6 1	GA16DE	1321353Y60	5.5	9.51	40.0	P-6	G1
8031.900	EX	PRIMERA Hatchback (P11), 1.6 1	GA16DE	1321353Y60	5.5	9.51	40.0	P-6	G1
8033.900	IN	PRIMERA Hatchback (P11), 1.6 1	QG16DE	1321253Y60	5.5	9.51	40.0	P	G1
8031.900	EX	PRIMERA Hatchback (P11), 1.6 1	QG16DE	1321353Y60	5.5	9.51	40.0	P-6	G1
8033.900	IN	PRIMERA Hatchback (P11), 1.8 1	QG18DE	1321253Y60	5.5	9.51	40.0	P	G1
8031.900	EX	PRIMERA Hatchback (P11), 1.8 1	QG18DE	1321353Y60	5.5	9.51	40.0	P-6	G1
8169.600	IN	PRIMERA Hatchback (P11), 2.0 T	CD20T		7.0	11.03	45.0	F	G
8033.900	IN	PRIMERA Hatchback (P12), 1.6	QG16DE	1321253Y60	5.5	9.51	40.0	P	G1
8033.900	IN	PRIMERA Hatchback (P12), 1.6	QG16DE	1321253Y60	5.5	9.51	40.0	P	G1
8031.900	EX	PRIMERA Hatchback (P12), 1.6	QG16DE	1321353Y60	5.5	9.51	40.0	P-6	G1
8031.900	EX	PRIMERA Hatchback (P12), 1.6	QG16DE	1321353Y60	5.5	9.51	40.0	P-6	G1
8033.900	IN	PRIMERA Hatchback (P12), 1.8	QG18DE	1321253Y60	5.5	9.51	40.0	P	G1
8031.900	EX	PRIMERA Hatchback (P12), 1.8	QG18DE	1321353Y60	5.5	9.51	40.0	P-6	G1
8202.904	IN	PRIMERA Hatchback (P12), 2.0	QR20DE	132128P360	6.0	10.03	41.8	P	S03
8203.904	EX	PRIMERA Hatchback (P12), 2.0	QR20DE	132136N260	6.0	10.03	44.0	P-6	S03
8172.900	IN	PRIMERA Hatchback (P12), 2.2 d	YD22DDT	13212AD260	6.0	10.03	59.7	P	G1
8173.904	EX	PRIMERA Hatchback (P12), 2.2 d	YD22DDT	13213AD260	6.0	10.03	44.2	P	S03
8172.900	IN	PRIMERA Hatchback (P12), 2.2 D	YD22DDT	13212AD260	6.0	10.03	59.7	P	G1
8173.904	EX	PRIMERA Hatchback (P12), 2.2 D	YD22DDT	13213AD260	6.0	10.03	44.2	P	S03
8033.900	IN	PRIMERA Kombi (WP12), 1.6 Visi	QG16DE	1321253Y60	5.5	9.51	40.0	P	G1
8031.900	EX	PRIMERA Kombi (WP12), 1.6 Visi	QG16DE	1321353Y60	5.5	9.51	40.0	P-6	G1
8033.900	IN	PRIMERA Kombi (WP12), 1.8	QG18DE	1321253Y60	5.5	9.51	40.0	P	G1
8031.900	EX	PRIMERA Kombi (WP12), 1.8	QG18DE	1321353Y60	5.5	9.51	40.0	P-6	G1
8202.904	IN	PRIMERA Kombi (WP12), 2.0	QR20DE	132128P360	6.0	10.03	41.8	P	S03
8203.904	EX	PRIMERA Kombi (WP12), 2.0	QR20DE	132136N260	6.0	10.03	44.0	P-6	S03
8172.900	IN	PRIMERA Kombi (WP12), 2.2 dCi	YD22DDT	13212AD260	6.0	10.03	59.7	P	G1
8173.904	EX	PRIMERA Kombi (WP12), 2.2 dCi	YD22DDT	13213AD260	6.0	10.03	44.2	P	S03
8172.900	IN	PRIMERA Kombi (WP12), 2.2 Di	YD22DDT	13212AD260	6.0	10.03	59.7	P	G1
8173.904	EX	PRIMERA Kombi (WP12), 2.2 Di	YD22DDT	13213AD260	6.0	10.03	44.2	P	S03
8033.900	IN	PRIMERA Traveller (W10), 1.6 i	GA16DE	1321253Y60	5.5	9.51	40.0	P	G1
8031.900	EX	PRIMERA Traveller (W10), 1.6 i	GA16DE	1321353Y60	5.5	9.51	40.0	P-6	G1
8033.900	IN	PRIMERA Traveller (W10), 1.6 i	GA16DS	1321253Y60	5.5	9.51	40.0	P	G1
8031.900	EX	PRIMERA Traveller (W10), 1.6 i	GA16DS	1321353Y60	5.5	9.51	40.0	P-6	G1
8169.600	IN	PRIMERA Traveller (W10), 2.0 D	CD20		7.0	11.03	45.0	F	G
8033.900	IN	PRIMERA Traveller (WP11), 1.6 1	GA16DE	1321253Y60	5.5	9.51	40.0	P	G1
8033.900	IN	PRIMERA Traveller (WP11), 1.6 1	GA16DE	1321253Y60	5.5	9.51	40.0	P	G1
8031.900	EX	PRIMERA Traveller (WP11), 1.6 1	GA16DE	1321353Y60	5.5	9.51	40.0	P-6	G1
8031.900	EX	PRIMERA Traveller (WP11), 1.6 1	GA16DE	1321353Y60	5.5	9.51	40.0	P-6	G1
8033.900	IN	PRIMERA Traveller (WP11), 1.8 1	QG18DE	1321253Y60	5.5	9.51	40.0	P	G1
8031.900	EX	PRIMERA Traveller (WP11), 1.8 1	QG18DE	1321353Y60	5.5	9.51	40.0	P-6	G1
8169.600	IN	PRIMERA Traveller (WP11), 2.0 T	CD20T		7.0	11.03	45.0	F	G
8035.601	IN-EX	QASHQAI / QASHQAI +2 (J10, JJ	K9K 410		6.0	11.07	40.5	F	B
8035.601	IN-EX	QASHQAI / QASHQAI +2 (J10, JJ	K9K 430		6.0	11.07	40.5	F	B

(D1) Internal diameter, (D2) External diameter, (B) Shape, (C) Material

VALVE GUIDES

IVT Ref.	Type	Model	Engine	OEM Ref.	D1	D2	Length	B	C
NISSAN									
8035.601	IN-EX	QASHQAI / QASHQAI +2 (J10, JJ	K9K 764/K9K 732		6.0	11.07	40.5	F	B
8200.904	IN	QASHQAI / QASHQAI +2 (J10, JJ	HR16DE	13212ED060	5.0	9.03	42.2	P-3	S03
8200.904	IN	QASHQAI / QASHQAI +2 (J10, JJ	HR16DE	13212ED060	5.0	9.03	42.2	P-3	S03
8201.904	EX	QASHQAI / QASHQAI +2 (J10, JJ	HR16DE	13213ED060	5.0	9.03	42.2	P-6	S03
8201.904	EX	QASHQAI / QASHQAI +2 (J10, JJ	HR16DE	13213ED060	5.0	9.03	42.2	P-6	S03
8202.904	IN	QASHQAI / QASHQAI +2 (J10, JJ	MR20DE	132128P360	6.0	10.03	41.8	P	S03
8203.904	EX	QASHQAI / QASHQAI +2 (J10, JJ	MR20DE	132136N260	6.0	10.03	44.0	P-6	S03
8202.904	IN	QASHQAI / QASHQAI +2 (J10, JJ	MR20DE	132128P360	6.0	10.03	41.8	P	S03
8203.904	EX	QASHQAI / QASHQAI +2 (J10, JJ	MR20DE	132136N260	6.0	10.03	44.0	P-6	S03
8033.900	IN	SERENA (C23M), 1.6 16V	GA16DE	1321253Y60	5.5	9.51	40.0	P	G1
8031.900	EX	SERENA (C23M), 1.6 16V	GA16DE	1321353Y60	5.5	9.51	40.0	P-6	G1
8169.600	IN	SILVIA (S110), 1.8	L18E		7.0	11.03	45.0	F	G
8169.600	IN	STANZA (T11), 1.6	CA16S		7.0	11.03	45.0	F	G
8169.600	IN	STANZA Hatchback (T11), 1.6	CA16S		7.0	11.03	45.0	F	G
8169.600	IN	SUNNY I (B11), 1.7 D	CD17		7.0	11.03	45.0	F	G
8169.600	IN	SUNNY I Traveller (B11), 1.7 D	CD17		7.0	11.03	45.0	F	G
8033.900	IN	SUNNY II (N13), 1.4 LX	GA14S	1321253Y60	5.5	9.51	40.0	P	G1
8031.900	EX	SUNNY II (N13), 1.4 LX	GA14S	1321353Y60	5.5	9.51	40.0	P-6	G1
8169.600	IN	SUNNY II (N13), 1.6 GTI 16V	CA16D		7.0	11.03	45.0	F	G
8033.900	IN	SUNNY II (N13), 1.6 i 12V	GA16i	1321253Y60	5.5	9.51	40.0	P	G1
8031.900	EX	SUNNY II (N13), 1.6 i 12V	GA16i	1321353Y60	5.5	9.51	40.0	P-6	G1
8169.600	IN	SUNNY II (N13), 1.7 D	CD17		7.0	11.03	45.0	F	G
8169.600	IN	SUNNY II Coupe (B12), 1.6 GTI 1	CA16D		7.0	11.03	45.0	F	G
8033.900	IN	SUNNY II Coupe (B12), 1.6 i 12V	GA16i	1321253Y60	5.5	9.51	40.0	P	G1
8031.900	EX	SUNNY II Coupe (B12), 1.6 i 12V	GA16i	1321353Y60	5.5	9.51	40.0	P-6	G1
8169.600	IN	SUNNY II Coupe (B12), 1.8 GTI 1	CA18D		7.0	11.03	45.0	F	G
8033.900	IN	SUNNY II Hatchback (N13), 1.4 L	GA14S	1321253Y60	5.5	9.51	40.0	P	G1
8031.900	EX	SUNNY II Hatchback (N13), 1.4 L	GA14S	1321353Y60	5.5	9.51	40.0	P-6	G1
8169.600	IN	SUNNY II Hatchback (N13), 1.6 G	CA16D		7.0	11.03	45.0	F	G
8033.900	IN	SUNNY II Hatchback (N13), 1.6 i	GA16i	1321253Y60	5.5	9.51	40.0	P	G1
8031.900	EX	SUNNY II Hatchback (N13), 1.6 i	GA16i	1321353Y60	5.5	9.51	40.0	P-6	G1
8169.600	IN	SUNNY II Hatchback (N13), 1.7 D	CD17		7.0	11.03	45.0	F	G
8169.600	IN	SUNNY II Hatchback (N13), 1.8 G	CA18D		7.0	11.03	45.0	F	G
8033.900	IN	SUNNY II Traveller (B12), 1.6 i 12	GA16i	1321253Y60	5.5	9.51	40.0	P	G1
8031.900	EX	SUNNY II Traveller (B12), 1.6 i 12	GA16i	1321353Y60	5.5	9.51	40.0	P-6	G1
8033.900	IN	SUNNY II Traveller (B12), 1.6 i 12	GA16i	1321253Y60	5.5	9.51	40.0	P	G1
8031.900	EX	SUNNY II Traveller (B12), 1.6 i 12	GA16i	1321353Y60	5.5	9.51	40.0	P-6	G1
8169.600	IN	SUNNY II Traveller (B12), 1.7 D	CD17		7.0	11.03	45.0	F	G
8033.900	IN	SUNNY III (N14), 1.4 i	GA14DE /GA14DS	1321253Y60	5.5	9.51	40.0	P	G1
8031.900	EX	SUNNY III (N14), 1.4 i	GA14DE /GA14DS	1321353Y60	5.5	9.51	40.0	P-6	G1
8033.900	IN	SUNNY III (N14), 1.4 i 16V	GA14DE	1321253Y60	5.5	9.51	40.0	P	G1
8031.900	EX	SUNNY III (N14), 1.4 i 16V	GA14DE	1321353Y60	5.5	9.51	40.0	P-6	G1
8033.900	IN	SUNNY III (N14), 1.6 i	GA16DE/GA16DEL/GA16DS	1321253Y60	5.5	9.51	40.0	P	G1
8031.900	EX	SUNNY III (N14), 1.6 i	GA16DE/GA16DEL/GA16DS	1321353Y60	5.5	9.51	40.0	P-6	G1
8033.900	IN	SUNNY III (N14), 1.6 i 16V	GA16DE	1321253Y60	5.5	9.51	40.0	P	G1
8031.900	EX	SUNNY III (N14), 1.6 i 16V	GA16DE	1321353Y60	5.5	9.51	40.0	P-6	G1
8033.900	IN	SUNNY III (N14), 1.6 i 16V 4WD	GA16DS	1321253Y60	5.5	9.51	40.0	P	G1
8031.900	EX	SUNNY III (N14), 1.6 i 16V 4WD	GA16DS	1321353Y60	5.5	9.51	40.0	P-6	G1
8169.600	IN	SUNNY III (N14), 2.0 D	CD20		7.0	11.03	45.0	F	G
8033.900	IN	SUNNY III Hatchback (N14), 1.4 i	GA14DE /GA14DS	1321253Y60	5.5	9.51	40.0	P	G1
8031.900	EX	SUNNY III Hatchback (N14), 1.4 i	GA14DE /GA14DS	1321353Y60	5.5	9.51	40.0	P-6	G1
8033.900	IN	SUNNY III Hatchback (N14), 1.4 i	GA14DE	1321253Y60	5.5	9.51	40.0	P	G1
8031.900	EX	SUNNY III Hatchback (N14), 1.4 i	GA14DE	1321353Y60	5.5	9.51	40.0	P-6	G1
8033.900	IN	SUNNY III Hatchback (N14), 1.6 i	GA16DE/GA16DEL/GA16DS	1321253Y60	5.5	9.51	40.0	P	G1
8031.900	EX	SUNNY III Hatchback (N14), 1.6 i	GA16DE/GA16DEL/GA16DS	1321353Y60	5.5	9.51	40.0	P-6	G1
8033.900	IN	SUNNY III Hatchback (N14), 1.6 i	GA16DE	1321253Y60	5.5	9.51	40.0	P	G1
8031.900	EX	SUNNY III Hatchback (N14), 1.6 i	GA16DE	1321353Y60	5.5	9.51	40.0	P-6	G1
8033.900	IN	SUNNY III Hatchback (N14), 1.6 i	GA16DE	1321253Y60	5.5	9.51	40.0	P	G1
8031.900	EX	SUNNY III Hatchback (N14), 1.6 i	GA16DE	1321353Y60	5.5	9.51	40.0	P-6	G1
8169.600	IN	SUNNY III Hatchback (N14), 2.0 D	CD20		7.0	11.03	45.0	F	G
8033.900	IN	SUNNY III Kasten (Y10), 1.6 i 16V	GA16DE	1321253Y60	5.5	9.51	40.0	P	G1
8031.900	EX	SUNNY III Kasten (Y10), 1.6 i 16V	GA16DE	1321353Y60	5.5	9.51	40.0	P-6	G1

(D1) Internal diameter, (D2) External diameter, (B) Shape, (C) Material

VALVE GUIDES

IVT Ref.	Type	Model	Engine	OEM Ref.	D1	D2	Length	B	C
NISSAN									
8169.600	IN	SUNNY III Kasten (Y10), 1.7 D	CD17		7.0	11.03	45.0	F	G
8033.900	IN	SUNNY III Liftback (N14), 1.4 i	GA14DE /GA14DS	1321253Y60	5.5	9.51	40.0	P	G1
8031.900	EX	SUNNY III Liftback (N14), 1.4 i	GA14DE /GA14DS	1321353Y60	5.5	9.51	40.0	P-6	G1
8033.900	IN	SUNNY III Liftback (N14), 1.6 i	GA16DE/GA16DEL/GA16DS	1321253Y60	5.5	9.51	40.0	P	G1
8031.900	EX	SUNNY III Liftback (N14), 1.6 i	GA16DE/GA16DEL/GA16DS	1321353Y60	5.5	9.51	40.0	P-6	G1
8169.600	IN	SUNNY III Liftback (N14), 2.0 D	CD20		7.0	11.03	45.0	F	G
8033.900	IN	SUNNY III Traveller (Y10), 1.6 16	GA16DS	1321253Y60	5.5	9.51	40.0	P	G1
8031.900	EX	SUNNY III Traveller (Y10), 1.6 16	GA16DS	1321353Y60	5.5	9.51	40.0	P-6	G1
8033.900	IN	SUNNY III Traveller (Y10), 1.6 i	GA16DE/GA16DS	1321253Y60	5.5	9.51	40.0	P	G1
8031.900	EX	SUNNY III Traveller (Y10), 1.6 i	GA16DE/GA16DS	1321353Y60	5.5	9.51	40.0	P-6	G1
8033.900	IN	SUNNY III Traveller (Y10), 1.6 i 16	GA16DE	1321253Y60	5.5	9.51	40.0	P	G1
8031.900	EX	SUNNY III Traveller (Y10), 1.6 i 16	GA16DE	1321353Y60	5.5	9.51	40.0	P-6	G1
8169.600	IN	SUNNY III Traveller (Y10), 2.0 D	CD20		7.0	11.03	45.0	F	G
8205.900	IN-EX	TERRANO II (R20), 3.0 Di 4WD	ZD30		7.0	11.03	45.0	P-6	G
8035.601	IN-EX	TIIDA Schrägheck (C11X), 1.5 dCi	K9K 728		6.0	11.07	40.5	F	B
8200.904	IN	TIIDA Schrägheck (C11X), 1.6	HR16DE	13212ED060	5.0	9.03	42.2	P-3	S03
8201.904	EX	TIIDA Schrägheck (C11X), 1.6	HR16DE	13213ED060	5.0	9.03	42.2	P-6	S03
8035.601	IN-EX	TIIDA Stufenheck (SC11X), 1.5 d	K9K		6.0	11.07	40.5	F	B
8200.904	IN	TIIDA Stufenheck (SC11X), 1.6	HR16DE	13212ED060	5.0	9.03	42.2	P-3	S03
8201.904	EX	TIIDA Stufenheck (SC11X), 1.6	HR16DE	13213ED060	5.0	9.03	42.2	P-6	S03
8033.900	IN	VANETTE CARGO Bus (HC 23),	GA16DE	1321253Y60	5.5	9.51	40.0	P	G1
8031.900	EX	VANETTE CARGO Bus (HC 23),	GA16DE	1321353Y60	5.5	9.51	40.0	P-6	G1
8033.900	IN	VANETTE CARGO Kasten (HC 2	GA16DE	1321253Y60	5.5	9.51	40.0	P	G1
8031.900	EX	VANETTE CARGO Kasten (HC 2	GA16DE	1321353Y60	5.5	9.51	40.0	P-6	G1
8202.904	IN	X-TRAIL (T30), 2.0	QR20DE	132128P360	6.0	10.03	41.8	P	S03
8203.904	EX	X-TRAIL (T30), 2.0	QR20DE	132136N260	6.0	10.03	44.0	P-6	S03
8202.904	IN	X-TRAIL (T30), 2.0 4x4	QR20DE	132128P360	6.0	10.03	41.8	P	S03
8203.904	EX	X-TRAIL (T30), 2.0 4x4	QR20DE	132136N260	6.0	10.03	44.0	P-6	S03
8172.900	IN	X-TRAIL (T30), 2.2 dCi	YD22DDTi	13212AD260	6.0	10.03	59.7	P	G1
8173.904	EX	X-TRAIL (T30), 2.2 dCi	YD22DDTi	13213AD260	6.0	10.03	44.2	P	S03
8172.900	IN	X-TRAIL (T30), 2.2 dCi 4x4	YD22DDTi	13212AD260	6.0	10.03	59.7	P	G1
8173.904	EX	X-TRAIL (T30), 2.2 dCi 4x4	YD22DDTi	13213AD260	6.0	10.03	44.2	P	S03
8172.900	IN	X-TRAIL (T30), 2.2 Di 4x4	YD22ETI	13212AD260	6.0	10.03	59.7	P	G1
8173.904	EX	X-TRAIL (T30), 2.2 Di 4x4	YD22ETI	13213AD260	6.0	10.03	44.2	P	S03
8202.904	IN	X-TRAIL (T30), 2.5 4x4	QR25DE	132128P360	6.0	10.03	41.8	P	S03
8203.904	EX	X-TRAIL (T30), 2.5 4x4	QR25DE	132136N260	6.0	10.03	44.0	P-6	S03
8202.904	IN	X-TRAIL (T31), 2.0	MR20DE	132128P360	6.0	10.03	41.8	P	S03
8202.904	IN	X-TRAIL (T31), 2.0	MR20DE	132128P360	6.0	10.03	41.8	P	S03
8203.904	EX	X-TRAIL (T31), 2.0	MR20DE	132136N260	6.0	10.03	44.0	P-6	S03
8203.904	EX	X-TRAIL (T31), 2.0	MR20DE	132136N260	6.0	10.03	44.0	P-6	S03
8202.904	IN	X-TRAIL (T31), 2.0 FWD	MR20DE	132128P360	6.0	10.03	41.8	P	S03
8202.904	IN	X-TRAIL (T31), 2.0 FWD	MR20DE	132128P360	6.0	10.03	41.8	P	S03
8203.904	EX	X-TRAIL (T31), 2.0 FWD	MR20DE	132136N260	6.0	10.03	44.0	P-6	S03
8203.904	EX	X-TRAIL (T31), 2.0 FWD	MR20DE	132136N260	6.0	10.03	44.0	P-6	S03
8202.904	IN	X-TRAIL (T31), 2.5 4x4	QR25DE	132128P360	6.0	10.03	41.8	P	S03
8203.904	EX	X-TRAIL (T31), 2.5 4x4	QR25DE	132136N260	6.0	10.03	44.0	P-6	S03
OPEL									
8040.605	IN-EX	AGILA (A) (H00), 1.0	Z 10 XEP	9158589	5.0	10.03	39.0	F	S06
8040.605	IN-EX	AGILA (A) (H00), 1.0 12V	Z 10 XE	9158589	5.0	10.03	39.0	F	S06
8040.605	IN-EX	AGILA (A) (H00), 1.2 16V	Z 12 XE	9158589	5.0	10.03	39.0	F	S06
8040.605	IN-EX	AGILA (A) (H00), 1.2 16V Twinpor	Z 12 XEP	9158589	5.0	10.03	39.0	F	S06
8167.604	IN-EX	AGILA (B) (H08), 1.0	K10B	93194080	5.5	10.6	34.0	F	S03
8167.604	IN-EX	AGILA (B) (H08), 1.0	K10B	93194080	5.5	10.6	34.0	F	S03
8167.604	IN-EX	AGILA (B) (H08), 1.2	K12B	93194080	5.5	10.6	34.0	F	S03
8167.604	IN-EX	AGILA (B) (H08), 1.2	K12B	93194080	5.5	10.6	34.0	F	S03
8141.100	IN-EX	ARENA Bus, 2.5 D	25 DG/25 DM	4726483	8.0	13.03	60.0	A	G1
8141.100	IN-EX	ARENA Combi (THB), 2.5 D	S8U 780/S8U 782/S8U 758	4726483	8.0	13.03	60.0	A	G1
8095.600	IN-EX	Arena Combi 2.5 D	S8U 758	4749395	8.0	13.03	56.0	F	G1
8095.600	IN-EX	Arena Combi 2.5 D	S8U 780	4749395	8.0	13.03	56.0	F	G1
8095.600	IN-EX	Arena Furgonato 2.5 D	S8U 758	4749395	8.0	13.03	56.0	F	G1
8095.600	IN-EX	Arena Furgonato 2.5 D	S8U 780	4749395	8.0	13.03	56.0	F	G1

(D1) Internal diameter, (D2) External diameter, (B) Shape, (C) Material

VALVE GUIDES

OPEL

IVT Ref.	Type	Model	Engine	OEM Ref.	D1	D2	Length	B	C
8141.100	IN-EX	ARENA Kasten (TB, TF), 2.5 D	S8U 780/S8U 782/S8U 758	4726483	8.0	13.03	60.0	A	G1
8141.100	IN-EX	ARENA Kasten, 2.5 D	25 DG/25 DM	4726483	8.0	13.03	60.0	A	G1
8039.105	IN-EX	ASCONA A (81_, 86_, 87_, 88_),	12 S		7.0	11.03	45.8	A1	S06
8020.100	IN-EX	ASCONA A (81_, 86_, 87_, 88_),	12 S		7.0	11.03	45.8	A1	G
8020.100	IN-EX	ASCONA B (81_, 86_, 87_, 88_),	12 N		7.0	11.03	45.8	A1	G
8039.105	IN-EX	ASCONA B (81_, 86_, 87_, 88_),	12 N		7.0	11.03	45.8	A1	S06
8039.105	IN-EX	ASCONA B (81_, 86_, 87_, 88_),	12 S		7.0	11.03	45.8	A1	S06
8020.100	IN-EX	ASCONA B (81_, 86_, 87_, 88_),	12 S		7.0	11.03	45.8	A1	G
8020.100	IN-EX	ASCONA B (81_, 86_, 87_, 88_),	13 N		7.0	11.03	45.8	A1	G
8039.105	IN-EX	ASCONA B (81_, 86_, 87_, 88_),	13 N		7.0	11.03	45.8	A1	S06
8020.100	IN-EX	ASCONA B (81_, 86_, 87_, 88_),	13 S		7.0	11.03	45.8	A1	G
8039.105	IN-EX	ASCONA B (81_, 86_, 87_, 88_),	13 S		7.0	11.03	45.8	A1	S06
8020.100	IN-EX	ASCONA C (81_, 86_, 87_, 88_),	13 S		7.0	11.03	45.8	A1	G
8039.105	IN-EX	ASCONA C (81_, 86_, 87_, 88_),	13 S		7.0	11.03	45.8	A1	S06
8020.100	IN-EX	ASCONA C (81_, 86_, 87_, 88_),	16 SV		7.0	11.03	45.8	A1	G
8039.105	IN-EX	ASCONA C (81_, 86_, 87_, 88_),	16 SV		7.0	11.03	45.8	A1	S06
8176.100	IN-EX	ASCONA C (81_, 86_, 87_, 88_),	16 DA/16 D	0642008	8.0	12.05	50.0	A-1	G
8039.105	IN-EX	ASCONA C (81_, 86_, 87_, 88_),	E 16 NZ/E 16 LZ		7.0	11.03	45.8	A1	S06
8020.100	IN-EX	ASCONA C (81_, 86_, 87_, 88_),	E 16 NZ/E 16 LZ		7.0	11.03	45.8	A1	G
8020.100	IN-EX	ASCONA C (81_, 86_, 87_, 88_),	C 16 NZ/C 16 LZ		7.0	11.03	45.8	A1	G
8039.105	IN-EX	ASCONA C (81_, 86_, 87_, 88_),	C 16 NZ/C 16 LZ		7.0	11.03	45.8	A1	S06
8039.105	IN-EX	ASCONA C (81_, 86_, 87_, 88_),	E 18 NV		7.0	11.03	45.8	A1	S06
8020.100	IN-EX	ASCONA C (81_, 86_, 87_, 88_),	E 18 NV		7.0	11.03	45.8	A1	G
8039.105	IN-EX	ASCONA C (81_, 86_, 87_, 88_),	20 NE		7.0	11.03	45.8	A1	S06
8020.100	IN-EX	ASCONA C (81_, 86_, 87_, 88_),	20 NE		7.0	11.03	45.8	A1	G
8020.100	IN-EX	ASCONA C (81_, 86_, 87_, 88_),	C 20 NEF		7.0	11.03	45.8	A1	G
8039.105	IN-EX	ASCONA C (81_, 86_, 87_, 88_),	C 20 NEF		7.0	11.03	45.8	A1	S06
8039.105	IN-EX	ASCONA C (81_, 86_, 87_, 88_),	20 SEH		7.0	11.03	45.8	A1	S06
8020.100	IN-EX	ASCONA C (81_, 86_, 87_, 88_),	20 SEH		7.0	11.03	45.8	A1	G
8020.100	IN-EX	ASCONA C (81_, 86_, 87_, 88_),	C 20 NE		7.0	11.03	45.8	A1	G
8039.105	IN-EX	ASCONA C (81_, 86_, 87_, 88_),	C 20 NE		7.0	11.03	45.8	A1	S06
8020.100	IN-EX	ASCONA C CC (84_, 89_), 1.3 S	13 S		7.0	11.03	45.8	A1	G
8039.105	IN-EX	ASCONA C CC (84_, 89_), 1.3 S	13 S		7.0	11.03	45.8	A1	S06
8039.105	IN-EX	ASCONA C CC (84_, 89_), 1.6	16 SV		7.0	11.03	45.8	A1	S06
8020.100	IN-EX	ASCONA C CC (84_, 89_), 1.6	16 SV		7.0	11.03	45.8	A1	G
8176.100	IN-EX	ASCONA C CC (84_, 89_), 1.6 D	16 DA/16 D	0642008	8.0	12.05	50.0	A-1	G
8039.105	IN-EX	ASCONA C CC (84_, 89_), 1.6 i	E 16 NZ		7.0	11.03	45.8	A1	S06
8020.100	IN-EX	ASCONA C CC (84_, 89_), 1.6 i	E 16 NZ		7.0	11.03	45.8	A1	G
8039.105	IN-EX	ASCONA C CC (84_, 89_), 1.6 i K	C 16 NZ/C 16 LZ		7.0	11.03	45.8	A1	S06
8020.100	IN-EX	ASCONA C CC (84_, 89_), 1.6 i K	C 16 NZ/C 16 LZ		7.0	11.03	45.8	A1	G
8039.105	IN-EX	ASCONA C CC (84_, 89_), 1.8	E 18 NV		7.0	11.03	45.8	A1	S06
8020.100	IN-EX	ASCONA C CC (84_, 89_), 1.8	E 18 NV		7.0	11.03	45.8	A1	G
8020.100	IN-EX	ASCONA C CC (84_, 89_), 2.0 i	20 NE		7.0	11.03	45.8	A1	G
8039.105	IN-EX	ASCONA C CC (84_, 89_), 2.0 i	20 NE		7.0	11.03	45.8	A1	S06
8020.100	IN-EX	ASCONA C CC (84_, 89_), 2.0 i G	20 SEH		7.0	11.03	45.8	A1	G
8039.105	IN-EX	ASCONA C CC (84_, 89_), 2.0 i G	20 SEH		7.0	11.03	45.8	A1	S06
8039.105	IN-EX	ASCONA C CC (84_, 89_), 2.0 i K	C 20 NE		7.0	11.03	45.8	A1	S06
8020.100	IN-EX	ASCONA C CC (84_, 89_), 2.0 i K	C 20 NE		7.0	11.03	45.8	A1	G
8039.105	IN-EX	ASTRA F (56_, 57_), 1.4	14 NV		7.0	11.03	45.8	A1	S06
8020.100	IN-EX	ASTRA F (56_, 57_), 1.4	14 NV		7.0	11.03	45.8	A1	G
8039.105	IN-EX	ASTRA F (56_, 57_), 1.4	14 SE		7.0	11.03	45.8	A1	S06
8020.100	IN-EX	ASTRA F (56_, 57_), 1.4	14 SE		7.0	11.03	45.8	A1	G
8039.105	IN-EX	ASTRA F (56_, 57_), 1.4 i	C 14 NZ/X 14 NZ		7.0	11.03	45.8	A1	S06
8020.100	IN-EX	ASTRA F (56_, 57_), 1.4 i	C 14 NZ/X 14 NZ		7.0	11.03	45.8	A1	G
8027.600	IN-EX	ASTRA F (56_, 57_), 1.4 i 16V	X 14 XE		6.0	10.03	45.0	F	G1
8039.105	IN-EX	ASTRA F (56_, 57_), 1.4 Si	C 14 SE		7.0	11.03	45.8	A1	S06
8020.100	IN-EX	ASTRA F (56_, 57_), 1.4 Si	C 14 SE		7.0	11.03	45.8	A1	G
8020.100	IN-EX	ASTRA F (56_, 57_), 1.6	16 NZR/16 LZ2		7.0	11.03	45.8	A1	G
8039.105	IN-EX	ASTRA F (56_, 57_), 1.6	16 NZR/16 LZ2		7.0	11.03	45.8	A1	S06
8020.100	IN-EX	ASTRA F (56_, 57_), 1.6 i	C 16 NZ/X 16 SZR		7.0	11.03	45.8	A1	G
8039.105	IN-EX	ASTRA F (56_, 57_), 1.6 i	C 16 NZ/X 16 SZR		7.0	11.03	45.8	A1	S06
8039.105	IN-EX	ASTRA F (56_, 57_), 1.6 i	X 16 SZ		7.0	11.03	45.8	A1	S06

(D1) Internal diameter, (D2) External diameter, (B) Shape, (C) Material

VALVE GUIDES

OPEL

IVT Ref.	Type	Model	Engine	OEM Ref.	D1	D2	Length	B	C
8020.100	IN-EX	ASTRA F (56_, 57_), 1.6 i	X 16 SZ		7.0	11.03	45.8	A1	G
8027.600	IN-EX	ASTRA F (56_, 57_), 1.6 i 16V	X 16 XEL		6.0	10.03	45.0	F	G1
8020.100	IN-EX	ASTRA F (56_, 57_), 1.6 Si	C 16 SE		7.0	11.03	45.8	A1	G
8039.105	IN-EX	ASTRA F (56_, 57_), 1.6 Si	C 16 SE		7.0	11.03	45.8	A1	S06
8176.100	IN-EX	ASTRA F (56_, 57_), 1.7 D	17 D	0642008	8.0	12.05	50.0	A-1	G
8176.100	IN-EX	ASTRA F (56_, 57_), 1.7 D	17 DR	0642008	8.0	12.05	50.0	A-1	G
8176.100	IN-EX	ASTRA F (56_, 57_), 1.7 TD	X 17 DTL	0642008	8.0	12.05	50.0	A-1	G
8020.100	IN-EX	ASTRA F (56_, 57_), 1.8 i	C 18 NZ		7.0	11.03	45.8	A1	G
8039.105	IN-EX	ASTRA F (56_, 57_), 1.8 i	C 18 NZ		7.0	11.03	45.8	A1	S06
8027.600	IN-EX	ASTRA F (56_, 57_), 1.8 i 16V	C 18 SEL		6.0	10.03	45.0	F	G1
8027.600	IN-EX	ASTRA F (56_, 57_), 1.8 i 16V	C 18 XE		6.0	10.03	45.0	F	G1
8027.600	IN-EX	ASTRA F (56_, 57_), 1.8 i 16V	C 18 XEL/X 18 XE		6.0	10.03	45.0	F	G1
8039.105	IN-EX	ASTRA F (56_, 57_), 2.0 i	C 20 NE		7.0	11.03	45.8	A1	S06
8020.100	IN-EX	ASTRA F (56_, 57_), 2.0 i	C 20 NE		7.0	11.03	45.8	A1	G
8027.600	IN-EX	ASTRA F (56_, 57_), 2.0 i 16V	X 20 XEV		6.0	10.03	45.0	F	G1
8029.600	IN-EX	ASTRA F (56_, 57_), 2.0 i 16V	X 20 XEV		6.0	11.07	40.5	F	B
8027.600	IN-EX	ASTRA F Cabriolet (53_B), 1.4 i 1	X 14 XE		6.0	10.03	45.0	F	G1
8039.105	IN-EX	ASTRA F Cabriolet (53_B), 1.4 Si	C 14 SE		7.0	11.03	45.8	A1	S06
8020.100	IN-EX	ASTRA F Cabriolet (53_B), 1.4 Si	C 14 SE		7.0	11.03	45.8	A1	G
8020.100	IN-EX	ASTRA F Cabriolet (53_B), 1.6 i	X 16 SZ		7.0	11.03	45.8	A1	G
8039.105	IN-EX	ASTRA F Cabriolet (53_B), 1.6 i	X 16 SZ		7.0	11.03	45.8	A1	S06
8039.105	IN-EX	ASTRA F Cabriolet (53_B), 1.6 i	X 16 SZR		7.0	11.03	45.8	A1	S06
8020.100	IN-EX	ASTRA F Cabriolet (53_B), 1.6 i	X 16 SZR		7.0	11.03	45.8	A1	G
8027.600	IN-EX	ASTRA F Cabriolet (53_B), 1.8 i 1	C 18 XEL/X 18 XE		6.0	10.03	45.0	F	G1
8039.105	IN-EX	ASTRA F Cabriolet (53_B), 2.0 i	C 20 NE		7.0	11.03	45.8	A1	S06
8020.100	IN-EX	ASTRA F Cabriolet (53_B), 2.0 i	C 20 NE		7.0	11.03	45.8	A1	G
8020.100	IN-EX	ASTRA F Caravan (51_, 52_), 1.4	14 NV		7.0	11.03	45.8	A1	G
8039.105	IN-EX	ASTRA F Caravan (51_, 52_), 1.4	14 NV		7.0	11.03	45.8	A1	S06
8039.105	IN-EX	ASTRA F Caravan (51_, 52_), 1.4	C 14 NZ		7.0	11.03	45.8	A1	S06
8020.100	IN-EX	ASTRA F Caravan (51_, 52_), 1.4	C 14 NZ		7.0	11.03	45.8	A1	G
8027.600	IN-EX	ASTRA F Caravan (51_, 52_), 1.4	X 14 XE		6.0	10.03	45.0	F	G1
8039.105	IN-EX	ASTRA F Caravan (51_, 52_), 1.4	C 14 SE		7.0	11.03	45.8	A1	S06
8020.100	IN-EX	ASTRA F Caravan (51_, 52_), 1.4	C 14 SE		7.0	11.03	45.8	A1	G
8020.100	IN-EX	ASTRA F Caravan (51_, 52_), 1.6	16 NZR/16 LZ2		7.0	11.03	45.8	A1	G
8039.105	IN-EX	ASTRA F Caravan (51_, 52_), 1.6	16 NZR/16 LZ2		7.0	11.03	45.8	A1	S06
8039.105	IN-EX	ASTRA F Caravan (51_, 52_), 1.6	C 16 NZ/X 16 SZR		7.0	11.03	45.8	A1	S06
8020.100	IN-EX	ASTRA F Caravan (51_, 52_), 1.6	C 16 NZ/X 16 SZR		7.0	11.03	45.8	A1	G
8039.105	IN-EX	ASTRA F Caravan (51_, 52_), 1.6	X 16 SZ		7.0	11.03	45.8	A1	S06
8020.100	IN-EX	ASTRA F Caravan (51_, 52_), 1.6	X 16 SZ		7.0	11.03	45.8	A1	G
8027.600	IN-EX	ASTRA F Caravan (51_, 52_), 1.6	X 16 XEL		6.0	10.03	45.0	F	G1
8020.100	IN-EX	ASTRA F Caravan (51_, 52_), 1.6	C 16 SE		7.0	11.03	45.8	A1	G
8039.105	IN-EX	ASTRA F Caravan (51_, 52_), 1.6	C 16 SE		7.0	11.03	45.8	A1	S06
8176.100	IN-EX	ASTRA F Caravan (51_, 52_), 1.7	17 D	0642008	8.0	12.05	50.0	A-1	G
8176.100	IN-EX	ASTRA F Caravan (51_, 52_), 1.7	17 DR	0642008	8.0	12.05	50.0	A-1	G
8176.100	IN-EX	ASTRA F Caravan (51_, 52_), 1.7	X 17 DTL	0642008	8.0	12.05	50.0	A-1	G
8039.105	IN-EX	ASTRA F Caravan (51_, 52_), 1.8	C 18 NZ		7.0	11.03	45.8	A1	S06
8020.100	IN-EX	ASTRA F Caravan (51_, 52_), 1.8	C 18 NZ		7.0	11.03	45.8	A1	G
8027.600	IN-EX	ASTRA F Caravan (51_, 52_), 1.8	C 18 XE		6.0	10.03	45.0	F	G1
8027.600	IN-EX	ASTRA F Caravan (51_, 52_), 1.8	C 18 XEL/X 18 XE		6.0	10.03	45.0	F	G1
8020.100	IN-EX	ASTRA F Caravan (51_, 52_), 2.0	C 20 NE		7.0	11.03	45.8	A1	G
8039.105	IN-EX	ASTRA F Caravan (51_, 52_), 2.0	C 20 NE		7.0	11.03	45.8	A1	S06
8029.600	IN-EX	ASTRA F Caravan (51_, 52_), 2.0	X 20 XEV		6.0	11.07	40.5	F	B
8027.600	IN-EX	ASTRA F Caravan (51_, 52_), 2.0	X 20 XEV		6.0	10.03	45.0	F	G1
8020.100	IN-EX	ASTRA F CC (53_, 54_, 58_, 59_)	14 NV		7.0	11.03	45.8	A1	G
8039.105	IN-EX	ASTRA F CC (53_, 54_, 58_, 59_)	14 NV		7.0	11.03	45.8	A1	S06
8020.100	IN-EX	ASTRA F CC (53_, 54_, 58_, 59_)	C 14 NZ		7.0	11.03	45.8	A1	G
8039.105	IN-EX	ASTRA F CC (53_, 54_, 58_, 59_)	C 14 NZ		7.0	11.03	45.8	A1	S06
8027.600	IN-EX	ASTRA F CC (53_, 54_, 58_, 59_)	X 14 XE		6.0	10.03	45.0	F	G1
8020.100	IN-EX	ASTRA F CC (53_, 54_, 58_, 59_)	C 14 SE		7.0	11.03	45.8	A1	G
8039.105	IN-EX	ASTRA F CC (53_, 54_, 58_, 59_)	C 14 SE		7.0	11.03	45.8	A1	S06
8020.100	IN-EX	ASTRA F CC (53_, 54_, 58_, 59_)	16 NZR/16 LZ2		7.0	11.03	45.8	A1	G
8039.105	IN-EX	ASTRA F CC (53_, 54_, 58_, 59_)	16 NZR/16 LZ2		7.0	11.03	45.8	A1	S06

(D1) Internal diameter, (D2) External diameter, (B) Shape, (C) Material

VALVE GUIDES

OPEL

IVT Ref.	Type	Model	Engine	OEM Ref.	D1	D2	Length	B	C
8020.100	IN-EX	ASTRA F CC (53_, 54_, 58_, 59_)	X 16 SZ		7.0	11.03	45.8	A1	G
8039.105	IN-EX	ASTRA F CC (53_, 54_, 58_, 59_)	X 16 SZ		7.0	11.03	45.8	A1	S06
8027.600	IN-EX	ASTRA F CC (53_, 54_, 58_, 59_)	X 16 XEL		6.0	10.03	45.0	F	G1
8020.100	IN-EX	ASTRA F CC (53_, 54_, 58_, 59_)	C 16 SE		7.0	11.03	45.8	A1	G
8039.105	IN-EX	ASTRA F CC (53_, 54_, 58_, 59_)	C 16 SE		7.0	11.03	45.8	A1	S06
8176.100	IN-EX	ASTRA F CC (53_, 54_, 58_, 59_)	17 D	0642008	8.0	12.05	50.0	A-1	G
8176.100	IN-EX	ASTRA F CC (53_, 54_, 58_, 59_)	17 DR	0642008	8.0	12.05	50.0	A-1	G
8176.100	IN-EX	ASTRA F CC (53_, 54_, 58_, 59_)	X 17 DTL	0642008	8.0	12.05	50.0	A-1	G
8020.100	IN-EX	ASTRA F CC (53_, 54_, 58_, 59_)	C 18 NZ		7.0	11.03	45.8	A1	G
8039.105	IN-EX	ASTRA F CC (53_, 54_, 58_, 59_)	C 18 NZ		7.0	11.03	45.8	A1	S06
8027.600	IN-EX	ASTRA F CC (53_, 54_, 58_, 59_)	C 18 XE		6.0	10.03	45.0	F	G1
8027.600	IN-EX	ASTRA F CC (53_, 54_, 58_, 59_)	C 18 XEL/X 18 XE		6.0	10.03	45.0	F	G1
8039.105	IN-EX	ASTRA F CC (53_, 54_, 58_, 59_)	C 20 NE		7.0	11.03	45.8	A1	S06
8020.100	IN-EX	ASTRA F CC (53_, 54_, 58_, 59_)	C 20 NE		7.0	11.03	45.8	A1	G
8027.600	IN-EX	ASTRA F CC (53_, 54_, 58_, 59_)	X 20 XEV		6.0	10.03	45.0	F	G1
8029.600	IN-EX	ASTRA F CC (53_, 54_, 58_, 59_)	X 20 XEV		6.0	11.07	40.5	F	B
8039.105	IN-EX	ASTRA F CLASSIC Caravan, 1.4 i	X 14 NZ		7.0	11.03	45.8	A1	S06
8020.100	IN-EX	ASTRA F CLASSIC Caravan, 1.4 i	X 14 NZ		7.0	11.03	45.8	A1	G
8027.600	IN-EX	ASTRA F CLASSIC Caravan, 1.6 i	X 16 XEL		6.0	10.03	45.0	F	G1
8020.100	IN-EX	ASTRA F CLASSIC CC, 1.4 i	X 14 NZ		7.0	11.03	45.8	A1	G
8039.105	IN-EX	ASTRA F CLASSIC CC, 1.4 i	X 14 NZ		7.0	11.03	45.8	A1	S06
8027.600	IN-EX	ASTRA F CLASSIC CC, 1.6 i 16V	X 16 XEL		6.0	10.03	45.0	F	G1
8020.100	IN-EX	ASTRA F CLASSIC Stufenheck, 1	X 14 NZ		7.0	11.03	45.8	A1	G
8039.105	IN-EX	ASTRA F CLASSIC Stufenheck, 1	X 14 NZ		7.0	11.03	45.8	A1	S06
8020.100	IN-EX	ASTRA F CLASSIC Stufenheck, 1	X 16 SZR		7.0	11.03	45.8	A1	G
8039.105	IN-EX	ASTRA F CLASSIC Stufenheck, 1	X 16 SZR		7.0	11.03	45.8	A1	S06
8027.600	IN-EX	ASTRA F CLASSIC Stufenheck, 1	X 16 XEL		6.0	10.03	45.0	F	G1
8020.100	IN-EX	ASTRA F Van (55_), 1.4 i	C 14 NZ		7.0	11.03	45.8	A1	G
8039.105	IN-EX	ASTRA F Van (55_), 1.4 i	C 14 NZ		7.0	11.03	45.8	A1	S06
8039.105	IN-EX	ASTRA F Van (55_), 1.6 i	C 16 NZ		7.0	11.03	45.8	A1	S06
8020.100	IN-EX	ASTRA F Van (55_), 1.6 i	C 16 NZ		7.0	11.03	45.8	A1	G
8039.105	IN-EX	ASTRA F Van (55_), 1.6 i	X 16 SZ		7.0	11.03	45.8	A1	S06
8020.100	IN-EX	ASTRA F Van (55_), 1.6 i	X 16 SZ		7.0	11.03	45.8	A1	G
8027.600	IN-EX	ASTRA F Van (55_), 1.6 i 16V	X 16 XEL		6.0	10.03	45.0	F	G1
8176.100	IN-EX	ASTRA F Van (55_), 1.7 D	17 D	0642008	8.0	12.05	50.0	A-1	G
8176.100	IN-EX	ASTRA F Van (55_), 1.7 D	17 DR	0642008	8.0	12.05	50.0	A-1	G
8176.100	IN-EX	ASTRA F Van (55_), 1.7 TD	X 17 DTL	0642008	8.0	12.05	50.0	A-1	G
8027.600	IN-EX	ASTRA G Cabriolet (F67), 1.6 16V	Z 16 XE		6.0	10.03	45.0	F	G1
8040.605	IN-EX	ASTRA G Cabriolet (F67), 1.8 16V	Z 18 XE	9158589	5.0	10.03	39.0	F	S06
8027.600	IN-EX	ASTRA G Cabriolet (F67), 2.0 16V	Z 20 LET		6.0	10.03	45.0	F	G1
8029.600	IN-EX	ASTRA G Cabriolet (F67), 2.0 16V	Z 20 LET		6.0	11.07	40.5	F	B
8029.600	IN-EX	ASTRA G Cabriolet (F67), 2.0 OP	Z 20 LET		6.0	11.07	40.5	F	B
8027.600	IN-EX	ASTRA G Cabriolet (F67), 2.0 OP	Z 20 LET		6.0	10.03	45.0	F	G1
8130.104	IN-EX	ASTRA G Cabriolet (F67), 2.2 16V	Z 22 SE	9006082	6.0	10.03	36.0	A	S03
8130.104	IN-EX	ASTRA G Cabriolet (F67), 2.2 16V	Z 22 SE	90537248	6.0	10.03	36.0	A	S03
8137.605	IN-EX	ASTRA G Cabriolet (F67), 2.2 DTI	Y 22 DTR	4500633	6.0	10.03	45.0	F	S06
8137.605	IN-EX	ASTRA G Cabriolet (F67), 2.2 DTI	Y 22 DTR	4770269	6.0	10.03	45.0	F	S06
8137.605	IN-EX	ASTRA G Cabriolet (F67), 2.2 DTI	Y 22 DTR	642063	6.0	10.03	45.0	F	S06
8137.605	IN-EX	ASTRA G Cabriolet (F67), 2.2 DTI	Y 22 DTR	9106309	6.0	10.03	45.0	F	S06
8040.605	IN-EX	ASTRA G Caravan (F35_), 1.2 16	X 12 XE	9158589	5.0	10.03	39.0	F	S06
8040.605	IN-EX	ASTRA G Caravan (F35_), 1.2 16	Z 12 XE	9158589	5.0	10.03	39.0	F	S06
8027.600	IN-EX	ASTRA G Caravan (F35_), 1.4 16	X 14 XE/Z 14 XE		6.0	10.03	45.0	F	G1
8039.105	IN-EX	ASTRA G Caravan (F35_), 1.6	X 16 SZR		7.0	11.03	45.8	A1	S06
8020.100	IN-EX	ASTRA G Caravan (F35_), 1.6	X 16 SZR		7.0	11.03	45.8	A1	G
8027.600	IN-EX	ASTRA G Caravan (F35_), 1.6 16	Z 16 XE/X 16 XEL		6.0	10.03	45.0	F	G1
8176.100	IN-EX	ASTRA G Caravan (F35_), 1.7 CD	Z 17 DTL	0642008	8.0	12.05	50.0	A-1	G
8133.600	IN-EX	ASTRA G Caravan (F35_), 1.7 DT	Y 17 DT	12204PLZD00	6.0	11.05	42.0	F	G1
8176.100	IN-EX	ASTRA G Caravan (F35_), 1.7 TD	X 17 DTL	0642008	8.0	12.05	50.0	A-1	G
8027.600	IN-EX	ASTRA G Caravan (F35_), 1.8 16	X 18 XE1		6.0	10.03	45.0	F	G1
8040.605	IN-EX	ASTRA G Caravan (F35_), 1.8 16	Z 18 XE	9158589	5.0	10.03	39.0	F	S06
8027.600	IN-EX	ASTRA G Caravan (F35_), 2.0 16	X 20 XEV		6.0	10.03	45.0	F	G1
8029.600	IN-EX	ASTRA G Caravan (F35_), 2.0 16	X 20 XEV		6.0	11.07	40.5	F	B

(D1) Internal diameter, (D2) External diameter, (B) Shape, (C) Material

VALVE GUIDES

OPEL

IVT Ref.	Type	Model	Engine	OEM Ref.	D1	D2	Length	B	C
8137.605	IN-EX	ASTRA G Caravan (F35_), 2.0 DI	X 20 DTL/Y 20 DTL	4500633	6.0	10.03	45.0	F	S06
8137.605	IN-EX	ASTRA G Caravan (F35_), 2.0 DI	X 20 DTL/Y 20 DTL	4770269	6.0	10.03	45.0	F	S06
8137.605	IN-EX	ASTRA G Caravan (F35_), 2.0 DI	X 20 DTL/Y 20 DTL	642063	6.0	10.03	45.0	F	S06
8137.605	IN-EX	ASTRA G Caravan (F35_), 2.0 DI	X 20 DTL/Y 20 DTL	9106309	6.0	10.03	45.0	F	S06
8137.605	IN-EX	ASTRA G Caravan (F35_), 2.0 DT	Y 20 DTH/X 20 DTH	4500633	6.0	10.03	45.0	F	S06
8137.605	IN-EX	ASTRA G Caravan (F35_), 2.0 DT	Y 20 DTH/X 20 DTH	4770269	6.0	10.03	45.0	F	S06
8137.605	IN-EX	ASTRA G Caravan (F35_), 2.0 DT	Y 20 DTH/X 20 DTH	642063	6.0	10.03	45.0	F	S06
8137.605	IN-EX	ASTRA G Caravan (F35_), 2.0 DT	Y 20 DTH/X 20 DTH	9106309	6.0	10.03	45.0	F	S06
8029.600	IN-EX	ASTRA G Caravan (F35_), 2.0 OP	Z 20 LET		6.0	11.07	40.5	F	B
8029.600	IN-EX	ASTRA G Caravan (F35_), 2.0 OP	Z 20 LET		6.0	11.07	40.5	F	B
8027.600	IN-EX	ASTRA G Caravan (F35_), 2.0 OP	Z 20 LET		6.0	10.03	45.0	F	G1
8027.600	IN-EX	ASTRA G Caravan (F35_), 2.0 OP	Z 20 LET		6.0	10.03	45.0	F	G1
8130.104	IN-EX	ASTRA G Caravan (F35_), 2.2 16	Z 22 SE	9006082	6.0	10.03	36.0	A	S03
8130.104	IN-EX	ASTRA G Caravan (F35_), 2.2 16	Z 22 SE	90537248	6.0	10.03	36.0	A	S03
8137.605	IN-EX	ASTRA G Caravan (F35_), 2.2 DT	Y 22 DTR	4500633	6.0	10.03	45.0	F	S06
8137.605	IN-EX	ASTRA G Caravan (F35_), 2.2 DT	Y 22 DTR	4500633	6.0	10.03	45.0	F	S06
8137.605	IN-EX	ASTRA G Caravan (F35_), 2.2 DT	Y 22 DTR	4770269	6.0	10.03	45.0	F	S06
8137.605	IN-EX	ASTRA G Caravan (F35_), 2.2 DT	Y 22 DTR	4770269	6.0	10.03	45.0	F	S06
8137.605	IN-EX	ASTRA G Caravan (F35_), 2.2 DT	Y 22 DTR	642063	6.0	10.03	45.0	F	S06
8137.605	IN-EX	ASTRA G Caravan (F35_), 2.2 DT	Y 22 DTR	642063	6.0	10.03	45.0	F	S06
8137.605	IN-EX	ASTRA G Caravan (F35_), 2.2 DT	Y 22 DTR	9106309	6.0	10.03	45.0	F	S06
8137.605	IN-EX	ASTRA G Caravan (F35_), 2.2 DT	Y 22 DTR	9106309	6.0	10.03	45.0	F	S06
8040.605	IN-EX	ASTRA G CC (F48_, F08_), 1.2 1	X 12 XE	9158589	5.0	10.03	39.0	F	S06
8040.605	IN-EX	ASTRA G CC (F48_, F08_), 1.2 1	Z 12 XE	9158589	5.0	10.03	39.0	F	S06
8027.600	IN-EX	ASTRA G CC (F48_, F08_), 1.4 1	X 14 XE/Z 14 XE		6.0	10.03	45.0	F	G1
8039.105	IN-EX	ASTRA G CC (F48_, F08_), 1.6	X 16 SZR		7.0	11.03	45.8	A1	S06
8020.100	IN-EX	ASTRA G CC (F48_, F08_), 1.6	X 16 SZR		7.0	11.03	45.8	A1	G
8027.600	IN-EX	ASTRA G CC (F48_, F08_), 1.6 1	Z 16 XE/X 16 XEL/C 16 SEL		6.0	10.03	45.0	F	G1
8176.100	IN-EX	ASTRA G CC (F48_, F08_), 1.7 C	Z 17 DTL	0642008	8.0	12.05	50.0	A-1	G
8133.600	IN-EX	ASTRA G CC (F48_, F08_), 1.7 D	Y 17 DT	12204PLZD00	6.0	11.05	42.0	F	G1
8176.100	IN-EX	ASTRA G CC (F48_, F08_), 1.7 T	X 17 DTL	0642008	8.0	12.05	50.0	A-1	G
8027.600	IN-EX	ASTRA G CC (F48_, F08_), 1.8 1	X 18 XE1		6.0	10.03	45.0	F	G1
8040.605	IN-EX	ASTRA G CC (F48_, F08_), 1.8 1	Z 18 XE	9158589	5.0	10.03	39.0	F	S06
8029.600	IN-EX	ASTRA G CC (F48_, F08_), 2.0 1	X 20 XEV/C 20 SEL		6.0	11.07	40.5	F	B
8027.600	IN-EX	ASTRA G CC (F48_, F08_), 2.0 1	X 20 XEV/C 20 SEL		6.0	10.03	45.0	F	G1
8137.605	IN-EX	ASTRA G CC (F48_, F08_), 2.0 DI	X 20 DTL/Y 20 DTL	4500633	6.0	10.03	45.0	F	S06
8137.605	IN-EX	ASTRA G CC (F48_, F08_), 2.0 DI	X 20 DTL/Y 20 DTL	4770269	6.0	10.03	45.0	F	S06
8137.605	IN-EX	ASTRA G CC (F48_, F08_), 2.0 DI	X 20 DTL/Y 20 DTL	642063	6.0	10.03	45.0	F	S06
8137.605	IN-EX	ASTRA G CC (F48_, F08_), 2.0 DI	X 20 DTL/Y 20 DTL	9106309	6.0	10.03	45.0	F	S06
8137.605	IN-EX	ASTRA G CC (F48_, F08_), 2.0 D	Y 20 DTH/X 20 DTH	4500633	6.0	10.03	45.0	F	S06
8137.605	IN-EX	ASTRA G CC (F48_, F08_), 2.0 D	Y 20 DTH/X 20 DTH	4770269	6.0	10.03	45.0	F	S06
8137.605	IN-EX	ASTRA G CC (F48_, F08_), 2.0 D	Y 20 DTH/X 20 DTH	642063	6.0	10.03	45.0	F	S06
8137.605	IN-EX	ASTRA G CC (F48_, F08_), 2.0 D	Y 20 DTH/X 20 DTH	9106309	6.0	10.03	45.0	F	S06
8029.600	IN-EX	ASTRA G CC (F48_, F08_), 2.0 O	Z 20 LET		6.0	11.07	40.5	F	B
8029.600	IN-EX	ASTRA G CC (F48_, F08_), 2.0 O	Z 20 LET		6.0	11.07	40.5	F	B
8027.600	IN-EX	ASTRA G CC (F48_, F08_), 2.0 O	Z 20 LET		6.0	10.03	45.0	F	G1
8027.600	IN-EX	ASTRA G CC (F48_, F08_), 2.0 O	Z 20 LET		6.0	10.03	45.0	F	G1
8130.104	IN-EX	ASTRA G CC (F48_, F08_), 2.2 1	Z 22 SE	9006082	6.0	10.03	36.0	A	S03
8130.104	IN-EX	ASTRA G CC (F48_, F08_), 2.2 1	Z 22 SE	90537248	6.0	10.03	36.0	A	S03
8137.605	IN-EX	ASTRA G CC (F48_, F08_), 2.2 D	Y 22 DTR	4500633	6.0	10.03	45.0	F	S06
8137.605	IN-EX	ASTRA G CC (F48_, F08_), 2.2 D	Y 22 DTR	4500633	6.0	10.03	45.0	F	S06
8137.605	IN-EX	ASTRA G CC (F48_, F08_), 2.2 D	Y 22 DTR	4770269	6.0	10.03	45.0	F	S06
8137.605	IN-EX	ASTRA G CC (F48_, F08_), 2.2 D	Y 22 DTR	4770269	6.0	10.03	45.0	F	S06
8137.605	IN-EX	ASTRA G CC (F48_, F08_), 2.2 D	Y 22 DTR	642063	6.0	10.03	45.0	F	S06
8137.605	IN-EX	ASTRA G CC (F48_, F08_), 2.2 D	Y 22 DTR	642063	6.0	10.03	45.0	F	S06
8137.605	IN-EX	ASTRA G CC (F48_, F08_), 2.2 D	Y 22 DTR	9106309	6.0	10.03	45.0	F	S06
8137.605	IN-EX	ASTRA G CC (F48_, F08_), 2.2 D	Y 22 DTR	9106309	6.0	10.03	45.0	F	S06
8027.600	IN-EX	ASTRA G Coupe (F07_), 1.6 16V	Z 16 XE		6.0	10.03	45.0	F	G1
8027.600	IN-EX	ASTRA G Coupe (F07_), 1.8 16V	X 18 XE1		6.0	10.03	45.0	F	G1
8040.605	IN-EX	ASTRA G Coupe (F07_), 1.8 16V	Z 18 XE	9158589	5.0	10.03	39.0	F	S06
8027.600	IN-EX	ASTRA G Coupe (F07_), 2.0 16V	Z 20 LET		6.0	10.03	45.0	F	G1
8029.600	IN-EX	ASTRA G Coupe (F07_), 2.0 16V	Z 20 LET		6.0	11.07	40.5	F	B

(D1) Internal diameter, (D2) External diameter, (B) Shape, (C) Material

VALVE GUIDES

OPEL

IVT Ref.	Type	Model	Engine	OEM Ref.	D1	D2	Length	B	C
8029.600	IN-EX	ASTRA G Coupe (F07_), 2.0 16V	Z 20 LET		6.0	11.07	40.5	F	B
8029.600	IN-EX	ASTRA G Coupe (F07_), 2.0 16V	Z 20 LET		6.0	11.07	40.5	F	B
8027.600	IN-EX	ASTRA G Coupe (F07_), 2.0 16V	Z 20 LET		6.0	10.03	45.0	F	G1
8027.600	IN-EX	ASTRA G Coupe (F07_), 2.0 16V	Z 20 LET		6.0	10.03	45.0	F	G1
8130.104	IN-EX	ASTRA G Coupe (F07_), 2.2 16V	Z 22 SE	9006082	6.0	10.03	36.0	A	S03
8130.104	IN-EX	ASTRA G Coupe (F07_), 2.2 16V	Z 22 SE	90537248	6.0	10.03	36.0	A	S03
8137.605	IN-EX	ASTRA G Coupe (F07_), 2.2 DTI	Y 22 DTR	4500633	6.0	10.03	45.0	F	S06
8137.605	IN-EX	ASTRA G Coupe (F07_), 2.2 DTI	Y 22 DTR	4770269	6.0	10.03	45.0	F	S06
8137.605	IN-EX	ASTRA G Coupe (F07_), 2.2 DTI	Y 22 DTR	642063	6.0	10.03	45.0	F	S06
8137.605	IN-EX	ASTRA G Coupe (F07_), 2.2 DTI	Y 22 DTR	9106309	6.0	10.03	45.0	F	S06
8039.105	IN-EX	ASTRA G Kasten (F70), 1.6	X 16 SZR		7.0	11.03	45.8	A1	S06
8020.100	IN-EX	ASTRA G Kasten (F70), 1.6	X 16 SZR		7.0	11.03	45.8	A1	G
8133.600	IN-EX	ASTRA G Kasten (F70), 1.7 DTI 1	Y 17 DT	12204PLZD00	6.0	11.05	42.0	F	G1
8176.100	IN-EX	ASTRA G Kasten (F70), 1.7 TD	X 17 DTL	0642008	8.0	12.05	50.0	A-1	G
8137.605	IN-EX	ASTRA G Kasten (F70), 2.0 DI	X 20 DTL	4500633	6.0	10.03	45.0	F	S06
8137.605	IN-EX	ASTRA G Kasten (F70), 2.0 DI	X 20 DTL	4770269	6.0	10.03	45.0	F	S06
8137.605	IN-EX	ASTRA G Kasten (F70), 2.0 DI	X 20 DTL	642063	6.0	10.03	45.0	F	S06
8137.605	IN-EX	ASTRA G Kasten (F70), 2.0 DI	X 20 DTL	9106309	6.0	10.03	45.0	F	S06
8040.605	IN-EX	ASTRA G Stufenheck (F69_), 1.2	X 12 XE	9158589	5.0	10.03	39.0	F	S06
8040.605	IN-EX	ASTRA G Stufenheck (F69_), 1.2	Z 12 XE	9158589	5.0	10.03	39.0	F	S06
8027.600	IN-EX	ASTRA G Stufenheck (F69_), 1.4	X 14 XE/Z 14 XE		6.0	10.03	45.0	F	G1
8020.100	IN-EX	ASTRA G Stufenheck (F69_), 1.6	X 16 SZR		7.0	11.03	45.8	A1	G
8039.105	IN-EX	ASTRA G Stufenheck (F69_), 1.6	X 16 SZR		7.0	11.03	45.8	A1	S06
8027.600	IN-EX	ASTRA G Stufenheck (F69_), 1.6	Z 16 XE/X 16 XEL		6.0	10.03	45.0	F	G1
8176.100	IN-EX	ASTRA G Stufenheck (F69_), 1.7	Z 17 DTL	0642008	8.0	12.05	50.0	A-1	G
8133.600	IN-EX	ASTRA G Stufenheck (F69_), 1.7	Y 17 DT	12204PLZD00	6.0	11.05	42.0	F	G1
8176.100	IN-EX	ASTRA G Stufenheck (F69_), 1.7	X 17 DTL	0642008	8.0	12.05	50.0	A-1	G
8027.600	IN-EX	ASTRA G Stufenheck (F69_), 1.8	X 18 XE1		6.0	10.03	45.0	F	G1
8040.605	IN-EX	ASTRA G Stufenheck (F69_), 1.8	Z 18 XE	9158589	5.0	10.03	39.0	F	S06
8027.600	IN-EX	ASTRA G Stufenheck (F69_), 2.0	X 20 XEV		6.0	10.03	45.0	F	G1
8029.600	IN-EX	ASTRA G Stufenheck (F69_), 2.0	X 20 XEV		6.0	11.07	40.5	F	B
8137.605	IN-EX	ASTRA G Stufenheck (F69_), 2.0	X 20 DTL/Y 20 DTL	4500633	6.0	10.03	45.0	F	S06
8137.605	IN-EX	ASTRA G Stufenheck (F69_), 2.0	X 20 DTL/Y 20 DTL	4770269	6.0	10.03	45.0	F	S06
8137.605	IN-EX	ASTRA G Stufenheck (F69_), 2.0	X 20 DTL/Y 20 DTL	642063	6.0	10.03	45.0	F	S06
8137.605	IN-EX	ASTRA G Stufenheck (F69_), 2.0	X 20 DTL/Y 20 DTL	9106309	6.0	10.03	45.0	F	S06
8137.605	IN-EX	ASTRA G Stufenheck (F69_), 2.0	Y 20 DTH/X 20 DTH	4500633	6.0	10.03	45.0	F	S06
8137.605	IN-EX	ASTRA G Stufenheck (F69_), 2.0	Y 20 DTH/X 20 DTH	4770269	6.0	10.03	45.0	F	S06
8137.605	IN-EX	ASTRA G Stufenheck (F69_), 2.0	Y 20 DTH/X 20 DTH	642063	6.0	10.03	45.0	F	S06
8137.605	IN-EX	ASTRA G Stufenheck (F69_), 2.0	Y 20 DTH/X 20 DTH	9106309	6.0	10.03	45.0	F	S06
8130.104	IN-EX	ASTRA G Stufenheck (F69_), 2.2	Z 22 SE	9006082	6.0	10.03	36.0	A	S03
8130.104	IN-EX	ASTRA G Stufenheck (F69_), 2.2	Z 22 SE	90537248	6.0	10.03	36.0	A	S03
8137.605	IN-EX	ASTRA G Stufenheck (F69_), 2.2	Y 22 DTR	4500633	6.0	10.03	45.0	F	S06
8137.605	IN-EX	ASTRA G Stufenheck (F69_), 2.2	Y 22 DTR	4500633	6.0	10.03	45.0	F	S06
8137.605	IN-EX	ASTRA G Stufenheck (F69_), 2.2	Y 22 DTR	4770269	6.0	10.03	45.0	F	S06
8137.605	IN-EX	ASTRA G Stufenheck (F69_), 2.2	Y 22 DTR	4770269	6.0	10.03	45.0	F	S06
8137.605	IN-EX	ASTRA G Stufenheck (F69_), 2.2	Y 22 DTR	642063	6.0	10.03	45.0	F	S06
8137.605	IN-EX	ASTRA G Stufenheck (F69_), 2.2	Y 22 DTR	642063	6.0	10.03	45.0	F	S06
8137.605	IN-EX	ASTRA G Stufenheck (F69_), 2.2	Y 22 DTR	9106309	6.0	10.03	45.0	F	S06
8137.605	IN-EX	ASTRA G Stufenheck (F69_), 2.2	Y 22 DTR	9106309	6.0	10.03	45.0	F	S06
8133.600	IN-EX	ASTRA GTC J, 1.7 CDTI	A 17 DTJ/A 17 DTC/A 17 DT	12204PLZD00	6.0	11.05	42.0	F	G1
8186.105	IN-EX	ASTRA GTC J, 2.0 CDTI	A 20 DTH	641463	5.0	10.03	46.7	A	S06
8186.105	IN-EX	ASTRA GTC J, 2.0 CDTI	A 20 DTH	642699	5.0	10.03	46.7	A	S06
8186.105	IN-EX	ASTRA GTC J, 2.0 CDTI	A 20 DTH	642700	5.0	10.03	46.7	A	S06
8186.105	IN-EX	ASTRA GTC J, 2.0 CDTI	A 20 DTH	642701	5.0	10.03	46.7	A	S06
8040.605	IN-EX	ASTRA H (L48), 1.4	Z 14 XEL	9158589	5.0	10.03	39.0	F	S06
8040.605	IN-EX	ASTRA H (L48), 1.4	Z 14 XEP	9158589	5.0	10.03	39.0	F	S06
8133.600	IN-EX	ASTRA H (L48), 1.7 CDTI	A 17 DTJ/Z 17 DTJ	12204PLZD00	6.0	11.05	42.0	F	G1
8133.600	IN-EX	ASTRA H (L48), 1.7 CDTI	A 17 DTR/Z 17 DTR	12204PLZD00	6.0	11.05	42.0	F	G1
8133.600	IN-EX	ASTRA H (L48), 1.7 CDTI	Z 17 DTH	12204PLZD00	6.0	11.05	42.0	F	G1
8176.100	IN-EX	ASTRA H (L48), 1.7 CDTI	Z 17 DTL	0642008	8.0	12.05	50.0	A-1	G
8040.605	IN-EX	ASTRA H (L48), 1.8	Z 18 XE	9158589	5.0	10.03	39.0	F	S06
8186.105	IN-EX	ASTRA H (L48), 1.9 CDTI	Z 19 DTH	641463	5.0	10.03	46.7	A	S06

(D1) Internal diameter, (D2) External diameter, (B) Shape, (C) Material

VALVE GUIDES

IVT Ref.	Type	Model	Engine	OEM Ref.	D1	D2	Length	B	C
OPEL									
8186.105	IN-EX	ASTRA H (L48), 1.9 CDTI	Z 19 DTH	642699	5.0	10.03	46.7	A	S06
8186.105	IN-EX	ASTRA H (L48), 1.9 CDTI	Z 19 DTH	642700	5.0	10.03	46.7	A	S06
8186.105	IN-EX	ASTRA H (L48), 1.9 CDTI	Z 19 DTH	642701	5.0	10.03	46.7	A	S06
8029.600	IN-EX	ASTRA H (L48), 2.0 Turbo	Z 20 LEH		6.0	11.07	40.5	F	B
8027.600	IN-EX	ASTRA H (L48), 2.0 Turbo	Z 20 LEH		6.0	10.03	45.0	F	G1
8029.600	IN-EX	ASTRA H (L48), 2.0 Turbo	Z 20 LEL		6.0	11.07	40.5	F	B
8027.600	IN-EX	ASTRA H (L48), 2.0 Turbo	Z 20 LEL		6.0	10.03	45.0	F	G1
8029.600	IN-EX	ASTRA H (L48), 2.0 Turbo	Z 20 LER		6.0	11.07	40.5	F	B
8027.600	IN-EX	ASTRA H (L48), 2.0 Turbo	Z 20 LER		6.0	10.03	45.0	F	G1
8040.605	IN-EX	ASTRA H Caravan (L35), 1.4	Z 14 XEL	9158589	5.0	10.03	39.0	F	S06
8040.605	IN-EX	ASTRA H Caravan (L35), 1.4	Z 14 XEP	9158589	5.0	10.03	39.0	F	S06
8040.605	IN-EX	ASTRA H Caravan (L35), 1.4 LPG	Z 14 XEP	9158589	5.0	10.03	39.0	F	S06
8133.600	IN-EX	ASTRA H Caravan (L35), 1.7 CDT	A 17 DTJ/Z 17 DTJ	12204PLZD00	6.0	11.05	42.0	F	G1
8133.600	IN-EX	ASTRA H Caravan (L35), 1.7 CDT	A 17 DTR/Z 17 DTR	12204PLZD00	6.0	11.05	42.0	F	G1
8133.600	IN-EX	ASTRA H Caravan (L35), 1.7 CDT	Z 17 DTH	12204PLZD00	6.0	11.05	42.0	F	G1
8176.100	IN-EX	ASTRA H Caravan (L35), 1.7 CDT	Z 17 DTL	0642008	8.0	12.05	50.0	A-1	G
8040.605	IN-EX	ASTRA H Caravan (L35), 1.8	Z 18 XE	9158589	5.0	10.03	39.0	F	S06
8186.105	IN-EX	ASTRA H Caravan (L35), 1.9 CDT	Z 19 DTH	641463	5.0	10.03	46.7	A	S06
8186.105	IN-EX	ASTRA H Caravan (L35), 1.9 CDT	Z 19 DTH	642699	5.0	10.03	46.7	A	S06
8186.105	IN-EX	ASTRA H Caravan (L35), 1.9 CDT	Z 19 DTH	642700	5.0	10.03	46.7	A	S06
8186.105	IN-EX	ASTRA H Caravan (L35), 1.9 CDT	Z 19 DTH	642701	5.0	10.03	46.7	A	S06
8027.600	IN-EX	ASTRA H Caravan (L35), 2.0 Turb	Z 20 LEL		6.0	10.03	45.0	F	G1
8029.600	IN-EX	ASTRA H Caravan (L35), 2.0 Turb	Z 20 LEL		6.0	11.07	40.5	F	B
8027.600	IN-EX	ASTRA H Caravan (L35), 2.0 Turb	Z 20 LER		6.0	10.03	45.0	F	G1
8029.600	IN-EX	ASTRA H Caravan (L35), 2.0 Turb	Z 20 LER		6.0	11.07	40.5	F	B
8040.605	IN-EX	ASTRA H GTC (L08), 1.4	Z 14 XEL	9158589	5.0	10.03	39.0	F	S06
8040.605	IN-EX	ASTRA H GTC (L08), 1.4	Z 14 XEP	9158589	5.0	10.03	39.0	F	S06
8133.600	IN-EX	ASTRA H GTC (L08), 1.7 CDTI	A 17 DTJ	12204PLZD00	6.0	11.05	42.0	F	G1
8133.600	IN-EX	ASTRA H GTC (L08), 1.7 CDTI	A 17 DTR	12204PLZD00	6.0	11.05	42.0	F	G1
8133.600	IN-EX	ASTRA H GTC (L08), 1.7 CDTi	Z 17 DTH	12204PLZD00	6.0	11.05	42.0	F	G1
8176.100	IN-EX	ASTRA H GTC (L08), 1.7 CDTI	Z 17 DTL	0642008	8.0	12.05	50.0	A-1	G
8040.605	IN-EX	ASTRA H GTC (L08), 1.8	Z 18 XE	9158589	5.0	10.03	39.0	F	S06
8186.105	IN-EX	ASTRA H GTC (L08), 1.9 CDTi	Z 19 DTH	641463	5.0	10.03	46.7	A	S06
8186.105	IN-EX	ASTRA H GTC (L08), 1.9 CDTi	Z 19 DTH	642699	5.0	10.03	46.7	A	S06
8186.105	IN-EX	ASTRA H GTC (L08), 1.9 CDTi	Z 19 DTH	642700	5.0	10.03	46.7	A	S06
8186.105	IN-EX	ASTRA H GTC (L08), 1.9 CDTi	Z 19 DTH	642701	5.0	10.03	46.7	A	S06
8029.600	IN-EX	ASTRA H GTC (L08), 2.0 Turbo	Z 20 LEH		6.0	11.07	40.5	F	B
8027.600	IN-EX	ASTRA H GTC (L08), 2.0 Turbo	Z 20 LEH		6.0	10.03	45.0	F	G1
8029.600	IN-EX	ASTRA H GTC (L08), 2.0 Turbo	Z 20 LEL		6.0	11.07	40.5	F	B
8027.600	IN-EX	ASTRA H GTC (L08), 2.0 Turbo	Z 20 LEL		6.0	10.03	45.0	F	G1
8027.600	IN-EX	ASTRA H GTC (L08), 2.0 Turbo	Z 20 LER		6.0	10.03	45.0	F	G1
8029.600	IN-EX	ASTRA H GTC (L08), 2.0 Turbo	Z 20 LER		6.0	11.07	40.5	F	B
8186.105	IN-EX	ASTRA H Kasten (L70), 1.9 CDTI	Z 19 DTH	641463	5.0	10.03	46.7	A	S06
8186.105	IN-EX	ASTRA H Kasten (L70), 1.9 CDTI	Z 19 DTH	642699	5.0	10.03	46.7	A	S06
8186.105	IN-EX	ASTRA H Kasten (L70), 1.9 CDTI	Z 19 DTH	642700	5.0	10.03	46.7	A	S06
8186.105	IN-EX	ASTRA H Kasten (L70), 1.9 CDTI	Z 19 DTH	642701	5.0	10.03	46.7	A	S06
8133.600	IN-EX	ASTRA H Stufenheck (L69), 1.7 C	A 17 DTR/Z 17 DTR	12204PLZD00	6.0	11.05	42.0	F	G1
8133.600	IN-EX	ASTRA H Stufenheck (L69), 1.7 C	Z 17 DTJ	12204PLZD00	6.0	11.05	42.0	F	G1
8040.605	IN-EX	ASTRA H TwinTop (L67), 1.8	Z 18 XE	9158589	5.0	10.03	39.0	F	S06
8027.600	IN-EX	ASTRA H TwinTop (L67), 2.0 Turb	Z 20 LEL		6.0	10.03	45.0	F	G1
8029.600	IN-EX	ASTRA H TwinTop (L67), 2.0 Turb	Z 20 LEL		6.0	11.07	40.5	F	B
8027.600	IN-EX	ASTRA H TwinTop (L67), 2.0 Turb	Z 20 LER		6.0	10.03	45.0	F	G1
8029.600	IN-EX	ASTRA H TwinTop (L67), 2.0 Turb	Z 20 LER		6.0	11.07	40.5	F	B
8133.600	IN-EX	ASTRA J Sports Tourer, 1.7 CDTI	A 17 DTJ/A 17 DTC/A 17 DT	12204PLZD00	6.0	11.05	42.0	F	G1
8133.600	IN-EX	ASTRA J Sports Tourer, 1.7 CDTI	A 17 DTR	12204PLZD00	6.0	11.05	42.0	F	G1
8186.105	IN-EX	ASTRA J Sports Tourer, 2.0 CDTI	A 20 DTH	641463	5.0	10.03	46.7	A	S06
8186.105	IN-EX	ASTRA J Sports Tourer, 2.0 CDTI	A 20 DTH	641463	5.0	10.03	46.7	A	S06
8186.105	IN-EX	ASTRA J Sports Tourer, 2.0 CDTI	A 20 DTH	642699	5.0	10.03	46.7	A	S06
8186.105	IN-EX	ASTRA J Sports Tourer, 2.0 CDTI	A 20 DTH	642699	5.0	10.03	46.7	A	S06
8186.105	IN-EX	ASTRA J Sports Tourer, 2.0 CDTI	A 20 DTH	642700	5.0	10.03	46.7	A	S06
8186.105	IN-EX	ASTRA J Sports Tourer, 2.0 CDTI	A 20 DTH	642700	5.0	10.03	46.7	A	S06
8186.105	IN-EX	ASTRA J Sports Tourer, 2.0 CDTI	A 20 DTH	642701	5.0	10.03	46.7	A	S06

(D1) Internal diameter, (D2) External diameter, (B) Shape, (C) Material

VALVE GUIDES

OPEL

IVT Ref.	Type	Model	Engine	OEM Ref.	D1	D2	Length	B	C
8186.105	IN-EX	ASTRA J Sports Tourer, 2.0 CDTI	A 20 DTH	642701	5.0	10.03	46.7	A	S06
8133.600	IN-EX	ASTRA J Stufenheck, 1.7 CDTI	A 17 DTJ/A 17 DTC/A 17 DT	12204PLZD00	6.0	11.05	42.0	F	G1
8133.600	IN-EX	ASTRA J, 1.7 CDTI	A 17 DTJ/A 17 DTC/A 17 DT	12204PLZD00	6.0	11.05	42.0	F	G1
8133.600	IN-EX	ASTRA J, 1.7 CDTI	A 17 DTR	12204PLZD00	6.0	11.05	42.0	F	G1
8186.105	IN-EX	ASTRA J, 2.0 CDTI	A 20 DTH	641463	5.0	10.03	46.7	A	S06
8186.105	IN-EX	ASTRA J, 2.0 CDTI	A 20 DTH	641463	5.0	10.03	46.7	A	S06
8186.105	IN-EX	ASTRA J, 2.0 CDTI	A 20 DTH	642699	5.0	10.03	46.7	A	S06
8186.105	IN-EX	ASTRA J, 2.0 CDTI	A 20 DTH	642699	5.0	10.03	46.7	A	S06
8186.105	IN-EX	ASTRA J, 2.0 CDTI	A 20 DTH	642700	5.0	10.03	46.7	A	S06
8186.105	IN-EX	ASTRA J, 2.0 CDTI	A 20 DTH	642700	5.0	10.03	46.7	A	S06
8186.105	IN-EX	ASTRA J, 2.0 CDTI	A 20 DTH	642701	5.0	10.03	46.7	A	S06
8186.105	IN-EX	ASTRA J, 2.0 CDTI	A 20 DTH	642701	5.0	10.03	46.7	A	S06
8039.105	IN-EX	CALIBRA A (85_), 2.0 i	C 20 NE		7.0	11.03	45.8	A1	S06
8020.100	IN-EX	CALIBRA A (85_), 2.0 i	C 20 NE		7.0	11.03	45.8	A1	G
8027.600	IN-EX	CALIBRA A (85_), 2.0 i 16V	X 20 XEV		6.0	10.03	45.0	F	G1
8029.600	IN-EX	CALIBRA A (85_), 2.0 i 16V	X 20 XEV		6.0	11.07	40.5	F	B
8029.600	IN-EX	CALIBRA A (85_), 2.0 i 16V 4x4	X 20 XEV		6.0	11.07	40.5	F	B
8027.600	IN-EX	CALIBRA A (85_), 2.0 i 16V 4x4	X 20 XEV		6.0	10.03	45.0	F	G1
8020.100	IN-EX	CALIBRA A (85_), 2.0 i 4x4	C 20 NE		7.0	11.03	45.8	A1	G
8039.105	IN-EX	CALIBRA A (85_), 2.0 i 4x4	C 20 NE		7.0	11.03	45.8	A1	S06
8027.600	IN-EX	CALIBRA A (85_), 2.5 i V6	X 25 XE/C 25 XE		6.0	10.03	45.0	F	G1
8186.105	IN-EX	CASCADA (W13), 2.0 CDTI	A 20 DTH	641463	5.0	10.03	46.7	A	S06
8186.105	IN-EX	CASCADA (W13), 2.0 CDTI	A 20 DTH	642699	5.0	10.03	46.7	A	S06
8186.105	IN-EX	CASCADA (W13), 2.0 CDTI	A 20 DTH	642700	5.0	10.03	46.7	A	S06
8186.105	IN-EX	CASCADA (W13), 2.0 CDTI	A 20 DTH	642701	5.0	10.03	46.7	A	S06
8186.105	IN-EX	CASCADA (W13), 2.0 CDTI	A 20 DTR	641463	5.0	10.03	46.7	A	S06
8186.105	IN-EX	CASCADA (W13), 2.0 CDTI	A 20 DTR	642699	5.0	10.03	46.7	A	S06
8186.105	IN-EX	CASCADA (W13), 2.0 CDTI	A 20 DTR	642700	5.0	10.03	46.7	A	S06
8186.105	IN-EX	CASCADA (W13), 2.0 CDTI	A 20 DTR	642701	5.0	10.03	46.7	A	S06
8039.105	IN-EX	COMBO (71_), 1.2	C 12 NZ/X 12 SZ		7.0	11.03	45.8	A1	S06
8020.100	IN-EX	COMBO (71_), 1.2	C 12 NZ/X 12 SZ		7.0	11.03	45.8	A1	G
8039.105	IN-EX	COMBO (71_), 1.4	C 14 NZ/X 14 SZ		7.0	11.03	45.8	A1	S06
8020.100	IN-EX	COMBO (71_), 1.4	C 14 NZ/X 14 SZ		7.0	11.03	45.8	A1	G
8039.105	IN-EX	COMBO (71_), 1.4	C 14 SE		7.0	11.03	45.8	A1	S06
8020.100	IN-EX	COMBO (71_), 1.4	C 14 SE		7.0	11.03	45.8	A1	G
8176.100	IN-EX	COMBO (71_), 1.7 D	17 D (4EE1)/X 17 D (4EE1)	0642008	8.0	12.05	50.0	A-1	G
8040.605	IN-EX	COMBO Kasten/Kombi, 1.4 16V	Z 14 XEP	9158589	5.0	10.03	39.0	F	S06
8133.600	IN-EX	COMBO Kasten/Kombi, 1.7 DI 16	Y 17 DTL	12204PLZD00	6.0	11.05	42.0	F	G1
8133.600	IN-EX	COMBO Kasten/Kombi, 1.7 DTI 1	Y 17 DT	12204PLZD00	6.0	11.05	42.0	F	G1
8040.605	IN-EX	COMBO Tour, 1.4	Z 14 XEP	9158589	5.0	10.03	39.0	F	S06
8133.600	IN-EX	COMBO Tour, 1.7 DI 16V	Y 17 DTL	12204PLZD00	6.0	11.05	42.0	F	G1
8133.600	IN-EX	COMBO Tour, 1.7 DTI 16V	Y 17 DT	12204PLZD00	6.0	11.05	42.0	F	G1
8020.100	IN-EX	CORSA A CC (93_, 94_, 98_, 99_	10 S		7.0	11.03	45.8	A1	G
8039.105	IN-EX	CORSA A CC (93_, 94_, 98_, 99_	10 S		7.0	11.03	45.8	A1	S06
8039.105	IN-EX	CORSA A CC (93_, 94_, 98_, 99_	12 S		7.0	11.03	45.8	A1	S06
8020.100	IN-EX	CORSA A CC (93_, 94_, 98_, 99_	12 S		7.0	11.03	45.8	A1	G
8020.100	IN-EX	CORSA A CC (93_, 94_, 98_, 99_	E 12 GV/12 NC		7.0	11.03	45.8	A1	G
8039.105	IN-EX	CORSA A CC (93_, 94_, 98_, 99_	E 12 GV/12 NC		7.0	11.03	45.8	A1	S06
8039.105	IN-EX	CORSA A CC (93_, 94_, 98_, 99_	C 12 NZ		7.0	11.03	45.8	A1	S06
8020.100	IN-EX	CORSA A CC (93_, 94_, 98_, 99_	C 12 NZ		7.0	11.03	45.8	A1	G
8020.100	IN-EX	CORSA A CC (93_, 94_, 98_, 99_	12 NV		7.0	11.03	45.8	A1	G
8039.105	IN-EX	CORSA A CC (93_, 94_, 98_, 99_	12 NV		7.0	11.03	45.8	A1	S06
8039.105	IN-EX	CORSA A CC (93_, 94_, 98_, 99_	12 ST		7.0	11.03	45.8	A1	S06
8020.100	IN-EX	CORSA A CC (93_, 94_, 98_, 99_	12 ST		7.0	11.03	45.8	A1	G
8020.100	IN-EX	CORSA A CC (93_, 94_, 98_, 99_	13 NB		7.0	11.03	45.8	A1	G
8039.105	IN-EX	CORSA A CC (93_, 94_, 98_, 99_	13 NB		7.0	11.03	45.8	A1	S06
8039.105	IN-EX	CORSA A CC (93_, 94_, 98_, 99_	C 13 N		7.0	11.03	45.8	A1	S06
8020.100	IN-EX	CORSA A CC (93_, 94_, 98_, 99_	C 13 N		7.0	11.03	45.8	A1	G
8039.105	IN-EX	CORSA A CC (93_, 94_, 98_, 99_	13 SB		7.0	11.03	45.8	A1	S06
8020.100	IN-EX	CORSA A CC (93_, 94_, 98_, 99_	13 SB		7.0	11.03	45.8	A1	G
8020.100	IN-EX	CORSA A CC (93_, 94_, 98_, 99_	C 14 NZ		7.0	11.03	45.8	A1	G
8039.105	IN-EX	CORSA A CC (93_, 94_, 98_, 99_	C 14 NZ		7.0	11.03	45.8	A1	S06

(D1) Internal diameter, (D2) External diameter, (B) Shape, (C) Material

VALVE GUIDES

OPEL

IVT Ref.	Type	Model	Engine	OEM Ref.	D1	D2	Length	B	C
8039.105	IN-EX	CORSA A CC (93_, 94_, 98_, 99_	14 NV		7.0	11.03	45.8	A1	S06
8020.100	IN-EX	CORSA A CC (93_, 94_, 98_, 99_	14 NV		7.0	11.03	45.8	A1	G
8020.100	IN-EX	CORSA A CC (93_, 94_, 98_, 99_	C 14 SE		7.0	11.03	45.8	A1	G
8020.100	IN-EX	CORSA A CC (93_, 94_, 98_, 99_	C 16 NZ		7.0	11.03	45.8	A1	G
8039.105	IN-EX	CORSA A CC (93_, 94_, 98_, 99_	C 16 NZ		7.0	11.03	45.8	A1	S06
8020.100	IN-EX	CORSA A CC (93_, 94_, 98_, 99_	C 16 SEI		7.0	11.03	45.8	A1	G
8039.105	IN-EX	CORSA A CC (93_, 94_, 98_, 99_	C 16 SEI		7.0	11.03	45.8	A1	S06
8020.100	IN-EX	CORSA A CC (93_, 94_, 98_, 99_	E 16 SE		7.0	11.03	45.8	A1	G
8039.105	IN-EX	CORSA A CC (93_, 94_, 98_, 99_	E 16 SE		7.0	11.03	45.8	A1	S06
8020.100	IN-EX	CORSA A CC (93_, 94_, 98_, 99_	C 16 SE		7.0	11.03	45.8	A1	G
8039.105	IN-EX	CORSA A CC (93_, 94_, 98_, 99_	C 16 SE		7.0	11.03	45.8	A1	S06
8020.100	IN-EX	CORSA A Kasten, 1.0	10 S		7.0	11.03	45.8	A1	G
8039.105	IN-EX	CORSA A Kasten, 1.0	10 S		7.0	11.03	45.8	A1	S06
8020.100	IN-EX	CORSA A Kasten, 1.2	12 S		7.0	11.03	45.8	A1	G
8039.105	IN-EX	CORSA A Kasten, 1.2	12 S		7.0	11.03	45.8	A1	S06
8039.105	IN-EX	CORSA A Kasten, 1.2	12 ST		7.0	11.03	45.8	A1	S06
8020.100	IN-EX	CORSA A Kasten, 1.2	12 ST		7.0	11.03	45.8	A1	G
8039.105	IN-EX	CORSA A Kasten, 1.2	E 12 GV/12 NC		7.0	11.03	45.8	A1	S06
8020.100	IN-EX	CORSA A Kasten, 1.2	E 12 GV/12 NC		7.0	11.03	45.8	A1	G
8039.105	IN-EX	CORSA A Kasten, 1.3	13 NB		7.0	11.03	45.8	A1	S06
8020.100	IN-EX	CORSA A Kasten, 1.3	13 NB		7.0	11.03	45.8	A1	G
8020.100	IN-EX	CORSA A Kasten, 1.3	13 SB		7.0	11.03	45.8	A1	G
8039.105	IN-EX	CORSA A Kasten, 1.3	13 SB		7.0	11.03	45.8	A1	S06
8039.105	IN-EX	CORSA A TR (91_, 92_, 96_, 97_)	10 S		7.0	11.03	45.8	A1	S06
8020.100	IN-EX	CORSA A TR (91_, 92_, 96_, 97_)	10 S		7.0	11.03	45.8	A1	G
8039.105	IN-EX	CORSA A TR (91_, 92_, 96_, 97_)	C 12 NZ		7.0	11.03	45.8	A1	S06
8020.100	IN-EX	CORSA A TR (91_, 92_, 96_, 97_)	C 12 NZ		7.0	11.03	45.8	A1	G
8020.100	IN-EX	CORSA A TR (91_, 92_, 96_, 97_)	E 12 GV/12 NC		7.0	11.03	45.8	A1	G
8039.105	IN-EX	CORSA A TR (91_, 92_, 96_, 97_)	E 12 GV/12 NC		7.0	11.03	45.8	A1	S06
8039.105	IN-EX	CORSA A TR (91_, 92_, 96_, 97_)	12 S		7.0	11.03	45.8	A1	S06
8020.100	IN-EX	CORSA A TR (91_, 92_, 96_, 97_)	12 S		7.0	11.03	45.8	A1	G
8020.100	IN-EX	CORSA A TR (91_, 92_, 96_, 97_)	12 ST		7.0	11.03	45.8	A1	G
8039.105	IN-EX	CORSA A TR (91_, 92_, 96_, 97_)	12 ST		7.0	11.03	45.8	A1	S06
8020.100	IN-EX	CORSA A TR (91_, 92_, 96_, 97_)	13 NB/C 13 N		7.0	11.03	45.8	A1	G
8039.105	IN-EX	CORSA A TR (91_, 92_, 96_, 97_)	13 NB/C 13 N		7.0	11.03	45.8	A1	S06
8039.105	IN-EX	CORSA A TR (91_, 92_, 96_, 97_)	13 SB		7.0	11.03	45.8	A1	S06
8020.100	IN-EX	CORSA A TR (91_, 92_, 96_, 97_)	13 SB		7.0	11.03	45.8	A1	G
8039.105	IN-EX	CORSA A TR (91_, 92_, 96_, 97_)	C 14 NZ		7.0	11.03	45.8	A1	S06
8020.100	IN-EX	CORSA A TR (91_, 92_, 96_, 97_)	C 14 NZ		7.0	11.03	45.8	A1	G
8039.105	IN-EX	CORSA A TR (91_, 92_, 96_, 97_)	14 NV		7.0	11.03	45.8	A1	S06
8020.100	IN-EX	CORSA A TR (91_, 92_, 96_, 97_)	14 NV		7.0	11.03	45.8	A1	G
8040.605	IN-EX	CORSA B (73_, 78_, 79_), 1.0 i 12	X 10 XE	9158589	5.0	10.03	39.0	F	S06
8020.100	IN-EX	CORSA B (73_, 78_, 79_), 1.2 i	12 NZ		7.0	11.03	45.8	A1	G
8039.105	IN-EX	CORSA B (73_, 78_, 79_), 1.2 i	12 NZ		7.0	11.03	45.8	A1	S06
8039.105	IN-EX	CORSA B (73_, 78_, 79_), 1.2 i	C 12 NZ/X 12 SZ		7.0	11.03	45.8	A1	S06
8020.100	IN-EX	CORSA B (73_, 78_, 79_), 1.2 i	C 12 NZ/X 12 SZ		7.0	11.03	45.8	A1	G
8040.605	IN-EX	CORSA B (73_, 78_, 79_), 1.2 i 16	X 12 XE	9158589	5.0	10.03	39.0	F	S06
8020.100	IN-EX	CORSA B (73_, 78_, 79_), 1.4 i	C 14 NZ/X 14 SZ		7.0	11.03	45.8	A1	G
8039.105	IN-EX	CORSA B (73_, 78_, 79_), 1.4 i	C 14 NZ/X 14 SZ		7.0	11.03	45.8	A1	S06
8027.600	IN-EX	CORSA B (73_, 78_, 79_), 1.4 i 16	X 14 XE		6.0	10.03	45.0	F	G1
8027.600	IN-EX	CORSA B (73_, 78_, 79_), 1.4 i 16	X 14 XE		6.0	10.03	45.0	F	G1
8039.105	IN-EX	CORSA B (73_, 78_, 79_), 1.4 Si	C 14 SE		7.0	11.03	45.8	A1	S06
8020.100	IN-EX	CORSA B (73_, 78_, 79_), 1.4 Si	C 14 SE		7.0	11.03	45.8	A1	G
8027.600	IN-EX	CORSA B (73_, 78_, 79_), 1.6 GS	C 16 XE		6.0	10.03	45.0	F	G1
8027.600	IN-EX	CORSA B (73_, 78_, 79_), 1.6 i 16	X 16 XE		6.0	10.03	45.0	F	G1
8020.100	IN-EX	CORSA B Kasten (73_), 1.4 i	C 14 NZ/X 14 SZ		7.0	11.03	45.8	A1	G
8039.105	IN-EX	CORSA B Kasten (73_), 1.4 i	C 14 NZ/X 14 SZ		7.0	11.03	45.8	A1	S06
8040.605	IN-EX	CORSA C (F08, F68), 1.0	Z 10 XE	9158589	5.0	10.03	39.0	F	S06
8040.605	IN-EX	CORSA C (F08, F68), 1.0	Z 10 XEP	9158589	5.0	10.03	39.0	F	S06
8040.605	IN-EX	CORSA C (F08, F68), 1.2	Z 12 XE	9158589	5.0	10.03	39.0	F	S06
8040.605	IN-EX	CORSA C (F08, F68), 1.2 Twinpor	Z 12 XEP	9158589	5.0	10.03	39.0	F	S06
8027.600	IN-EX	CORSA C (F08, F68), 1.4	Z 14 XE		6.0	10.03	45.0	F	G1

(D1) Internal diameter, (D2) External diameter, (B) Shape, (C) Material

VALVE GUIDES

OPEL

IVT Ref.	Type	Model	Engine	OEM Ref.	D1	D2	Length	B	C
8040.605	IN-EX	CORSA C (F08, F68), 1.4	Z 14 XE	9158589	5.0	10.03	39.0	F	S06
8040.605	IN-EX	CORSA C (F08, F68), 1.4 Twinpor	Z 14 XEP	9158589	5.0	10.03	39.0	F	S06
8133.600	IN-EX	CORSA C (F08, F68), 1.7 CDTI	Z 17 DTH	12204PLZD00	6.0	11.05	42.0	F	G1
8133.600	IN-EX	CORSA C (F08, F68), 1.7 DTI	Y 17 DT	12204PLZD00	6.0	11.05	42.0	F	G1
8040.605	IN-EX	CORSA C (F08, F68), 1.8	Z 18 XE	9158589	5.0	10.03	39.0	F	S06
8040.605	IN-EX	CORSA C Kasten (F08, W5L), 1.2	Z 12 XEP	9158589	5.0	10.03	39.0	F	S06
8040.605	IN-EX	CORSA C Kasten (F08, W5L), 1.2	Z 12 XE	9158589	5.0	10.03	39.0	F	S06
8027.600	IN-EX	CORSA C Kasten (F08, W5L), 1.4	Z 14 XEP		6.0	10.03	45.0	F	G1
8040.605	IN-EX	CORSA C Kasten (F08, W5L), 1.4	Z 14 XEP	9158589	5.0	10.03	39.0	F	S06
8133.600	IN-EX	CORSA C Kasten (F08, W5L), 1.7	Y 17 DTL	12204PLZD00	6.0	11.05	42.0	F	G1
8133.600	IN-EX	CORSA C Kasten (F08, W5L), 1.7	Y 17 DT	12204PLZD00	6.0	11.05	42.0	F	G1
8040.605	IN-EX	CORSA D, 1.0	A 10 XEP	9158589	5.0	10.03	39.0	F	S06
8040.605	IN-EX	CORSA D, 1.0	Z 10 XEP	9158589	5.0	10.03	39.0	F	S06
8040.605	IN-EX	CORSA D, 1.2	Z 12 XEP	9158589	5.0	10.03	39.0	F	S06
8040.605	IN-EX	CORSA D, 1.2 LPG	Z 12 XEP	9158589	5.0	10.03	39.0	F	S06
8040.605	IN-EX	CORSA D, 1.4	Z 14 XEP	9158589	5.0	10.03	39.0	F	S06
8040.605	IN-EX	CORSA D, 1.4 LPG	Z 14 XEP	9158589	5.0	10.03	39.0	F	S06
8133.600	IN-EX	CORSA D, 1.7 CDTI	A 17 DTS	12204PLZD00	6.0	11.05	42.0	F	G1
8133.600	IN-EX	CORSA D, 1.7 CDTI	Z 17 DTR	12204PLZD00	6.0	11.05	42.0	F	G1
8027.600	IN-EX	FRONTERA A (5_MWL4), 2.2 i (5	X 22 XE		6.0	10.03	45.0	F	G1
8020.100	IN-EX	FRONTERA A Sport (5_SUD2), 2.	C 20 NE/X 20 SE		7.0	11.03	45.8	A1	G
8039.105	IN-EX	FRONTERA A Sport (5_SUD2), 2.	C 20 NE/X 20 SE		7.0	11.03	45.8	A1	S06
8137.605	IN-EX	FRONTERA B (6B_), 2.2 DTI	Y 22 DTH	4500633	6.0	10.03	45.0	F	S06
8137.605	IN-EX	FRONTERA B (6B_), 2.2 DTI	Y 22 DTH	4770269	6.0	10.03	45.0	F	S06
8137.605	IN-EX	FRONTERA B (6B_), 2.2 DTI	Y 22 DTH	642063	6.0	10.03	45.0	F	S06
8137.605	IN-EX	FRONTERA B (6B_), 2.2 DTI	Y 22 DTH	9106309	6.0	10.03	45.0	F	S06
8137.605	IN-EX	FRONTERA B (6B_), 2.2 DTI (6B	X 22 DTH/Y 22 DTH	4500633	6.0	10.03	45.0	F	S06
8137.605	IN-EX	FRONTERA B (6B_), 2.2 DTI (6B	X 22 DTH/Y 22 DTH	4770269	6.0	10.03	45.0	F	S06
8137.605	IN-EX	FRONTERA B (6B_), 2.2 DTI (6B	X 22 DTH/Y 22 DTH	642063	6.0	10.03	45.0	F	S06
8137.605	IN-EX	FRONTERA B (6B_), 2.2 DTI (6B	X 22 DTH/Y 22 DTH	9106309	6.0	10.03	45.0	F	S06
8027.600	IN-EX	FRONTERA B (6B_), 2.2 i (6B_ZC	X 22 SE/Y 22 SE		6.0	10.03	45.0	F	G1
8039.105	IN-EX	GT, 1.1	11 SR		7.0	11.03	45.8	A1	S06
8020.100	IN-EX	GT, 1.1	11 SR		7.0	11.03	45.8	A1	G
8186.105	IN-EX	INSIGNIA Caravan, 2.0 Biturbo C	A 20 DTR	641463	5.0	10.03	46.7	A	S06
8186.105	IN-EX	INSIGNIA Caravan, 2.0 Biturbo C	A 20 DTR	641463	5.0	10.03	46.7	A	S06
8186.105	IN-EX	INSIGNIA Caravan, 2.0 Biturbo C	A 20 DTR	642699	5.0	10.03	46.7	A	S06
8186.105	IN-EX	INSIGNIA Caravan, 2.0 Biturbo C	A 20 DTR	642699	5.0	10.03	46.7	A	S06
8186.105	IN-EX	INSIGNIA Caravan, 2.0 Biturbo C	A 20 DTR	642700	5.0	10.03	46.7	A	S06
8186.105	IN-EX	INSIGNIA Caravan, 2.0 Biturbo C	A 20 DTR	642700	5.0	10.03	46.7	A	S06
8186.105	IN-EX	INSIGNIA Caravan, 2.0 Biturbo C	A 20 DTR	642701	5.0	10.03	46.7	A	S06
8186.105	IN-EX	INSIGNIA Caravan, 2.0 Biturbo C	A 20 DTR	642701	5.0	10.03	46.7	A	S06
8186.105	IN-EX	INSIGNIA Caravan, 2.0 Biturbo C	A 20 DTR	641463	5.0	10.03	46.7	A	S06
8186.105	IN-EX	INSIGNIA Caravan, 2.0 Biturbo C	A 20 DTR	641463	5.0	10.03	46.7	A	S06
8186.105	IN-EX	INSIGNIA Caravan, 2.0 Biturbo C	A 20 DTR	642699	5.0	10.03	46.7	A	S06
8186.105	IN-EX	INSIGNIA Caravan, 2.0 Biturbo C	A 20 DTR	642699	5.0	10.03	46.7	A	S06
8186.105	IN-EX	INSIGNIA Caravan, 2.0 Biturbo C	A 20 DTR	642700	5.0	10.03	46.7	A	S06
8186.105	IN-EX	INSIGNIA Caravan, 2.0 Biturbo C	A 20 DTR	642700	5.0	10.03	46.7	A	S06
8186.105	IN-EX	INSIGNIA Caravan, 2.0 Biturbo C	A 20 DTR	642701	5.0	10.03	46.7	A	S06
8186.105	IN-EX	INSIGNIA Caravan, 2.0 Biturbo C	A 20 DTR	642701	5.0	10.03	46.7	A	S06
8186.105	IN-EX	INSIGNIA Caravan, 2.0 CDTI	A 20 DTE	641463	5.0	10.03	46.7	A	S06
8186.105	IN-EX	INSIGNIA Caravan, 2.0 CDTI	A 20 DTE	641463	5.0	10.03	46.7	A	S06
8186.105	IN-EX	INSIGNIA Caravan, 2.0 CDTI	A 20 DTE	642699	5.0	10.03	46.7	A	S06
8186.105	IN-EX	INSIGNIA Caravan, 2.0 CDTI	A 20 DTE	642699	5.0	10.03	46.7	A	S06
8186.105	IN-EX	INSIGNIA Caravan, 2.0 CDTI	A 20 DTE	642700	5.0	10.03	46.7	A	S06
8186.105	IN-EX	INSIGNIA Caravan, 2.0 CDTI	A 20 DTE	642700	5.0	10.03	46.7	A	S06
8186.105	IN-EX	INSIGNIA Caravan, 2.0 CDTI	A 20 DTE	642701	5.0	10.03	46.7	A	S06
8186.105	IN-EX	INSIGNIA Caravan, 2.0 CDTI	A 20 DTE	642701	5.0	10.03	46.7	A	S06
8186.105	IN-EX	INSIGNIA Caravan, 2.0 CDTI	A 20 DTH	641463	5.0	10.03	46.7	A	S06
8186.105	IN-EX	INSIGNIA Caravan, 2.0 CDTI	A 20 DTH	641463	5.0	10.03	46.7	A	S06
8186.105	IN-EX	INSIGNIA Caravan, 2.0 CDTI	A 20 DTH	642699	5.0	10.03	46.7	A	S06
8186.105	IN-EX	INSIGNIA Caravan, 2.0 CDTI	A 20 DTH	642699	5.0	10.03	46.7	A	S06
8186.105	IN-EX	INSIGNIA Caravan, 2.0 CDTI	A 20 DTH	642700	5.0	10.03	46.7	A	S06

(D1) Internal diameter, (D2) External diameter, (B) Shape, (C) Material

VALVE GUIDES

IVT Ref.	Type	Model	Engine	OEM Ref.	D1	D2	Length	B	C
OPEL									
8186.105	IN-EX	INSIGNIA Caravan, 2.0 CDTI	A 20 DTH	642700	5.0	10.03	46.7	A	S06
8186.105	IN-EX	INSIGNIA Caravan, 2.0 CDTI	A 20 DTH	642701	5.0	10.03	46.7	A	S06
8186.105	IN-EX	INSIGNIA Caravan, 2.0 CDTI	A 20 DTH	642701	5.0	10.03	46.7	A	S06
8186.105	IN-EX	INSIGNIA Caravan, 2.0 CDTI	A 20 DTJ/A 20 DT	641463	5.0	10.03	46.7	A	S06
8186.105	IN-EX	INSIGNIA Caravan, 2.0 CDTI	A 20 DTJ/A 20 DT	642699	5.0	10.03	46.7	A	S06
8186.105	IN-EX	INSIGNIA Caravan, 2.0 CDTI	A 20 DTJ/A 20 DT	642700	5.0	10.03	46.7	A	S06
8186.105	IN-EX	INSIGNIA Caravan, 2.0 CDTI	A 20 DTJ/A 20 DT	642701	5.0	10.03	46.7	A	S06
8186.105	IN-EX	INSIGNIA Caravan, 2.0 CDTI	A 20 DTL/A 20 DTC	641463	5.0	10.03	46.7	A	S06
8186.105	IN-EX	INSIGNIA Caravan, 2.0 CDTI	A 20 DTL/A 20 DTC	642699	5.0	10.03	46.7	A	S06
8186.105	IN-EX	INSIGNIA Caravan, 2.0 CDTI	A 20 DTL/A 20 DTC	642700	5.0	10.03	46.7	A	S06
8186.105	IN-EX	INSIGNIA Caravan, 2.0 CDTI	A 20 DTL/A 20 DTC	642701	5.0	10.03	46.7	A	S06
8186.105	IN-EX	INSIGNIA Caravan, 2.0 CDTI 4x4	A 20 DTH	641463	5.0	10.03	46.7	A	S06
8186.105	IN-EX	INSIGNIA Caravan, 2.0 CDTI 4x4	A 20 DTH	641463	5.0	10.03	46.7	A	S06
8186.105	IN-EX	INSIGNIA Caravan, 2.0 CDTI 4x4	A 20 DTH	642699	5.0	10.03	46.7	A	S06
8186.105	IN-EX	INSIGNIA Caravan, 2.0 CDTI 4x4	A 20 DTH	642699	5.0	10.03	46.7	A	S06
8186.105	IN-EX	INSIGNIA Caravan, 2.0 CDTI 4x4	A 20 DTH	642700	5.0	10.03	46.7	A	S06
8186.105	IN-EX	INSIGNIA Caravan, 2.0 CDTI 4x4	A 20 DTH	642700	5.0	10.03	46.7	A	S06
8186.105	IN-EX	INSIGNIA Caravan, 2.0 CDTI 4x4	A 20 DTH	642701	5.0	10.03	46.7	A	S06
8186.105	IN-EX	INSIGNIA Caravan, 2.0 CDTI 4x4	A 20 DTH	642701	5.0	10.03	46.7	A	S06
8186.105	IN-EX	INSIGNIA Caravan, 2.0 E85 Turbo	A 20 NHT	641463	5.0	10.03	46.7	A	S06
8186.105	IN-EX	INSIGNIA Caravan, 2.0 E85 Turbo	A 20 NHT	642699	5.0	10.03	46.7	A	S06
8186.105	IN-EX	INSIGNIA Caravan, 2.0 E85 Turbo	A 20 NHT	642700	5.0	10.03	46.7	A	S06
8186.105	IN-EX	INSIGNIA Caravan, 2.0 E85 Turbo	A 20 NHT	642701	5.0	10.03	46.7	A	S06
8186.105	IN-EX	INSIGNIA Caravan, 2.0 Turbo	A 20 NHT	641463	5.0	10.03	46.7	A	S06
8186.105	IN-EX	INSIGNIA Caravan, 2.0 Turbo	A 20 NHT	642699	5.0	10.03	46.7	A	S06
8186.105	IN-EX	INSIGNIA Caravan, 2.0 Turbo	A 20 NHT	642700	5.0	10.03	46.7	A	S06
8186.105	IN-EX	INSIGNIA Caravan, 2.0 Turbo	A 20 NHT	642701	5.0	10.03	46.7	A	S06
8186.105	IN-EX	INSIGNIA Caravan, 2.0 Turbo 4x4	A 20 NFT	641463	5.0	10.03	46.7	A	S06
8186.105	IN-EX	INSIGNIA Caravan, 2.0 Turbo 4x4	A 20 NFT	642699	5.0	10.03	46.7	A	S06
8186.105	IN-EX	INSIGNIA Caravan, 2.0 Turbo 4x4	A 20 NFT	642700	5.0	10.03	46.7	A	S06
8186.105	IN-EX	INSIGNIA Caravan, 2.0 Turbo 4x4	A 20 NFT	642701	5.0	10.03	46.7	A	S06
8186.105	IN-EX	INSIGNIA Caravan, 2.0 Turbo 4x4	A 20 NHT	641463	5.0	10.03	46.7	A	S06
8186.105	IN-EX	INSIGNIA Caravan, 2.0 Turbo 4x4	A 20 NHT	642699	5.0	10.03	46.7	A	S06
8186.105	IN-EX	INSIGNIA Caravan, 2.0 Turbo 4x4	A 20 NHT	642700	5.0	10.03	46.7	A	S06
8186.105	IN-EX	INSIGNIA Caravan, 2.0 Turbo 4x4	A 20 NHT	642701	5.0	10.03	46.7	A	S06
8186.105	IN-EX	INSIGNIA Stufenheck, 2.0 Biturbo	A 20 DTR	641463	5.0	10.03	46.7	A	S06
8186.105	IN-EX	INSIGNIA Stufenheck, 2.0 Biturbo	A 20 DTR	641463	5.0	10.03	46.7	A	S06
8186.105	IN-EX	INSIGNIA Stufenheck, 2.0 Biturbo	A 20 DTR	642699	5.0	10.03	46.7	A	S06
8186.105	IN-EX	INSIGNIA Stufenheck, 2.0 Biturbo	A 20 DTR	642699	5.0	10.03	46.7	A	S06
8186.105	IN-EX	INSIGNIA Stufenheck, 2.0 Biturbo	A 20 DTR	642700	5.0	10.03	46.7	A	S06
8186.105	IN-EX	INSIGNIA Stufenheck, 2.0 Biturbo	A 20 DTR	642700	5.0	10.03	46.7	A	S06
8186.105	IN-EX	INSIGNIA Stufenheck, 2.0 Biturbo	A 20 DTR	642701	5.0	10.03	46.7	A	S06
8186.105	IN-EX	INSIGNIA Stufenheck, 2.0 Biturbo	A 20 DTR	642701	5.0	10.03	46.7	A	S06
8186.105	IN-EX	INSIGNIA Stufenheck, 2.0 Biturbo	A 20 DTR	641463	5.0	10.03	46.7	A	S06
8186.105	IN-EX	INSIGNIA Stufenheck, 2.0 Biturbo	A 20 DTR	641463	5.0	10.03	46.7	A	S06
8186.105	IN-EX	INSIGNIA Stufenheck, 2.0 Biturbo	A 20 DTR	642699	5.0	10.03	46.7	A	S06
8186.105	IN-EX	INSIGNIA Stufenheck, 2.0 Biturbo	A 20 DTR	642699	5.0	10.03	46.7	A	S06
8186.105	IN-EX	INSIGNIA Stufenheck, 2.0 Biturbo	A 20 DTR	642700	5.0	10.03	46.7	A	S06
8186.105	IN-EX	INSIGNIA Stufenheck, 2.0 Biturbo	A 20 DTR	642700	5.0	10.03	46.7	A	S06
8186.105	IN-EX	INSIGNIA Stufenheck, 2.0 Biturbo	A 20 DTR	642701	5.0	10.03	46.7	A	S06
8186.105	IN-EX	INSIGNIA Stufenheck, 2.0 Biturbo	A 20 DTR	642701	5.0	10.03	46.7	A	S06
8186.105	IN-EX	INSIGNIA Stufenheck, 2.0 CDTI	A 20 DTE	641463	5.0	10.03	46.7	A	S06
8186.105	IN-EX	INSIGNIA Stufenheck, 2.0 CDTI	A 20 DTE	641463	5.0	10.03	46.7	A	S06
8186.105	IN-EX	INSIGNIA Stufenheck, 2.0 CDTI	A 20 DTE	642699	5.0	10.03	46.7	A	S06
8186.105	IN-EX	INSIGNIA Stufenheck, 2.0 CDTI	A 20 DTE	642699	5.0	10.03	46.7	A	S06
8186.105	IN-EX	INSIGNIA Stufenheck, 2.0 CDTI	A 20 DTE	642700	5.0	10.03	46.7	A	S06
8186.105	IN-EX	INSIGNIA Stufenheck, 2.0 CDTI	A 20 DTE	642700	5.0	10.03	46.7	A	S06
8186.105	IN-EX	INSIGNIA Stufenheck, 2.0 CDTI	A 20 DTE	642701	5.0	10.03	46.7	A	S06
8186.105	IN-EX	INSIGNIA Stufenheck, 2.0 CDTI	A 20 DTE	642701	5.0	10.03	46.7	A	S06
8186.105	IN-EX	INSIGNIA Stufenheck, 2.0 CDTI	A 20 DTH	641463	5.0	10.03	46.7	A	S06
8186.105	IN-EX	INSIGNIA Stufenheck, 2.0 CDTI	A 20 DTH	641463	5.0	10.03	46.7	A	S06
8186.105	IN-EX	INSIGNIA Stufenheck, 2.0 CDTI	A 20 DTH	642699	5.0	10.03	46.7	A	S06

(D1) Internal diameter, (D2) External diameter, (B) Shape, (C) Material

VALVE GUIDES

IVT Ref.	Type	Model	Engine	OEM Ref.	D1	D2	Length	B	C
OPEL									
8186.105	IN-EX	INSIGNIA Stufenheck, 2.0 CDTI	A 20 DTH	642699	5.0	10.03	46.7	A	S06
8186.105	IN-EX	INSIGNIA Stufenheck, 2.0 CDTI	A 20 DTH	642700	5.0	10.03	46.7	A	S06
8186.105	IN-EX	INSIGNIA Stufenheck, 2.0 CDTI	A 20 DTH	642700	5.0	10.03	46.7	A	S06
8186.105	IN-EX	INSIGNIA Stufenheck, 2.0 CDTI	A 20 DTH	642701	5.0	10.03	46.7	A	S06
8186.105	IN-EX	INSIGNIA Stufenheck, 2.0 CDTI	A 20 DTH	642701	5.0	10.03	46.7	A	S06
8186.105	IN-EX	INSIGNIA Stufenheck, 2.0 CDTI	A 20 DTJ/A 20 DT	641463	5.0	10.03	46.7	A	S06
8186.105	IN-EX	INSIGNIA Stufenheck, 2.0 CDTI	A 20 DTJ/A 20 DT	642699	5.0	10.03	46.7	A	S06
8186.105	IN-EX	INSIGNIA Stufenheck, 2.0 CDTI	A 20 DTJ/A 20 DT	642700	5.0	10.03	46.7	A	S06
8186.105	IN-EX	INSIGNIA Stufenheck, 2.0 CDTI	A 20 DTJ/A 20 DT	642701	5.0	10.03	46.7	A	S06
8186.105	IN-EX	INSIGNIA Stufenheck, 2.0 CDTI	A 20 DTL/A 20 DTC	641463	5.0	10.03	46.7	A	S06
8186.105	IN-EX	INSIGNIA Stufenheck, 2.0 CDTI	A 20 DTL/A 20 DTC	642699	5.0	10.03	46.7	A	S06
8186.105	IN-EX	INSIGNIA Stufenheck, 2.0 CDTI	A 20 DTL/A 20 DTC	642700	5.0	10.03	46.7	A	S06
8186.105	IN-EX	INSIGNIA Stufenheck, 2.0 CDTI	A 20 DTL/A 20 DTC	642701	5.0	10.03	46.7	A	S06
8186.105	IN-EX	INSIGNIA Stufenheck, 2.0 CDTI 4	A 20 DTH	641463	5.0	10.03	46.7	A	S06
8186.105	IN-EX	INSIGNIA Stufenheck, 2.0 CDTI 4	A 20 DTH	641463	5.0	10.03	46.7	A	S06
8186.105	IN-EX	INSIGNIA Stufenheck, 2.0 CDTI 4	A 20 DTH	642699	5.0	10.03	46.7	A	S06
8186.105	IN-EX	INSIGNIA Stufenheck, 2.0 CDTI 4	A 20 DTH	642699	5.0	10.03	46.7	A	S06
8186.105	IN-EX	INSIGNIA Stufenheck, 2.0 CDTI 4	A 20 DTH	642700	5.0	10.03	46.7	A	S06
8186.105	IN-EX	INSIGNIA Stufenheck, 2.0 CDTI 4	A 20 DTH	642700	5.0	10.03	46.7	A	S06
8186.105	IN-EX	INSIGNIA Stufenheck, 2.0 CDTI 4	A 20 DTH	642701	5.0	10.03	46.7	A	S06
8186.105	IN-EX	INSIGNIA Stufenheck, 2.0 CDTI 4	A 20 DTH	642701	5.0	10.03	46.7	A	S06
8186.105	IN-EX	INSIGNIA Stufenheck, 2.0 Turbo	A 20 NHT	641463	5.0	10.03	46.7	A	S06
8186.105	IN-EX	INSIGNIA Stufenheck, 2.0 Turbo	A 20 NHT	642699	5.0	10.03	46.7	A	S06
8186.105	IN-EX	INSIGNIA Stufenheck, 2.0 Turbo	A 20 NHT	642700	5.0	10.03	46.7	A	S06
8186.105	IN-EX	INSIGNIA Stufenheck, 2.0 Turbo	A 20 NHT	642701	5.0	10.03	46.7	A	S06
8186.105	IN-EX	INSIGNIA Stufenheck, 2.0 Turbo	A 20 NFT	641463	5.0	10.03	46.7	A	S06
8186.105	IN-EX	INSIGNIA Stufenheck, 2.0 Turbo	A 20 NFT	642699	5.0	10.03	46.7	A	S06
8186.105	IN-EX	INSIGNIA Stufenheck, 2.0 Turbo	A 20 NFT	642700	5.0	10.03	46.7	A	S06
8186.105	IN-EX	INSIGNIA Stufenheck, 2.0 Turbo	A 20 NFT	642701	5.0	10.03	46.7	A	S06
8186.105	IN-EX	INSIGNIA Stufenheck, 2.0 Turbo	A 20 NHT	641463	5.0	10.03	46.7	A	S06
8186.105	IN-EX	INSIGNIA Stufenheck, 2.0 Turbo	A 20 NHT	642699	5.0	10.03	46.7	A	S06
8186.105	IN-EX	INSIGNIA Stufenheck, 2.0 Turbo	A 20 NHT	642700	5.0	10.03	46.7	A	S06
8186.105	IN-EX	INSIGNIA Stufenheck, 2.0 Turbo	A 20 NHT	642701	5.0	10.03	46.7	A	S06
8186.105	IN-EX	INSIGNIA Stufenheck, 2.0 Turbo	A 20 NHT	641463	5.0	10.03	46.7	A	S06
8186.105	IN-EX	INSIGNIA Stufenheck, 2.0 Turbo	A 20 NHT	642699	5.0	10.03	46.7	A	S06
8186.105	IN-EX	INSIGNIA Stufenheck, 2.0 Turbo	A 20 NHT	642700	5.0	10.03	46.7	A	S06
8186.105	IN-EX	INSIGNIA Stufenheck, 2.0 Turbo	A 20 NHT	642701	5.0	10.03	46.7	A	S06
8186.105	IN-EX	INSIGNIA, 2.0 Biturbo CDTI	A 20 DTR	641463	5.0	10.03	46.7	A	S06
8186.105	IN-EX	INSIGNIA, 2.0 Biturbo CDTI	A 20 DTR	641463	5.0	10.03	46.7	A	S06
8186.105	IN-EX	INSIGNIA, 2.0 Biturbo CDTI	A 20 DTR	642699	5.0	10.03	46.7	A	S06
8186.105	IN-EX	INSIGNIA, 2.0 Biturbo CDTI	A 20 DTR	642699	5.0	10.03	46.7	A	S06
8186.105	IN-EX	INSIGNIA, 2.0 Biturbo CDTI	A 20 DTR	642700	5.0	10.03	46.7	A	S06
8186.105	IN-EX	INSIGNIA, 2.0 Biturbo CDTI	A 20 DTR	642700	5.0	10.03	46.7	A	S06
8186.105	IN-EX	INSIGNIA, 2.0 Biturbo CDTI	A 20 DTR	642701	5.0	10.03	46.7	A	S06
8186.105	IN-EX	INSIGNIA, 2.0 Biturbo CDTI	A 20 DTR	642701	5.0	10.03	46.7	A	S06
8186.105	IN-EX	INSIGNIA, 2.0 Biturbo CDTI 4x4	A 20 DTR	641463	5.0	10.03	46.7	A	S06
8186.105	IN-EX	INSIGNIA, 2.0 Biturbo CDTI 4x4	A 20 DTR	641463	5.0	10.03	46.7	A	S06
8186.105	IN-EX	INSIGNIA, 2.0 Biturbo CDTI 4x4	A 20 DTR	642699	5.0	10.03	46.7	A	S06
8186.105	IN-EX	INSIGNIA, 2.0 Biturbo CDTI 4x4	A 20 DTR	642699	5.0	10.03	46.7	A	S06
8186.105	IN-EX	INSIGNIA, 2.0 Biturbo CDTI 4x4	A 20 DTR	642700	5.0	10.03	46.7	A	S06
8186.105	IN-EX	INSIGNIA, 2.0 Biturbo CDTI 4x4	A 20 DTR	642700	5.0	10.03	46.7	A	S06
8186.105	IN-EX	INSIGNIA, 2.0 Biturbo CDTI 4x4	A 20 DTR	642701	5.0	10.03	46.7	A	S06
8186.105	IN-EX	INSIGNIA, 2.0 Biturbo CDTI 4x4	A 20 DTR	642701	5.0	10.03	46.7	A	S06
8186.105	IN-EX	INSIGNIA, 2.0 CDTI	A 20 DTE	641463	5.0	10.03	46.7	A	S06
8186.105	IN-EX	INSIGNIA, 2.0 CDTI	A 20 DTE	641463	5.0	10.03	46.7	A	S06
8186.105	IN-EX	INSIGNIA, 2.0 CDTI	A 20 DTE	642699	5.0	10.03	46.7	A	S06
8186.105	IN-EX	INSIGNIA, 2.0 CDTI	A 20 DTE	642699	5.0	10.03	46.7	A	S06
8186.105	IN-EX	INSIGNIA, 2.0 CDTI	A 20 DTE	642700	5.0	10.03	46.7	A	S06
8186.105	IN-EX	INSIGNIA, 2.0 CDTI	A 20 DTE	642700	5.0	10.03	46.7	A	S06
8186.105	IN-EX	INSIGNIA, 2.0 CDTI	A 20 DTE	642701	5.0	10.03	46.7	A	S06
8186.105	IN-EX	INSIGNIA, 2.0 CDTI	A 20 DTE	642701	5.0	10.03	46.7	A	S06
8186.105	IN-EX	INSIGNIA, 2.0 CDTI	A 20 DTH	641463	5.0	10.03	46.7	A	S06

(D1) Internal diameter, (D2) External diameter, (B) Shape, (C) Material

VALVE GUIDES

IVT Ref.	Type	Model	Engine	OEM Ref.	D1	D2	Length	B	C
OPEL									
8186.105	IN-EX	INSIGNIA, 2.0 CDTI	A 20 DTH	641463	5.0	10.03	46.7	A	S06
8186.105	IN-EX	INSIGNIA, 2.0 CDTI	A 20 DTH	642699	5.0	10.03	46.7	A	S06
8186.105	IN-EX	INSIGNIA, 2.0 CDTI	A 20 DTH	642699	5.0	10.03	46.7	A	S06
8186.105	IN-EX	INSIGNIA, 2.0 CDTI	A 20 DTH	642700	5.0	10.03	46.7	A	S06
8186.105	IN-EX	INSIGNIA, 2.0 CDTI	A 20 DTH	642700	5.0	10.03	46.7	A	S06
8186.105	IN-EX	INSIGNIA, 2.0 CDTI	A 20 DTH	642701	5.0	10.03	46.7	A	S06
8186.105	IN-EX	INSIGNIA, 2.0 CDTI	A 20 DTH	642701	5.0	10.03	46.7	A	S06
8186.105	IN-EX	INSIGNIA, 2.0 CDTI	A 20 DTJ/A 20 DT	641463	5.0	10.03	46.7	A	S06
8186.105	IN-EX	INSIGNIA, 2.0 CDTI	A 20 DTJ/A 20 DT	642699	5.0	10.03	46.7	A	S06
8186.105	IN-EX	INSIGNIA, 2.0 CDTI	A 20 DTJ/A 20 DT	642700	5.0	10.03	46.7	A	S06
8186.105	IN-EX	INSIGNIA, 2.0 CDTI	A 20 DTJ/A 20 DT	642701	5.0	10.03	46.7	A	S06
8186.105	IN-EX	INSIGNIA, 2.0 CDTI	A 20 DTL/A 20 DTC	641463	5.0	10.03	46.7	A	S06
8186.105	IN-EX	INSIGNIA, 2.0 CDTI	A 20 DTL/A 20 DTC	642699	5.0	10.03	46.7	A	S06
8186.105	IN-EX	INSIGNIA, 2.0 CDTI	A 20 DTL/A 20 DTC	642700	5.0	10.03	46.7	A	S06
8186.105	IN-EX	INSIGNIA, 2.0 CDTI	A 20 DTL/A 20 DTC	642701	5.0	10.03	46.7	A	S06
8186.105	IN-EX	INSIGNIA, 2.0 CDTI 4x4	A 20 DTH	641463	5.0	10.03	46.7	A	S06
8186.105	IN-EX	INSIGNIA, 2.0 CDTI 4x4	A 20 DTH	641463	5.0	10.03	46.7	A	S06
8186.105	IN-EX	INSIGNIA, 2.0 CDTI 4x4	A 20 DTH	642699	5.0	10.03	46.7	A	S06
8186.105	IN-EX	INSIGNIA, 2.0 CDTI 4x4	A 20 DTH	642699	5.0	10.03	46.7	A	S06
8186.105	IN-EX	INSIGNIA, 2.0 CDTI 4x4	A 20 DTH	642700	5.0	10.03	46.7	A	S06
8186.105	IN-EX	INSIGNIA, 2.0 CDTI 4x4	A 20 DTH	642700	5.0	10.03	46.7	A	S06
8186.105	IN-EX	INSIGNIA, 2.0 CDTI 4x4	A 20 DTH	642701	5.0	10.03	46.7	A	S06
8186.105	IN-EX	INSIGNIA, 2.0 CDTI 4x4	A 20 DTH	642701	5.0	10.03	46.7	A	S06
8186.105	IN-EX	INSIGNIA, 2.0 E85 Turbo	A 20 NHT	641463	5.0	10.03	46.7	A	S06
8186.105	IN-EX	INSIGNIA, 2.0 E85 Turbo	A 20 NHT	642699	5.0	10.03	46.7	A	S06
8186.105	IN-EX	INSIGNIA, 2.0 E85 Turbo	A 20 NHT	642700	5.0	10.03	46.7	A	S06
8186.105	IN-EX	INSIGNIA, 2.0 E85 Turbo	A 20 NHT	642701	5.0	10.03	46.7	A	S06
8186.105	IN-EX	INSIGNIA, 2.0 Turbo	A 20 NHT	641463	5.0	10.03	46.7	A	S06
8186.105	IN-EX	INSIGNIA, 2.0 Turbo	A 20 NHT	642699	5.0	10.03	46.7	A	S06
8186.105	IN-EX	INSIGNIA, 2.0 Turbo	A 20 NHT	642700	5.0	10.03	46.7	A	S06
8186.105	IN-EX	INSIGNIA, 2.0 Turbo	A 20 NHT	642701	5.0	10.03	46.7	A	S06
8186.105	IN-EX	INSIGNIA, 2.0 Turbo 4x4	A 20 NFT	641463	5.0	10.03	46.7	A	S06
8186.105	IN-EX	INSIGNIA, 2.0 Turbo 4x4	A 20 NFT	642699	5.0	10.03	46.7	A	S06
8186.105	IN-EX	INSIGNIA, 2.0 Turbo 4x4	A 20 NFT	642700	5.0	10.03	46.7	A	S06
8186.105	IN-EX	INSIGNIA, 2.0 Turbo 4x4	A 20 NFT	642701	5.0	10.03	46.7	A	S06
8186.105	IN-EX	INSIGNIA, 2.0 Turbo 4x4	A 20 NHT	641463	5.0	10.03	46.7	A	S06
8186.105	IN-EX	INSIGNIA, 2.0 Turbo 4x4	A 20 NHT	642699	5.0	10.03	46.7	A	S06
8186.105	IN-EX	INSIGNIA, 2.0 Turbo 4x4	A 20 NHT	642700	5.0	10.03	46.7	A	S06
8186.105	IN-EX	INSIGNIA, 2.0 Turbo 4x4	A 20 NHT	642701	5.0	10.03	46.7	A	S06
8020.100	IN-EX	KADETT A Caravan, 1.0 S	10 S		7.0	11.03	45.8	A1	G
8039.105	IN-EX	KADETT A Caravan, 1.0 S	10 S		7.0	11.03	45.8	A1	S06
8020.100	IN-EX	KADETT A Coupe, 1.0 S	10 S		7.0	11.03	45.8	A1	G
8039.105	IN-EX	KADETT A Coupe, 1.0 S	10 S		7.0	11.03	45.8	A1	S06
8020.100	IN-EX	KADETT A, 1.0 S	10 S		7.0	11.03	45.8	A1	G
8039.105	IN-EX	KADETT A, 1.0 S	10 S		7.0	11.03	45.8	A1	S06
8020.100	IN-EX	KADETT B Caravan, 1.1	11 N		7.0	11.03	45.8	A1	G
8039.105	IN-EX	KADETT B Caravan, 1.1	11 N		7.0	11.03	45.8	A1	S06
8020.100	IN-EX	KADETT B Caravan, 1.1	11 N		7.0	11.03	45.8	A1	G
8039.105	IN-EX	KADETT B Caravan, 1.1	11 N		7.0	11.03	45.8	A1	S06
8020.100	IN-EX	KADETT B Caravan, 1.1	11 S		7.0	11.03	45.8	A1	G
8039.105	IN-EX	KADETT B Caravan, 1.1	11 S		7.0	11.03	45.8	A1	S06
8020.100	IN-EX	KADETT B Caravan, 1.2	12 S		7.0	11.03	45.8	A1	G
8039.105	IN-EX	KADETT B Caravan, 1.2	12 S		7.0	11.03	45.8	A1	S06
8020.100	IN-EX	KADETT B Coupe, 1.1	11 N		7.0	11.03	45.8	A1	G
8020.100	IN-EX	KADETT B Coupe, 1.1	11 N		7.0	11.03	45.8	A1	G
8039.105	IN-EX	KADETT B Coupe, 1.1	11 N		7.0	11.03	45.8	A1	S06
8039.105	IN-EX	KADETT B Coupe, 1.1	11 N		7.0	11.03	45.8	A1	S06
8020.100	IN-EX	KADETT B Coupe, 1.1	11 S		7.0	11.03	45.8	A1	G
8039.105	IN-EX	KADETT B Coupe, 1.1	11 S		7.0	11.03	45.8	A1	S06
8039.105	IN-EX	KADETT B Coupe, 1.1	11 SR		7.0	11.03	45.8	A1	S06
8020.100	IN-EX	KADETT B Coupe, 1.1	11 SR		7.0	11.03	45.8	A1	G
8039.105	IN-EX	KADETT B Coupe, 1.2	12 S		7.0	11.03	45.8	A1	S06

(D1) Internal diameter, (D2) External diameter, (B) Shape, (C) Material

VALVE GUIDES

OPEL

IVT Ref.	Type	Model	Engine	OEM Ref.	D1	D2	Length	B	C
8020.100	IN-EX	KADETT B Coupe, 1.2	12 S		7.0	11.03	45.8	A1	G
8039.105	IN-EX	KADETT B, 1.1	11 N		7.0	11.03	45.8	A1	S06
8020.100	IN-EX	KADETT B, 1.1	11 N		7.0	11.03	45.8	A1	G
8039.105	IN-EX	KADETT B, 1.1	11 N		7.0	11.03	45.8	A1	S06
8020.100	IN-EX	KADETT B, 1.1	11 N		7.0	11.03	45.8	A1	G
8020.100	IN-EX	KADETT B, 1.1 S	11 S		7.0	11.03	45.8	A1	G
8039.105	IN-EX	KADETT B, 1.1 S	11 S		7.0	11.03	45.8	A1	S06
8039.105	IN-EX	KADETT B, 1.1 SR	11 SR		7.0	11.03	45.8	A1	S06
8020.100	IN-EX	KADETT B, 1.1 SR	11 SR		7.0	11.03	45.8	A1	G
8039.105	IN-EX	KADETT B, 1.2 S	12 S		7.0	11.03	45.8	A1	S06
8020.100	IN-EX	KADETT B, 1.2 S	12 S		7.0	11.03	45.8	A1	G
8039.105	IN-EX	KADETT C Caravan, 1.2	12 N		7.0	11.03	45.8	A1	S06
8020.100	IN-EX	KADETT C Caravan, 1.2	12 N		7.0	11.03	45.8	A1	G
8039.105	IN-EX	KADETT C Caravan, 1.2	12 N		7.0	11.03	45.8	A1	S06
8020.100	IN-EX	KADETT C Caravan, 1.2	12 N		7.0	11.03	45.8	A1	G
8039.105	IN-EX	KADETT C Caravan, 1.2 S	12 S		7.0	11.03	45.8	A1	S06
8020.100	IN-EX	KADETT C Caravan, 1.2 S	12 S		7.0	11.03	45.8	A1	G
8039.105	IN-EX	KADETT C City, 1.2 S	12 S		7.0	11.03	45.8	A1	S06
8020.100	IN-EX	KADETT C City, 1.2 S	12 S		7.0	11.03	45.8	A1	G
8039.105	IN-EX	KADETT C Coupe, 1.2	12 N		7.0	11.03	45.8	A1	S06
8039.105	IN-EX	KADETT C Coupe, 1.2	12 N		7.0	11.03	45.8	A1	S06
8020.100	IN-EX	KADETT C Coupe, 1.2	12 N		7.0	11.03	45.8	A1	G
8020.100	IN-EX	KADETT C Coupe, 1.2	12 N		7.0	11.03	45.8	A1	G
8039.105	IN-EX	KADETT C Coupe, 1.2 S	12 S		7.0	11.03	45.8	A1	S06
8020.100	IN-EX	KADETT C Coupe, 1.2 S	12 S		7.0	11.03	45.8	A1	G
8020.100	IN-EX	KADETT C, 1.2	12 N		7.0	11.03	45.8	A1	G
8020.100	IN-EX	KADETT C, 1.2	12 N		7.0	11.03	45.8	A1	G
8039.105	IN-EX	KADETT C, 1.2	12 N		7.0	11.03	45.8	A1	S06
8039.105	IN-EX	KADETT C, 1.2	12 N		7.0	11.03	45.8	A1	S06
8020.100	IN-EX	KADETT C, 1.2 S	12 S		7.0	11.03	45.8	A1	G
8039.105	IN-EX	KADETT C, 1.2 S	12 S		7.0	11.03	45.8	A1	S06
8020.100	IN-EX	KADETT D (31_-34_, 41_-44_), 1.	12 N		7.0	11.03	45.8	A1	G
8039.105	IN-EX	KADETT D (31_-34_, 41_-44_), 1.	12 N		7.0	11.03	45.8	A1	S06
8039.105	IN-EX	KADETT D (31_-34_, 41_-44_), 1.	12 ST		7.0	11.03	45.8	A1	S06
8020.100	IN-EX	KADETT D (31_-34_, 41_-44_), 1.	12 ST		7.0	11.03	45.8	A1	G
8039.105	IN-EX	KADETT D (31_-34_, 41_-44_), 1.	12 S		7.0	11.03	45.8	A1	S06
8020.100	IN-EX	KADETT D (31_-34_, 41_-44_), 1.	12 S		7.0	11.03	45.8	A1	G
8039.105	IN-EX	KADETT D (31_-34_, 41_-44_), 1.	13 N		7.0	11.03	45.8	A1	S06
8020.100	IN-EX	KADETT D (31_-34_, 41_-44_), 1.	13 N		7.0	11.03	45.8	A1	G
8039.105	IN-EX	KADETT D (31_-34_, 41_-44_), 1.	13 S		7.0	11.03	45.8	A1	S06
8020.100	IN-EX	KADETT D (31_-34_, 41_-44_), 1.	13 S		7.0	11.03	45.8	A1	G
8176.100	IN-EX	KADETT D (31_-34_, 41_-44_), 1.	16 D	0642008	8.0	12.05	50.0	A-1	G
8039.105	IN-EX	KADETT D (32_,37_,39, _42), 1.2	12 S		7.0	11.03	45.8	A1	S06
8020.100	IN-EX	KADETT D (32_,37_,39, _42), 1.2	12 S		7.0	11.03	45.8	A1	G
8020.100	IN-EX	KADETT D (32_,37_,39, _42), 1.3	C 13 N		7.0	11.03	45.8	A1	G
8039.105	IN-EX	KADETT D (32_,37_,39, _42), 1.3	C 13 N		7.0	11.03	45.8	A1	S06
8039.105	IN-EX	KADETT D (32_,37_,39, _42), 1.3	13 S		7.0	11.03	45.8	A1	S06
8020.100	IN-EX	KADETT D (32_,37_,39, _42), 1.3	13 S		7.0	11.03	45.8	A1	G
8176.100	IN-EX	KADETT D (32_,37_,39, _42), 1.6	16 D	0642008	8.0	12.05	50.0	A-1	G
8020.100	IN-EX	KADETT D Caravan (35_, 36_, 45	12 N		7.0	11.03	45.8	A1	G
8039.105	IN-EX	KADETT D Caravan (35_, 36_, 45	12 N		7.0	11.03	45.8	A1	S06
8039.105	IN-EX	KADETT D Caravan (35_, 36_, 45	12 S		7.0	11.03	45.8	A1	S06
8020.100	IN-EX	KADETT D Caravan (35_, 36_, 45	12 S		7.0	11.03	45.8	A1	G
8020.100	IN-EX	KADETT D Caravan (35_, 36_, 45	13 N		7.0	11.03	45.8	A1	G
8039.105	IN-EX	KADETT D Caravan (35_, 36_, 45	13 N		7.0	11.03	45.8	A1	S06
8039.105	IN-EX	KADETT D Caravan (35_, 36_, 45	13 S		7.0	11.03	45.8	A1	S06
8020.100	IN-EX	KADETT D Caravan (35_, 36_, 45	13 S		7.0	11.03	45.8	A1	G
8176.100	IN-EX	KADETT D Caravan (35_, 36_, 45	16 D	0642008	8.0	12.05	50.0	A-1	G
8020.100	IN-EX	KADETT E (39_, 49_), 1.2	12 SC		7.0	11.03	45.8	A1	G
8039.105	IN-EX	KADETT E (39_, 49_), 1.2	12 SC		7.0	11.03	45.8	A1	S06
8020.100	IN-EX	KADETT E (39_, 49_), 1.3 i KAT	C 13 N		7.0	11.03	45.8	A1	G
8039.105	IN-EX	KADETT E (39_, 49_), 1.3 i KAT	C 13 N		7.0	11.03	45.8	A1	S06

(D1) Internal diameter, (D2) External diameter, (B) Shape, (C) Material

VALVE GUIDES

OPEL

IVT Ref.	Type	Model	Engine	OEM Ref.	D1	D2	Length	B	C
8039.105	IN-EX	KADETT E (39_, 49_), 1.3 N	13 NB/13 N		7.0	11.03	45.8	A1	S06
8020.100	IN-EX	KADETT E (39_, 49_), 1.3 N	13 NB/13 N		7.0	11.03	45.8	A1	G
8020.100	IN-EX	KADETT E (39_, 49_), 1.3 S	13 S		7.0	11.03	45.8	A1	G
8020.100	IN-EX	KADETT E (39_, 49_), 1.4 i	C 14 NZ		7.0	11.03	45.8	A1	G
8039.105	IN-EX	KADETT E (39_, 49_), 1.4 i	C 14 NZ		7.0	11.03	45.8	A1	S06
8039.105	IN-EX	KADETT E (39_, 49_), 1.4 S	14 NV		7.0	11.03	45.8	A1	S06
8020.100	IN-EX	KADETT E (39_, 49_), 1.4 S	14 NV		7.0	11.03	45.8	A1	G
8176.100	IN-EX	KADETT E (39_, 49_), 1.6 D	16 DA/16 D	0642008	8.0	12.05	50.0	A-1	G
8039.105	IN-EX	KADETT E (39_, 49_), 1.6 i	E 16 NZ		7.0	11.03	45.8	A1	S06
8020.100	IN-EX	KADETT E (39_, 49_), 1.6 i	E 16 NZ		7.0	11.03	45.8	A1	G
8020.100	IN-EX	KADETT E (39_, 49_), 1.6 i KAT	C 16 NZ/C 16 LZ		7.0	11.03	45.8	A1	G
8039.105	IN-EX	KADETT E (39_, 49_), 1.6 i KAT	C 16 NZ/C 16 LZ		7.0	11.03	45.8	A1	S06
8039.105	IN-EX	KADETT E (39_, 49_), 1.6 S	16 SV		7.0	11.03	45.8	A1	S06
8020.100	IN-EX	KADETT E (39_, 49_), 1.6 S	16 SV		7.0	11.03	45.8	A1	G
8176.100	IN-EX	KADETT E (39_, 49_), 1.7 D	17 D	0642008	8.0	12.05	50.0	A-1	G
8039.105	IN-EX	KADETT E (39_, 49_), 1.8 i	C 18 NZ/C 18 NT/18 SV		7.0	11.03	45.8	A1	S06
8020.100	IN-EX	KADETT E (39_, 49_), 1.8 i	C 18 NZ/C 18 NT/18 SV		7.0	11.03	45.8	A1	G
8039.105	IN-EX	KADETT E (39_, 49_), 1.8 S	E 18 NV		7.0	11.03	45.8	A1	S06
8020.100	IN-EX	KADETT E (39_, 49_), 1.8 S	E 18 NV		7.0	11.03	45.8	A1	G
8039.105	IN-EX	KADETT E (39_, 49_), 2.0 i	20 NE/20 SE		7.0	11.03	45.8	A1	S06
8020.100	IN-EX	KADETT E (39_, 49_), 2.0 i	20 NE/20 SE		7.0	11.03	45.8	A1	G
8039.105	IN-EX	KADETT E (39_, 49_), 2.0 i KAT	C 20 NE		7.0	11.03	45.8	A1	S06
8020.100	IN-EX	KADETT E (39_, 49_), 2.0 i KAT	C 20 NE		7.0	11.03	45.8	A1	G
8039.105	IN-EX	KADETT E Cabriolet (43B_), 1.3 S	13 S		7.0	11.03	45.8	A1	S06
8020.100	IN-EX	KADETT E Cabriolet (43B_), 1.3 S	13 S		7.0	11.03	45.8	A1	G
8020.100	IN-EX	KADETT E Cabriolet (43B_), 1.4 i	C 14 NZ		7.0	11.03	45.8	A1	G
8020.100	IN-EX	KADETT E Cabriolet (43B_), 1.4 S	14 NV		7.0	11.03	45.8	A1	G
8039.105	IN-EX	KADETT E Cabriolet (43B_), 1.4 S	14 NV		7.0	11.03	45.8	A1	S06
8039.105	IN-EX	KADETT E Cabriolet (43B_), 1.6 i	16 SV		7.0	11.03	45.8	A1	S06
8020.100	IN-EX	KADETT E Cabriolet (43B_), 1.6 i	16 SV		7.0	11.03	45.8	A1	G
8020.100	IN-EX	KADETT E Cabriolet (43B_), 1.6 i	E 16 NZ		7.0	11.03	45.8	A1	G
8039.105	IN-EX	KADETT E Cabriolet (43B_), 1.6 i	E 16 NZ		7.0	11.03	45.8	A1	S06
8039.105	IN-EX	KADETT E Cabriolet (43B_), 1.6 i	C 16 NZ/C 16 LZ		7.0	11.03	45.8	A1	S06
8020.100	IN-EX	KADETT E Cabriolet (43B_), 1.6 i	C 16 NZ/C 16 LZ		7.0	11.03	45.8	A1	G
8039.105	IN-EX	KADETT E Cabriolet (43B_), 2.0 i	20 NE		7.0	11.03	45.8	A1	S06
8020.100	IN-EX	KADETT E Cabriolet (43B_), 2.0 i	20 NE		7.0	11.03	45.8	A1	G
8039.105	IN-EX	KADETT E Cabriolet (43B_), 2.0 i	C 20 NE		7.0	11.03	45.8	A1	S06
8020.100	IN-EX	KADETT E Cabriolet (43B_), 2.0 i	C 20 NE		7.0	11.03	45.8	A1	G
8020.100	IN-EX	KADETT E Caravan (35_, 36_, 45	12 SC		7.0	11.03	45.8	A1	G
8039.105	IN-EX	KADETT E Caravan (35_, 36_, 45	12 SC		7.0	11.03	45.8	A1	S06
8020.100	IN-EX	KADETT E Caravan (35_, 36_, 45	13 S		7.0	11.03	45.8	A1	G
8039.105	IN-EX	KADETT E Caravan (35_, 36_, 45	13 S		7.0	11.03	45.8	A1	S06
8039.105	IN-EX	KADETT E Caravan (35_, 36_, 45	C 13 N		7.0	11.03	45.8	A1	S06
8020.100	IN-EX	KADETT E Caravan (35_, 36_, 45	C 13 N		7.0	11.03	45.8	A1	G
8039.105	IN-EX	KADETT E Caravan (35_, 36_, 45	13 N		7.0	11.03	45.8	A1	S06
8020.100	IN-EX	KADETT E Caravan (35_, 36_, 45	13 N		7.0	11.03	45.8	A1	G
8020.100	IN-EX	KADETT E Caravan (35_, 36_, 45	13 S		7.0	11.03	45.8	A1	G
8039.105	IN-EX	KADETT E Caravan (35_, 36_, 45	13 S		7.0	11.03	45.8	A1	S06
8039.105	IN-EX	KADETT E Caravan (35_, 36_, 45	C 14 NZ		7.0	11.03	45.8	A1	S06
8020.100	IN-EX	KADETT E Caravan (35_, 36_, 45	C 14 NZ		7.0	11.03	45.8	A1	G
8020.100	IN-EX	KADETT E Caravan (35_, 36_, 45	14 NV		7.0	11.03	45.8	A1	G
8039.105	IN-EX	KADETT E Caravan (35_, 36_, 45	14 NV		7.0	11.03	45.8	A1	S06
8020.100	IN-EX	KADETT E Caravan (35_, 36_, 45	16 SV		7.0	11.03	45.8	A1	G
8039.105	IN-EX	KADETT E Caravan (35_, 36_, 45	16 SV		7.0	11.03	45.8	A1	S06
8176.100	IN-EX	KADETT E Caravan (35_, 36_, 45	16 DA/16 D	0642008	8.0	12.05	50.0	A-1	G
8039.105	IN-EX	KADETT E Caravan (35_, 36_, 45	E 16 NZ		7.0	11.03	45.8	A1	S06
8020.100	IN-EX	KADETT E Caravan (35_, 36_, 45	E 16 NZ		7.0	11.03	45.8	A1	G
8039.105	IN-EX	KADETT E Caravan (35_, 36_, 45	C 16 NZ/C 16 LZ		7.0	11.03	45.8	A1	S06
8020.100	IN-EX	KADETT E Caravan (35_, 36_, 45	C 16 NZ/C 16 LZ		7.0	11.03	45.8	A1	G
8176.100	IN-EX	KADETT E Caravan (35_, 36_, 45	17 D	0642008	8.0	12.05	50.0	A-1	G
8039.105	IN-EX	KADETT E Caravan (35_, 36_, 45	C 18 NZ/C 18 NT		7.0	11.03	45.8	A1	S06
8020.100	IN-EX	KADETT E Caravan (35_, 36_, 45	C 18 NZ/C 18 NT		7.0	11.03	45.8	A1	G

(D1) Internal diameter, (D2) External diameter, (B) Shape, (C) Material

VALVE GUIDES

OPEL

IVT Ref.	Type	Model	Engine	OEM Ref.	D1	D2	Length	B	C
8039.105	IN-EX	KADETT E Caravan (35_, 36_, 45	E 18 NV		7.0	11.03	45.8	A1	S06
8020.100	IN-EX	KADETT E Caravan (35_, 36_, 45	E 18 NV		7.0	11.03	45.8	A1	G
8020.100	IN-EX	KADETT E Caravan (35_, 36_, 45	20 NE		7.0	11.03	45.8	A1	G
8039.105	IN-EX	KADETT E Caravan (35_, 36_, 45	20 NE		7.0	11.03	45.8	A1	S06
8020.100	IN-EX	KADETT E Caravan (35_, 36_, 45	C 20 NE		7.0	11.03	45.8	A1	G
8039.105	IN-EX	KADETT E Caravan (35_, 36_, 45	C 20 NE		7.0	11.03	45.8	A1	S06
8020.100	IN-EX	KADETT E CC (33_, 34_, 43_, 44	12 SC		7.0	11.03	45.8	A1	G
8039.105	IN-EX	KADETT E CC (33_, 34_, 43_, 44	12 SC		7.0	11.03	45.8	A1	S06
8039.105	IN-EX	KADETT E CC (33_, 34_, 43_, 44	13 S		7.0	11.03	45.8	A1	S06
8020.100	IN-EX	KADETT E CC (33_, 34_, 43_, 44	13 S		7.0	11.03	45.8	A1	G
8039.105	IN-EX	KADETT E CC (33_, 34_, 43_, 44	C 13 N		7.0	11.03	45.8	A1	S06
8020.100	IN-EX	KADETT E CC (33_, 34_, 43_, 44	C 13 N		7.0	11.03	45.8	A1	G
8039.105	IN-EX	KADETT E CC (33_, 34_, 43_, 44	13 NB/13 N		7.0	11.03	45.8	A1	S06
8020.100	IN-EX	KADETT E CC (33_, 34_, 43_, 44	13 NB/13 N		7.0	11.03	45.8	A1	G
8020.100	IN-EX	KADETT E CC (33_, 34_, 43_, 44	13 S		7.0	11.03	45.8	A1	G
8039.105	IN-EX	KADETT E CC (33_, 34_, 43_, 44	13 S		7.0	11.03	45.8	A1	S06
8020.100	IN-EX	KADETT E CC (33_, 34_, 43_, 44	C 14 NZ		7.0	11.03	45.8	A1	G
8039.105	IN-EX	KADETT E CC (33_, 34_, 43_, 44	C 14 NZ		7.0	11.03	45.8	A1	S06
8039.105	IN-EX	KADETT E CC (33_, 34_, 43_, 44	14 NV		7.0	11.03	45.8	A1	S06
8020.100	IN-EX	KADETT E CC (33_, 34_, 43_, 44	14 NV		7.0	11.03	45.8	A1	G
8020.100	IN-EX	KADETT E CC (33_, 34_, 43_, 44	C 14 SE		7.0	11.03	45.8	A1	G
8039.105	IN-EX	KADETT E CC (33_, 34_, 43_, 44	C 14 SE		7.0	11.03	45.8	A1	S06
8176.100	IN-EX	KADETT E CC (33_, 34_, 43_, 44	16 DA/16 D	0642008	8.0	12.05	50.0	A-1	G
8020.100	IN-EX	KADETT E CC (33_, 34_, 43_, 44	E 16 NZ		7.0	11.03	45.8	A1	G
8039.105	IN-EX	KADETT E CC (33_, 34_, 43_, 44	E 16 NZ		7.0	11.03	45.8	A1	S06
8020.100	IN-EX	KADETT E CC (33_, 34_, 43_, 44	C 16 NZ/C 16 LZ		7.0	11.03	45.8	A1	G
8039.105	IN-EX	KADETT E CC (33_, 34_, 43_, 44	C 16 NZ/C 16 LZ		7.0	11.03	45.8	A1	S06
8020.100	IN-EX	KADETT E CC (33_, 34_, 43_, 44	16 SV		7.0	11.03	45.8	A1	G
8039.105	IN-EX	KADETT E CC (33_, 34_, 43_, 44	16 SV		7.0	11.03	45.8	A1	S06
8176.100	IN-EX	KADETT E CC (33_, 34_, 43_, 44	17 D	0642008	8.0	12.05	50.0	A-1	G
8039.105	IN-EX	KADETT E CC (33_, 34_, 43_, 44	C 18 NZ/S 18 NV/C 18 NT		7.0	11.03	45.8	A1	S06
8020.100	IN-EX	KADETT E CC (33_, 34_, 43_, 44	C 18 NZ/S 18 NV/C 18 NT		7.0	11.03	45.8	A1	G
8039.105	IN-EX	KADETT E CC (33_, 34_, 43_, 44	E 18 NV/S 18 NV		7.0	11.03	45.8	A1	S06
8020.100	IN-EX	KADETT E CC (33_, 34_, 43_, 44	E 18 NV/S 18 NV		7.0	11.03	45.8	A1	G
8020.100	IN-EX	KADETT E CC (33_, 34_, 43_, 44	20 NE		7.0	11.03	45.8	A1	G
8039.105	IN-EX	KADETT E CC (33_, 34_, 43_, 44	20 NE		7.0	11.03	45.8	A1	S06
8039.105	IN-EX	KADETT E CC (33_, 34_, 43_, 44	20 SEH		7.0	11.03	45.8	A1	S06
8020.100	IN-EX	KADETT E CC (33_, 34_, 43_, 44	20 SEH		7.0	11.03	45.8	A1	G
8039.105	IN-EX	KADETT E CC (33_, 34_, 43_, 44	C 20 NE		7.0	11.03	45.8	A1	S06
8020.100	IN-EX	KADETT E CC (33_, 34_, 43_, 44	C 20 NE		7.0	11.03	45.8	A1	G
8039.105	IN-EX	KADETT E Combo (38_, 48_), 1.3	13 N		7.0	11.03	45.8	A1	S06
8020.100	IN-EX	KADETT E Combo (38_, 48_), 1.3	13 N		7.0	11.03	45.8	A1	G
8039.105	IN-EX	KADETT E Combo (38_, 48_), 1.4	C 14 NZ		7.0	11.03	45.8	A1	S06
8020.100	IN-EX	KADETT E Combo (38_, 48_), 1.4	C 14 NZ		7.0	11.03	45.8	A1	G
8176.100	IN-EX	KADETT E Combo (38_, 48_), 1.6	16 DA	0642008	8.0	12.05	50.0	A-1	G
8020.100	IN-EX	KADETT E Combo (38_, 48_), 1.6	C 16 NZ		7.0	11.03	45.8	A1	G
8039.105	IN-EX	KADETT E Combo (38_, 48_), 1.6	C 16 NZ		7.0	11.03	45.8	A1	S06
8176.100	IN-EX	KADETT E Combo (38_, 48_), 1.7	17 D	0642008	8.0	12.05	50.0	A-1	G
8176.100	IN-EX	KADETT E Combo (38_, 48_), 1.7	17 DR	0642008	8.0	12.05	50.0	A-1	G
8020.100	IN-EX	KADETT E Kasten (37_, 47_), 1.2	12 SC		7.0	11.03	45.8	A1	G
8039.105	IN-EX	KADETT E Kasten (37_, 47_), 1.2	12 SC		7.0	11.03	45.8	A1	S06
8020.100	IN-EX	KADETT E Kasten (37_, 47_), 1.3	13 NB/13 N		7.0	11.03	45.8	A1	G
8039.105	IN-EX	KADETT E Kasten (37_, 47_), 1.3	13 NB/13 N		7.0	11.03	45.8	A1	S06
8039.105	IN-EX	KADETT E Kasten (37_, 47_), 1.4	C 14 NZ		7.0	11.03	45.8	A1	S06
8020.100	IN-EX	KADETT E Kasten (37_, 47_), 1.4	C 14 NZ		7.0	11.03	45.8	A1	G
8176.100	IN-EX	KADETT E Kasten (37_, 47_), 1.6	16 DA/16 D	0642008	8.0	12.05	50.0	A-1	G
8020.100	IN-EX	KADETT E Kasten (37_, 47_), 1.6	C 16 NZ		7.0	11.03	45.8	A1	G
8039.105	IN-EX	KADETT E Kasten (37_, 47_), 1.6	C 16 NZ		7.0	11.03	45.8	A1	S06
8176.100	IN-EX	KADETT E Kasten (37_, 47_), 1.7	17 D	0642008	8.0	12.05	50.0	A-1	G
8039.105	IN-EX	MANTA A (58_, 59_), 1.2	12 S		7.0	11.03	45.8	A1	S06
8020.100	IN-EX	MANTA A (58_, 59_), 1.2	12 S		7.0	11.03	45.8	A1	G
8039.105	IN-EX	MANTA B (58_, 59_), 1.2 N	12 N		7.0	11.03	45.8	A1	S06

(D1) Internal diameter, (D2) External diameter, (B) Shape, (C) Material

VALVE GUIDES

IVT Ref.	Type	Model	Engine	OEM Ref.	D1	D2	Length	B	C
OPEL									
8020.100	IN-EX	MANTA B (58_, 59_), 1.2 N	12 N		7.0	11.03	45.8	A1	G
8039.105	IN-EX	MANTA B (58_, 59_), 1.2 S	12 S		7.0	11.03	45.8	A1	S06
8020.100	IN-EX	MANTA B (58_, 59_), 1.2 S	12 S		7.0	11.03	45.8	A1	G
8039.105	IN-EX	MANTA B (58_, 59_), 1.3 N	13 N		7.0	11.03	45.8	A1	S06
8020.100	IN-EX	MANTA B (58_, 59_), 1.3 N	13 N		7.0	11.03	45.8	A1	G
8039.105	IN-EX	MANTA B (58_, 59_), 1.3 S	13 S		7.0	11.03	45.8	A1	S06
8020.100	IN-EX	MANTA B (58_, 59_), 1.3 S	13 S		7.0	11.03	45.8	A1	G
8039.105	IN-EX	MANTA B CC (53_, 55_), 1.3 N	13 N		7.0	11.03	45.8	A1	S06
8020.100	IN-EX	MANTA B CC (53_, 55_), 1.3 N	13 N		7.0	11.03	45.8	A1	G
8039.105	IN-EX	MANTA B CC (53_, 55_), 1.3 S	13 S		7.0	11.03	45.8	A1	S06
8020.100	IN-EX	MANTA B CC (53_, 55_), 1.3 S	13 S		7.0	11.03	45.8	A1	G
8133.600	IN-EX	MERIVA B, 1.7 CDTI	A 17 DT	12204PLZD00	6.0	11.05	42.0	F	G1
8133.600	IN-EX	MERIVA B, 1.7 CDTI	A 17 DTI/A 17 DTC	12204PLZD00	6.0	11.05	42.0	F	G1
8133.600	IN-EX	MERIVA B, 1.7 CDTI	A 17 DTS	12204PLZD00	6.0	11.05	42.0	F	G1
8040.605	IN-EX	MERIVA, 1.4 16V Twinport	Z 14 XEP	9158589	5.0	10.03	39.0	F	S06
8040.605	IN-EX	MERIVA, 1.4 16V Twinport LPG	Z 14 XEP	9158589	5.0	10.03	39.0	F	S06
8027.600	IN-EX	MERIVA, 1.6 16V	Z 16 XE		6.0	10.03	45.0	F	G1
8133.600	IN-EX	MERIVA, 1.7 CDTI	A 17 DTR/Z 17 DTR	12204PLZD00	6.0	11.05	42.0	F	G1
8133.600	IN-EX	MERIVA, 1.7 CDTI	Z 17 DTH/Z 17 DT	12204PLZD00	6.0	11.05	42.0	F	G1
8133.600	IN-EX	MERIVA, 1.7 DTI	Y 17 DT	12204PLZD00	6.0	11.05	42.0	F	G1
8040.605	IN-EX	MERIVA, 1.8	Z 18 XE	9158589	5.0	10.03	39.0	F	S06
8095.600	IN-EX	Movano 2.5 D	S8U 772	4749395	8.0	13.03	56.0	F	G1
8095.600	IN-EX	Movano 2.8 DTI	S9W 700	4749395	8.0	13.03	56.0	F	G1
8095.600	IN-EX	Movano 2.8 DTI	S9W 702	4749395	8.0	13.03	56.0	F	G1
8157.601	IN-EX	MOVANO Combi (J9), 2.2 DTI	G9T 722/G9T 720/G9T 750	8200562080	6.0	11.07	40.5	F	B
8141.100	IN-EX	MOVANO Combi (J9), 2.5 D	S8U 772/S8U 770	4726483	8.0	13.03	60.0	A	G1
8035.601	IN-EX	MOVANO Combi (J9), 2.5 DTI	G9U 754/G9U 750/G9U 724/		6.0	11.07	40.5	F	B
8141.100	IN-EX	MOVANO Combi (J9), 2.8 DTI	S9W 702/S9W 700	4726483	8.0	13.03	60.0	A	G1
8069.601	IN-EX	Movano Combi 1.9 DTI	F9Q 770	7700859086	7.0	12.06	38.3	F-1	B
8069.601	IN-EX	Movano Combi 1.9 DTI	F9Q 770	7700859086	7.0	12.06	38.3	F-1	B
8069.601	IN-EX	Movano Combi 1.9 DTI	F9Q 770	M889393	7.0	12.06	38.3	F-1	B
8069.601	IN-EX	Movano Combi 1.9 DTI	F9Q 770	M889393	7.0	12.06	38.3	F-1	B
8069.601	IN-EX	Movano Combi 1.9 DTI	F9Q 772	7700859086	7.0	12.06	38.3	F-1	B
8069.601	IN-EX	Movano Combi 1.9 DTI	F9Q 772	7700859086	7.0	12.06	38.3	F-1	B
8069.601	IN-EX	Movano Combi 1.9 DTI	F9Q 772	M889393	7.0	12.06	38.3	F-1	B
8069.601	IN-EX	Movano Combi 1.9 DTI	F9Q 772	M889393	7.0	12.06	38.3	F-1	B
8069.601	IN-EX	Movano Combi 1.9 DTI	F9Q 774	7700859086	7.0	12.06	38.3	F-1	B
8069.601	IN-EX	Movano Combi 1.9 DTI	F9Q 774	7700859086	7.0	12.06	38.3	F-1	B
8069.601	IN-EX	Movano Combi 1.9 DTI	F9Q 774	M889393	7.0	12.06	38.3	F-1	B
8069.601	IN-EX	Movano Combi 1.9 DTI	F9Q 774	M889393	7.0	12.06	38.3	F-1	B
8095.600	IN-EX	Movano Combi 2.5 D	S8U 772	4749395	8.0	13.03	56.0	F	G1
8095.600	IN-EX	Movano Combi 2.8 DTI	S9W 700	4749395	8.0	13.03	56.0	F	G1
8095.600	IN-EX	Movano Combi 2.8 DTI	S9W 702	4749395	8.0	13.03	56.0	F	G1
8069.601	IN-EX	Movano Furgonato 1.9 DTI	F9Q 770	7700859086	7.0	12.06	38.3	F-1	B
8069.601	IN-EX	Movano Furgonato 1.9 DTI	F9Q 770	7700859086	7.0	12.06	38.3	F-1	B
8069.601	IN-EX	Movano Furgonato 1.9 DTI	F9Q 770	M889393	7.0	12.06	38.3	F-1	B
8069.601	IN-EX	Movano Furgonato 1.9 DTI	F9Q 770	M889393	7.0	12.06	38.3	F-1	B
8069.601	IN-EX	Movano Furgonato 1.9 DTI	F9Q 772	7700859086	7.0	12.06	38.3	F-1	B
8069.601	IN-EX	Movano Furgonato 1.9 DTI	F9Q 772	7700859086	7.0	12.06	38.3	F-1	B
8069.601	IN-EX	Movano Furgonato 1.9 DTI	F9Q 772	M889393	7.0	12.06	38.3	F-1	B
8069.601	IN-EX	Movano Furgonato 1.9 DTI	F9Q 772	M889393	7.0	12.06	38.3	F-1	B
8069.601	IN-EX	Movano Furgonato 1.9 DTI	F9Q 774	7700859086	7.0	12.06	38.3	F-1	B
8069.601	IN-EX	Movano Furgonato 1.9 DTI	F9Q 774	7700859086	7.0	12.06	38.3	F-1	B
8069.601	IN-EX	Movano Furgonato 1.9 DTI	F9Q 774	M889393	7.0	12.06	38.3	F-1	B
8069.601	IN-EX	Movano Furgonato 1.9 DTI	F9Q 774	M889393	7.0	12.06	38.3	F-1	B
8095.600	IN-EX	Movano Furgonato 2.5 D	S8U 772	4749395	8.0	13.03	56.0	F	G1
8157.601	IN-EX	MOVANO Kasten (F9), 2.2 DTI	G9T 722/G9T 720/G9T 750	8200562080	6.0	11.07	40.5	F	B
8141.100	IN-EX	MOVANO Kasten (F9), 2.5 D	S8U 772/S8U 770	4726483	8.0	13.03	60.0	A	G1
8035.601	IN-EX	MOVANO Kasten (F9), 2.5 DTI	G9U 754/G9U 724/G9U 720		6.0	11.07	40.5	F	B
8141.100	IN-EX	MOVANO Kasten (F9), 2.8 DTI	S9W 702/S9W 700	4726483	8.0	13.03	60.0	A	G1
8157.601	IN-EX	MOVANO Kipper (H9), 2.2 DTI	G9T 722/G9T 720/G9T 750	8200562080	6.0	11.07	40.5	F	B
8141.100	IN-EX	MOVANO Kipper (H9), 2.5 D	S8U 772/S8U 770	4726483	8.0	13.03	60.0	A	G1

(D1) Internal diameter, (D2) External diameter, (B) Shape, (C) Material

VALVE GUIDES

OPEL

IVT Ref.	Type	Model	Engine	OEM Ref.	D1	D2	Length	B	C
8035.601	IN-EX	MOVANO Kipper (H9), 2.5 DTI	G9U 754/G9U 750/G9U 724/		6.0	11.07	40.5	F	B
8141.100	IN-EX	MOVANO Kipper (H9), 2.8 DTI	S9W 702/S9W 700	4726483	8.0	13.03	60.0	A	G1
8157.601	IN-EX	MOVANO Pritsche/Fahrgestell (U	G9T 722/G9T 720/G9T 750	8200562080	6.0	11.07	40.5	F	B
8141.100	IN-EX	MOVANO Pritsche/Fahrgestell (U	S8U 772/S8U 770	4726483	8.0	13.03	60.0	A	G1
8035.601	IN-EX	MOVANO Pritsche/Fahrgestell (U	G9U 754/G9U 750/G9U 724/		6.0	11.07	40.5	F	B
8141.100	IN-EX	MOVANO Pritsche/Fahrgestell (U	S9W 702/S9W 700	4726483	8.0	13.03	60.0	A	G1
8095.600	IN-EX	Movano Ribaltabile 2.5 D	S8U 772	4749395	8.0	13.03	56.0	F	G1
8095.600	IN-EX	Movano Ribaltabile 2.8 DTI	S9W 700	4749395	8.0	13.03	56.0	F	G1
8095.600	IN-EX	Movano Ribaltabile 2.8 DTI	S9W 702	4749395	8.0	13.03	56.0	F	G1
8020.100	IN-EX	OLYMPIA A Coupe, 1.0	11 SR		7.0	11.03	45.8	A1	G
8039.105	IN-EX	OLYMPIA A Coupe, 1.0	11 SR		7.0	11.03	45.8	A1	S06
8020.100	IN-EX	OLYMPIA A, 1.0	11 SR		7.0	11.03	45.8	A1	G
8039.105	IN-EX	OLYMPIA A, 1.0	11 SR		7.0	11.03	45.8	A1	S06
8020.100	IN-EX	OMEGA A (16_, 17_, 19_), 1.8	18 SEH		7.0	11.03	45.8	A1	G
8039.105	IN-EX	OMEGA A (16_, 17_, 19_), 1.8	18 SEH		7.0	11.03	45.8	A1	S06
8039.105	IN-EX	OMEGA A (16_, 17_, 19_), 1.8	E 18 NVR		7.0	11.03	45.8	A1	S06
8020.100	IN-EX	OMEGA A (16_, 17_, 19_), 1.8	E 18 NVR		7.0	11.03	45.8	A1	G
8039.105	IN-EX	OMEGA A (16_, 17_, 19_), 1.8 N	18 NV		7.0	11.03	45.8	A1	S06
8020.100	IN-EX	OMEGA A (16_, 17_, 19_), 1.8 N	18 NV		7.0	11.03	45.8	A1	G
8020.100	IN-EX	OMEGA A (16_, 17_, 19_), 1.8 S	18 SV		7.0	11.03	45.8	A1	G
8039.105	IN-EX	OMEGA A (16_, 17_, 19_), 1.8 S	18 SV		7.0	11.03	45.8	A1	S06
8020.100	IN-EX	OMEGA A (16_, 17_, 19_), 2.0	20 SE		7.0	11.03	45.8	A1	G
8039.105	IN-EX	OMEGA A (16_, 17_, 19_), 2.0	20 SE		7.0	11.03	45.8	A1	S06
8039.105	IN-EX	OMEGA A (16_, 17_, 19_), 2.0	C 20 NEF		7.0	11.03	45.8	A1	S06
8020.100	IN-EX	OMEGA A (16_, 17_, 19_), 2.0	C 20 NEF		7.0	11.03	45.8	A1	G
8039.105	IN-EX	OMEGA A (16_, 17_, 19_), 2.0	C 20 NEJ		7.0	11.03	45.8	A1	S06
8020.100	IN-EX	OMEGA A (16_, 17_, 19_), 2.0	C 20 NEJ		7.0	11.03	45.8	A1	G
8039.105	IN-EX	OMEGA A (16_, 17_, 19_), 2.0 i	C 20 NE		7.0	11.03	45.8	A1	S06
8020.100	IN-EX	OMEGA A (16_, 17_, 19_), 2.0 i	C 20 NE		7.0	11.03	45.8	A1	G
8020.100	IN-EX	OMEGA A Caravan (66_, 67_), 1.	18 SEH		7.0	11.03	45.8	A1	G
8039.105	IN-EX	OMEGA A Caravan (66_, 67_), 1.	18 SEH		7.0	11.03	45.8	A1	S06
8039.105	IN-EX	OMEGA A Caravan (66_, 67_), 1.	E 18 NVR		7.0	11.03	45.8	A1	S06
8020.100	IN-EX	OMEGA A Caravan (66_, 67_), 1.	E 18 NVR		7.0	11.03	45.8	A1	G
8039.105	IN-EX	OMEGA A Caravan (66_, 67_), 1.	18 NV		7.0	11.03	45.8	A1	S06
8020.100	IN-EX	OMEGA A Caravan (66_, 67_), 1.	18 NV		7.0	11.03	45.8	A1	G
8020.100	IN-EX	OMEGA A Caravan (66_, 67_), 1.	18 SV		7.0	11.03	45.8	A1	G
8039.105	IN-EX	OMEGA A Caravan (66_, 67_), 1.	18 SV		7.0	11.03	45.8	A1	S06
8039.105	IN-EX	OMEGA A Caravan (66_, 67_), 2.	20 SE		7.0	11.03	45.8	A1	S06
8020.100	IN-EX	OMEGA A Caravan (66_, 67_), 2.	20 SE		7.0	11.03	45.8	A1	G
8039.105	IN-EX	OMEGA A Caravan (66_, 67_), 2.	C 20 NEF		7.0	11.03	45.8	A1	S06
8020.100	IN-EX	OMEGA A Caravan (66_, 67_), 2.	C 20 NEF		7.0	11.03	45.8	A1	G
8039.105	IN-EX	OMEGA A Caravan (66_, 67_), 2.	C 20 NE		7.0	11.03	45.8	A1	S06
8020.100	IN-EX	OMEGA A Caravan (66_, 67_), 2.	C 20 NE		7.0	11.03	45.8	A1	G
8039.105	IN-EX	OMEGA A Caravan (66_, 67_), 2.	C 20 NEJ		7.0	11.03	45.8	A1	S06
8020.100	IN-EX	OMEGA A Caravan (66_, 67_), 2.	C 20 NEJ		7.0	11.03	45.8	A1	G
8029.600	IN-EX	OMEGA B (25_, 26_, 27_), 2.0	20 SE		6.0	11.07	40.5	F	B
8027.600	IN-EX	OMEGA B (25_, 26_, 27_), 2.0	20 SE		6.0	10.03	45.0	F	G1
8027.600	IN-EX	OMEGA B (25_, 26_, 27_), 2.0	X 20 SE		6.0	10.03	45.0	F	G1
8029.600	IN-EX	OMEGA B (25_, 26_, 27_), 2.0	X 20 SE		6.0	11.07	40.5	F	B
8027.600	IN-EX	OMEGA B (25_, 26_, 27_), 2.0 16	X 20 XEV		6.0	10.03	45.0	F	G1
8029.600	IN-EX	OMEGA B (25_, 26_, 27_), 2.0 16	X 20 XEV		6.0	11.07	40.5	F	B
8137.605	IN-EX	OMEGA B (25_, 26_, 27_), 2.0 DT	X 20 DTH	4500633	6.0	10.03	45.0	F	S06
8137.605	IN-EX	OMEGA B (25_, 26_, 27_), 2.0 DT	X 20 DTH	4770269	6.0	10.03	45.0	F	S06
8137.605	IN-EX	OMEGA B (25_, 26_, 27_), 2.0 DT	X 20 DTH	642063	6.0	10.03	45.0	F	S06
8137.605	IN-EX	OMEGA B (25_, 26_, 27_), 2.0 DT	X 20 DTH	9106309	6.0	10.03	45.0	F	S06
8137.605	IN-EX	OMEGA B (25_, 26_, 27_), 2.2 DT	Y 22 DTH	4500633	6.0	10.03	45.0	F	S06
8137.605	IN-EX	OMEGA B (25_, 26_, 27_), 2.2 DT	Y 22 DTH	4770269	6.0	10.03	45.0	F	S06
8137.605	IN-EX	OMEGA B (25_, 26_, 27_), 2.2 DT	Y 22 DTH	642063	6.0	10.03	45.0	F	S06
8137.605	IN-EX	OMEGA B (25_, 26_, 27_), 2.2 DT	Y 22 DTH	9106309	6.0	10.03	45.0	F	S06
8027.600	IN-EX	OMEGA B (25_, 26_, 27_), 2.5 V6	X 25 XE		6.0	10.03	45.0	F	G1
8027.600	IN-EX	OMEGA B (25_, 26_, 27_), 2.6 V6	Y 26 SE		6.0	10.03	45.0	F	G1
8027.600	IN-EX	OMEGA B (25_, 26_, 27_), 3.0 V6	X 30 XE		6.0	10.03	45.0	F	G1

(D1) Internal diameter, (D2) External diameter, (B) Shape, (C) Material

VALVE GUIDES

OPEL

IVT Ref.	Type	Model	Engine	OEM Ref.	D1	D2	Length	B	C
8029.600	IN-EX	OMEGA B Caravan (21_, 22_, 23	X 20 SE		6.0	11.07	40.5	F	B
8027.600	IN-EX	OMEGA B Caravan (21_, 22_, 23	X 20 SE		6.0	10.03	45.0	F	G1
8027.600	IN-EX	OMEGA B Caravan (21_, 22_, 23	X 20 XEV		6.0	10.03	45.0	F	G1
8029.600	IN-EX	OMEGA B Caravan (21_, 22_, 23	X 20 XEV		6.0	11.07	40.5	F	B
8137.605	IN-EX	OMEGA B Caravan (21_, 22_, 23	X 20 DTH	4500633	6.0	10.03	45.0	F	S06
8137.605	IN-EX	OMEGA B Caravan (21_, 22_, 23	X 20 DTH	4770269	6.0	10.03	45.0	F	S06
8137.605	IN-EX	OMEGA B Caravan (21_, 22_, 23	X 20 DTH	642063	6.0	10.03	45.0	F	S06
8137.605	IN-EX	OMEGA B Caravan (21_, 22_, 23	X 20 DTH	9106309	6.0	10.03	45.0	F	S06
8137.605	IN-EX	OMEGA B Caravan (21_, 22_, 23	Y 22 DTH	4500633	6.0	10.03	45.0	F	S06
8137.605	IN-EX	OMEGA B Caravan (21_, 22_, 23	Y 22 DTH	4770269	6.0	10.03	45.0	F	S06
8137.605	IN-EX	OMEGA B Caravan (21_, 22_, 23	Y 22 DTH	642063	6.0	10.03	45.0	F	S06
8137.605	IN-EX	OMEGA B Caravan (21_, 22_, 23	Y 22 DTH	9106309	6.0	10.03	45.0	F	S06
8027.600	IN-EX	OMEGA B Caravan (21_, 22_, 23	X 25 XE		6.0	10.03	45.0	F	G1
8027.600	IN-EX	OMEGA B Caravan (21_, 22_, 23	Y 26 SE		6.0	10.03	45.0	F	G1
8027.600	IN-EX	OMEGA B Caravan (21_, 22_, 23	X 30 XE		6.0	10.03	45.0	F	G1
8040.605	IN-EX	SIGNUM, 1.8	Z 18 XE	9158589	5.0	10.03	39.0	F	S06
8137.605	IN-EX	SIGNUM, 2.0 DTI	Y 20 DTH	4500633	6.0	10.03	45.0	F	S06
8137.605	IN-EX	SIGNUM, 2.0 DTI	Y 20 DTH	4770269	6.0	10.03	45.0	F	S06
8137.605	IN-EX	SIGNUM, 2.0 DTI	Y 20 DTH	642063	6.0	10.03	45.0	F	S06
8137.605	IN-EX	SIGNUM, 2.0 DTI	Y 20 DTH	9106309	6.0	10.03	45.0	F	S06
8130.104	IN-EX	SIGNUM, 2.0 Turbo	Z 20 NET	9006082	6.0	10.03	36.0	A	S03
8130.104	IN-EX	SIGNUM, 2.0 Turbo	Z 20 NET	90537248	6.0	10.03	36.0	A	S03
8137.605	IN-EX	SIGNUM, 2.2 DTI	Y 22 DTR	4500633	6.0	10.03	45.0	F	S06
8137.605	IN-EX	SIGNUM, 2.2 DTI	Y 22 DTR	4770269	6.0	10.03	45.0	F	S06
8137.605	IN-EX	SIGNUM, 2.2 DTI	Y 22 DTR	642063	6.0	10.03	45.0	F	S06
8137.605	IN-EX	SIGNUM, 2.2 DTI	Y 22 DTR	9106309	6.0	10.03	45.0	F	S06
8137.605	IN-EX	SIGNUM, 2.2 DTI 16V	Y 22 DTR	4500633	6.0	10.03	45.0	F	S06
8137.605	IN-EX	SIGNUM, 2.2 DTI 16V	Y 22 DTR	4770269	6.0	10.03	45.0	F	S06
8137.605	IN-EX	SIGNUM, 2.2 DTI 16V	Y 22 DTR	642063	6.0	10.03	45.0	F	S06
8137.605	IN-EX	SIGNUM, 2.2 DTI 16V	Y 22 DTR	9106309	6.0	10.03	45.0	F	S06
8137.605	IN-EX	SINTRA, 2.2 DTI	X 22 DTH	4500633	6.0	10.03	45.0	F	S06
8137.605	IN-EX	SINTRA, 2.2 DTI	X 22 DTH	4770269	6.0	10.03	45.0	F	S06
8137.605	IN-EX	SINTRA, 2.2 DTI	X 22 DTH	642063	6.0	10.03	45.0	F	S06
8137.605	IN-EX	SINTRA, 2.2 DTI	X 22 DTH	9106309	6.0	10.03	45.0	F	S06
8027.600	IN-EX	SINTRA, 2.2 i 16V	X 22 XE		6.0	10.03	45.0	F	G1
8027.600	IN-EX	SINTRA, 3.0 i 24V	X 30 XE		6.0	10.03	45.0	F	G1
8029.600	IN-EX	SPEEDSTER, 2.0 Turbo	Z 20 LET		6.0	11.07	40.5	F	B
8027.600	IN-EX	SPEEDSTER, 2.0 Turbo	Z 20 LET		6.0	10.03	45.0	F	G1
8130.104	IN-EX	SPEEDSTER, 2.2	Z 22 SE	9006082	6.0	10.03	36.0	A	S03
8130.104	IN-EX	SPEEDSTER, 2.2	Z 22 SE	90537248	6.0	10.03	36.0	A	S03
8027.600	IN-EX	TIGRA (95_), 1.4 16V	X 14 XE		6.0	10.03	45.0	F	G1
8027.600	IN-EX	TIGRA (95_), 1.6 16V	X 16 XE		6.0	10.03	45.0	F	G1
8040.605	IN-EX	TIGRA TwinTop, 1.4	Z 14 XEP	9158589	5.0	10.03	39.0	F	S06
8040.605	IN-EX	TIGRA TwinTop, 1.8	Z 18 XE	9158589	5.0	10.03	39.0	F	S06
8020.100	IN-EX	VECTRA A (86_, 87_), 1.4 S	14 NV		7.0	11.03	45.8	A1	G
8039.105	IN-EX	VECTRA A (86_, 87_), 1.4 S	14 NV		7.0	11.03	45.8	A1	S06
8039.105	IN-EX	VECTRA A (86_, 87_), 1.6	16 SV		7.0	11.03	45.8	A1	S06
8020.100	IN-EX	VECTRA A (86_, 87_), 1.6	16 SV		7.0	11.03	45.8	A1	G
8020.100	IN-EX	VECTRA A (86_, 87_), 1.6	C 16 LZ2		7.0	11.03	45.8	A1	G
8039.105	IN-EX	VECTRA A (86_, 87_), 1.6	C 16 LZ2		7.0	11.03	45.8	A1	S06
8020.100	IN-EX	VECTRA A (86_, 87_), 1.6 i	C 16 LZ2/16 LZ2		7.0	11.03	45.8	A1	G
8039.105	IN-EX	VECTRA A (86_, 87_), 1.6 i	C 16 LZ2/16 LZ2		7.0	11.03	45.8	A1	S06
8020.100	IN-EX	VECTRA A (86_, 87_), 1.6 i	C 16 NZ2/C 16 NZ/E 16 NZ		7.0	11.03	45.8	A1	G
8039.105	IN-EX	VECTRA A (86_, 87_), 1.6 i	C 16 NZ2/C 16 NZ/E 16 NZ		7.0	11.03	45.8	A1	S06
8020.100	IN-EX	VECTRA A (86_, 87_), 1.6 i	X 16 SZ		7.0	11.03	45.8	A1	G
8039.105	IN-EX	VECTRA A (86_, 87_), 1.6 i	X 16 SZ		7.0	11.03	45.8	A1	S06
8176.100	IN-EX	VECTRA A (86_, 87_), 1.7 D	17 D	0642008	8.0	12.05	50.0	A-1	G
8176.100	IN-EX	VECTRA A (86_, 87_), 1.7 D	17 DR	0642008	8.0	12.05	50.0	A-1	G
8020.100	IN-EX	VECTRA A (86_, 87_), 1.8 i KAT	C 18 NZ		7.0	11.03	45.8	A1	G
8039.105	IN-EX	VECTRA A (86_, 87_), 1.8 i KAT	C 18 NZ		7.0	11.03	45.8	A1	S06
8020.100	IN-EX	VECTRA A (86_, 87_), 1.8 S	18 SV		7.0	11.03	45.8	A1	G
8039.105	IN-EX	VECTRA A (86_, 87_), 1.8 S	18 SV		7.0	11.03	45.8	A1	S06

(D1) Internal diameter, (D2) External diameter, (B) Shape, (C) Material

VALVE GUIDES

IVT Ref.	Type	Model	Engine	OEM Ref.	D1	D2	Length	B	C
OPEL									
8039.105	IN-EX	VECTRA A (86_, 87_), 1.8 S	E 18 NVR		7.0	11.03	45.8	A1	S06
8020.100	IN-EX	VECTRA A (86_, 87_), 1.8 S	E 18 NVR		7.0	11.03	45.8	A1	G
8039.105	IN-EX	VECTRA A (86_, 87_), 1.8 S 4x4	E 18 NVR		7.0	11.03	45.8	A1	S06
8020.100	IN-EX	VECTRA A (86_, 87_), 1.8 S 4x4	E 18 NVR		7.0	11.03	45.8	A1	G
8039.105	IN-EX	VECTRA A (86_, 87_), 2.0	C 20 NEF		7.0	11.03	45.8	A1	S06
8020.100	IN-EX	VECTRA A (86_, 87_), 2.0	C 20 NEF		7.0	11.03	45.8	A1	G
8039.105	IN-EX	VECTRA A (86_, 87_), 2.0 i	20 NE		7.0	11.03	45.8	A1	S06
8020.100	IN-EX	VECTRA A (86_, 87_), 2.0 i	20 NE		7.0	11.03	45.8	A1	G
8039.105	IN-EX	VECTRA A (86_, 87_), 2.0 i	20 SEH		7.0	11.03	45.8	A1	S06
8020.100	IN-EX	VECTRA A (86_, 87_), 2.0 i	20 SEH		7.0	11.03	45.8	A1	G
8029.600	IN-EX	VECTRA A (86_, 87_), 2.0 i 16V	X 20 XEV		6.0	11.07	40.5	F	B
8027.600	IN-EX	VECTRA A (86_, 87_), 2.0 i 16V	X 20 XEV		6.0	10.03	45.0	F	G1
8029.600	IN-EX	VECTRA A (86_, 87_), 2.0 i 16V 4	X 20 XEV		6.0	11.07	40.5	F	B
8027.600	IN-EX	VECTRA A (86_, 87_), 2.0 i 16V 4	X 20 XEV		6.0	10.03	45.0	F	G1
8039.105	IN-EX	VECTRA A (86_, 87_), 2.0 i 4x4	20 NE		7.0	11.03	45.8	A1	S06
8020.100	IN-EX	VECTRA A (86_, 87_), 2.0 i 4x4	20 NE		7.0	11.03	45.8	A1	G
8039.105	IN-EX	VECTRA A (86_, 87_), 2.0 i 4x4	20 SEH		7.0	11.03	45.8	A1	S06
8020.100	IN-EX	VECTRA A (86_, 87_), 2.0 i 4x4	20 SEH		7.0	11.03	45.8	A1	G
8020.100	IN-EX	VECTRA A (86_, 87_), 2.0 i 4x4 K	C 20 NE		7.0	11.03	45.8	A1	G
8039.105	IN-EX	VECTRA A (86_, 87_), 2.0 i 4x4 K	C 20 NE		7.0	11.03	45.8	A1	S06
8039.105	IN-EX	VECTRA A (86_, 87_), 2.0 i KAT	C 20 NE		7.0	11.03	45.8	A1	S06
8020.100	IN-EX	VECTRA A (86_, 87_), 2.0 i KAT	C 20 NE		7.0	11.03	45.8	A1	G
8027.600	IN-EX	VECTRA A (86_, 87_), 2.5 V6	C 25 XE		6.0	10.03	45.0	F	G1
8020.100	IN-EX	VECTRA A CC (88_, 89_), 1.4 S	14 NV		7.0	11.03	45.8	A1	G
8039.105	IN-EX	VECTRA A CC (88_, 89_), 1.4 S	14 NV		7.0	11.03	45.8	A1	S06
8039.105	IN-EX	VECTRA A CC (88_, 89_), 1.6 i	16 LZ2		7.0	11.03	45.8	A1	S06
8020.100	IN-EX	VECTRA A CC (88_, 89_), 1.6 i	16 LZ2		7.0	11.03	45.8	A1	G
8020.100	IN-EX	VECTRA A CC (88_, 89_), 1.6 i	X 16 SZ		7.0	11.03	45.8	A1	G
8039.105	IN-EX	VECTRA A CC (88_, 89_), 1.6 i	X 16 SZ		7.0	11.03	45.8	A1	S06
8020.100	IN-EX	VECTRA A CC (88_, 89_), 1.6 i K	C 16 NZ2/C 16 NZ		7.0	11.03	45.8	A1	G
8039.105	IN-EX	VECTRA A CC (88_, 89_), 1.6 i K	C 16 NZ2/C 16 NZ		7.0	11.03	45.8	A1	S06
8039.105	IN-EX	VECTRA A CC (88_, 89_), 1.6 S	16 SV		7.0	11.03	45.8	A1	S06
8020.100	IN-EX	VECTRA A CC (88_, 89_), 1.6 S	16 SV		7.0	11.03	45.8	A1	G
8176.100	IN-EX	VECTRA A CC (88_, 89_), 1.7 D	17 D	0642008	8.0	12.05	50.0	A-1	G
8176.100	IN-EX	VECTRA A CC (88_, 89_), 1.7 D	17 DR	0642008	8.0	12.05	50.0	A-1	G
8020.100	IN-EX	VECTRA A CC (88_, 89_), 1.8 i	18 SV		7.0	11.03	45.8	A1	G
8039.105	IN-EX	VECTRA A CC (88_, 89_), 1.8 i	18 SV		7.0	11.03	45.8	A1	S06
8039.105	IN-EX	VECTRA A CC (88_, 89_), 1.8 i K	C 18 NZ		7.0	11.03	45.8	A1	S06
8020.100	IN-EX	VECTRA A CC (88_, 89_), 1.8 i K	C 18 NZ		7.0	11.03	45.8	A1	G
8020.100	IN-EX	VECTRA A CC (88_, 89_), 1.8 S	E 18 NVR		7.0	11.03	45.8	A1	G
8039.105	IN-EX	VECTRA A CC (88_, 89_), 1.8 S	E 18 NVR		7.0	11.03	45.8	A1	S06
8020.100	IN-EX	VECTRA A CC (88_, 89_), 2.0	C 20 NEF		7.0	11.03	45.8	A1	G
8039.105	IN-EX	VECTRA A CC (88_, 89_), 2.0	C 20 NEF		7.0	11.03	45.8	A1	S06
8020.100	IN-EX	VECTRA A CC (88_, 89_), 2.0 i	20 NE		7.0	11.03	45.8	A1	G
8039.105	IN-EX	VECTRA A CC (88_, 89_), 2.0 i	20 NE		7.0	11.03	45.8	A1	S06
8027.600	IN-EX	VECTRA A CC (88_, 89_), 2.0 i 16	X 20 XEV		6.0	10.03	45.0	F	G1
8029.600	IN-EX	VECTRA A CC (88_, 89_), 2.0 i 16	X 20 XEV		6.0	11.07	40.5	F	B
8039.105	IN-EX	VECTRA A CC (88_, 89_), 2.0 i G	20 SEH		7.0	11.03	45.8	A1	S06
8020.100	IN-EX	VECTRA A CC (88_, 89_), 2.0 i G	20 SEH		7.0	11.03	45.8	A1	G
8020.100	IN-EX	VECTRA A CC (88_, 89_), 2.0 i K	C 20 NE		7.0	11.03	45.8	A1	G
8039.105	IN-EX	VECTRA A CC (88_, 89_), 2.0 i K	C 20 NE		7.0	11.03	45.8	A1	S06
8027.600	IN-EX	VECTRA A CC (88_, 89_), 2.5 V6	C 25 XE		6.0	10.03	45.0	F	G1
8020.100	IN-EX	VECTRA B (36_), 1.6 i	X 16 SZR		7.0	11.03	45.8	A1	G
8039.105	IN-EX	VECTRA B (36_), 1.6 i	X 16 SZR		7.0	11.03	45.8	A1	S06
8027.600	IN-EX	VECTRA B (36_), 1.6 i 16V	Z 16 XE/X 16 XEL/Y 16 XE		6.0	10.03	45.0	F	G1
8027.600	IN-EX	VECTRA B (36_), 1.8 i 16V	X 18 XE		6.0	10.03	45.0	F	G1
8040.605	IN-EX	VECTRA B (36_), 1.8 i 16V	Z 18 XE	9158589	5.0	10.03	39.0	F	S06
8027.600	IN-EX	VECTRA B (36_), 1.8 i 16V	Z 18 XEL/X 18 XE1		6.0	10.03	45.0	F	G1
8137.605	IN-EX	VECTRA B (36_), 2.0 DI 16V	X 20 DTL	4500633	6.0	10.03	45.0	F	S06
8137.605	IN-EX	VECTRA B (36_), 2.0 DI 16V	X 20 DTL	4770269	6.0	10.03	45.0	F	S06
8137.605	IN-EX	VECTRA B (36_), 2.0 DI 16V	X 20 DTL	642063	6.0	10.03	45.0	F	S06
8137.605	IN-EX	VECTRA B (36_), 2.0 DI 16V	X 20 DTL	9106309	6.0	10.03	45.0	F	S06

(D1) Internal diameter, (D2) External diameter, (B) Shape, (C) Material

VALVE GUIDES

IVT Ref.	Type	Model	Engine	OEM Ref.	D1	D2	Length	B	C
OPEL									
8137.605	IN-EX	VECTRA B (36_), 2.0 DTI 16V	Y 20 DTH/X 20 DTH	4500633	6.0	10.03	45.0	F	S06
8137.605	IN-EX	VECTRA B (36_), 2.0 DTI 16V	Y 20 DTH/X 20 DTH	4770269	6.0	10.03	45.0	F	S06
8137.605	IN-EX	VECTRA B (36_), 2.0 DTI 16V	Y 20 DTH/X 20 DTH	642063	6.0	10.03	45.0	F	S06
8137.605	IN-EX	VECTRA B (36_), 2.0 DTI 16V	Y 20 DTH/X 20 DTH	9106309	6.0	10.03	45.0	F	S06
8137.605	IN-EX	VECTRA B (36_), 2.2 DTI 16V	Y 22 DTR	4500633	6.0	10.03	45.0	F	S06
8137.605	IN-EX	VECTRA B (36_), 2.2 DTI 16V	Y 22 DTR	4500633	6.0	10.03	45.0	F	S06
8137.605	IN-EX	VECTRA B (36_), 2.2 DTI 16V	Y 22 DTR	4770269	6.0	10.03	45.0	F	S06
8137.605	IN-EX	VECTRA B (36_), 2.2 DTI 16V	Y 22 DTR	4770269	6.0	10.03	45.0	F	S06
8137.605	IN-EX	VECTRA B (36_), 2.2 DTI 16V	Y 22 DTR	642063	6.0	10.03	45.0	F	S06
8137.605	IN-EX	VECTRA B (36_), 2.2 DTI 16V	Y 22 DTR	642063	6.0	10.03	45.0	F	S06
8137.605	IN-EX	VECTRA B (36_), 2.2 DTI 16V	Y 22 DTR	9106309	6.0	10.03	45.0	F	S06
8137.605	IN-EX	VECTRA B (36_), 2.2 DTI 16V	Y 22 DTR	9106309	6.0	10.03	45.0	F	S06
8130.104	IN-EX	VECTRA B (36_), 2.2 i 16V	Z 22 SE	9006082	6.0	10.03	36.0	A	S03
8130.104	IN-EX	VECTRA B (36_), 2.2 i 16V	Z 22 SE	90537248	6.0	10.03	36.0	A	S03
8027.600	IN-EX	VECTRA B (36_), 2.5 i V6	X 25 XE		6.0	10.03	45.0	F	G1
8027.600	IN-EX	VECTRA B (36_), 2.6 i V6	Y 26 SE		6.0	10.03	45.0	F	G1
8027.600	IN-EX	VECTRA B (36_), i 500 2.5	X 25 XE		6.0	10.03	45.0	F	G1
8039.105	IN-EX	VECTRA B Caravan (31_), 1.6 i	X 16 SZR		7.0	11.03	45.8	A1	S06
8020.100	IN-EX	VECTRA B Caravan (31_), 1.6 i	X 16 SZR		7.0	11.03	45.8	A1	G
8027.600	IN-EX	VECTRA B Caravan (31_), 1.6 i 1	Z 16 XE/X 16 XEL/Y 16 XE		6.0	10.03	45.0	F	G1
8027.600	IN-EX	VECTRA B Caravan (31_), 1.8 i 1	X 18 XE		6.0	10.03	45.0	F	G1
8040.605	IN-EX	VECTRA B Caravan (31_), 1.8 i 1	Z 18 XE	9158589	5.0	10.03	39.0	F	S06
8027.600	IN-EX	VECTRA B Caravan (31_), 1.8 i 1	Z 18 XEL/X 18 XE1		6.0	10.03	45.0	F	G1
8137.605	IN-EX	VECTRA B Caravan (31_), 2.0 DI	X 20 DTL	4500633	6.0	10.03	45.0	F	S06
8137.605	IN-EX	VECTRA B Caravan (31_), 2.0 DI	X 20 DTL	4770269	6.0	10.03	45.0	F	S06
8137.605	IN-EX	VECTRA B Caravan (31_), 2.0 DI	X 20 DTL	642063	6.0	10.03	45.0	F	S06
8137.605	IN-EX	VECTRA B Caravan (31_), 2.0 DI	X 20 DTL	9106309	6.0	10.03	45.0	F	S06
8137.605	IN-EX	VECTRA B Caravan (31_), 2.0 DT	Y 20 DTH/X 20 DTH	4500633	6.0	10.03	45.0	F	S06
8137.605	IN-EX	VECTRA B Caravan (31_), 2.0 DT	Y 20 DTH/X 20 DTH	4770269	6.0	10.03	45.0	F	S06
8137.605	IN-EX	VECTRA B Caravan (31_), 2.0 DT	Y 20 DTH/X 20 DTH	642063	6.0	10.03	45.0	F	S06
8137.605	IN-EX	VECTRA B Caravan (31_), 2.0 DT	Y 20 DTH/X 20 DTH	9106309	6.0	10.03	45.0	F	S06
8029.600	IN-EX	VECTRA B Caravan (31_), 2.0 i 1	X 20 XEV/C 20 SEL		6.0	11.07	40.5	F	B
8027.600	IN-EX	VECTRA B Caravan (31_), 2.0 i 1	X 20 XEV/C 20 SEL		6.0	10.03	45.0	F	G1
8137.605	IN-EX	VECTRA B Caravan (31_), 2.2 DT	Y 22 DTR	4500633	6.0	10.03	45.0	F	S06
8137.605	IN-EX	VECTRA B Caravan (31_), 2.2 DT	Y 22 DTR	4500633	6.0	10.03	45.0	F	S06
8137.605	IN-EX	VECTRA B Caravan (31_), 2.2 DT	Y 22 DTR	4770269	6.0	10.03	45.0	F	S06
8137.605	IN-EX	VECTRA B Caravan (31_), 2.2 DT	Y 22 DTR	4770269	6.0	10.03	45.0	F	S06
8137.605	IN-EX	VECTRA B Caravan (31_), 2.2 DT	Y 22 DTR	642063	6.0	10.03	45.0	F	S06
8137.605	IN-EX	VECTRA B Caravan (31_), 2.2 DT	Y 22 DTR	642063	6.0	10.03	45.0	F	S06
8137.605	IN-EX	VECTRA B Caravan (31_), 2.2 DT	Y 22 DTR	9106309	6.0	10.03	45.0	F	S06
8137.605	IN-EX	VECTRA B Caravan (31_), 2.2 DT	Y 22 DTR	9106309	6.0	10.03	45.0	F	S06
8130.104	IN-EX	VECTRA B Caravan (31_), 2.2 i 1	Z 22 SE	9006082	6.0	10.03	36.0	A	S03
8130.104	IN-EX	VECTRA B Caravan (31_), 2.2 i 1	Z 22 SE	90537248	6.0	10.03	36.0	A	S03
8027.600	IN-EX	VECTRA B Caravan (31_), 2.5 i V	X 25 XE		6.0	10.03	45.0	F	G1
8027.600	IN-EX	VECTRA B Caravan (31_), 2.6 i V	Y 26 SE		6.0	10.03	45.0	F	G1
8027.600	IN-EX	VECTRA B Caravan (31_), i 500 2	X 25 XE		6.0	10.03	45.0	F	G1
8039.105	IN-EX	VECTRA B CC (38_), 1.6 i	X 16 SZR		7.0	11.03	45.8	A1	S06
8020.100	IN-EX	VECTRA B CC (38_), 1.6 i	X 16 SZR		7.0	11.03	45.8	A1	G
8027.600	IN-EX	VECTRA B CC (38_), 1.6 i 16V	Z 16 XE/X 16 XEL/Y 16 XE		6.0	10.03	45.0	F	G1
8027.600	IN-EX	VECTRA B CC (38_), 1.8 i 16V	X 18 XE		6.0	10.03	45.0	F	G1
8040.605	IN-EX	VECTRA B CC (38_), 1.8 i 16V	Z 18 XE	9158589	5.0	10.03	39.0	F	S06
8027.600	IN-EX	VECTRA B CC (38_), 1.8 i 16V	Z 18 XEL/X 18 XE1		6.0	10.03	45.0	F	G1
8137.605	IN-EX	VECTRA B CC (38_), 2.0 DI 16V	X 20 DTL	4500633	6.0	10.03	45.0	F	S06
8137.605	IN-EX	VECTRA B CC (38_), 2.0 DI 16V	X 20 DTL	4770269	6.0	10.03	45.0	F	S06
8137.605	IN-EX	VECTRA B CC (38_), 2.0 DI 16V	X 20 DTL	642063	6.0	10.03	45.0	F	S06
8137.605	IN-EX	VECTRA B CC (38_), 2.0 DI 16V	X 20 DTL	9106309	6.0	10.03	45.0	F	S06
8137.605	IN-EX	VECTRA B CC (38_), 2.0 DTI 16V	Y 20 DTH/X 20 DTH	4500633	6.0	10.03	45.0	F	S06
8137.605	IN-EX	VECTRA B CC (38_), 2.0 DTI 16V	Y 20 DTH/X 20 DTH	4770269	6.0	10.03	45.0	F	S06
8137.605	IN-EX	VECTRA B CC (38_), 2.0 DTI 16V	Y 20 DTH/X 20 DTH	642063	6.0	10.03	45.0	F	S06
8137.605	IN-EX	VECTRA B CC (38_), 2.0 DTI 16V	Y 20 DTH/X 20 DTH	9106309	6.0	10.03	45.0	F	S06
8027.600	IN-EX	VECTRA B CC (38_), 2.0 i 16V	X 20 XEV/C 20 SEL		6.0	10.03	45.0	F	G1
8029.600	IN-EX	VECTRA B CC (38_), 2.0 i 16V	X 20 XEV/C 20 SEL		6.0	11.07	40.5	F	B

(D1) Internal diameter, (D2) External diameter, (B) Shape, (C) Material

VALVE GUIDES

IVT Ref.	Type	Model	Engine	OEM Ref.	D1	D2	Length	B	C
OPEL									
8137.605	IN-EX	VECTRA B CC (38_), 2.2 DTI 16V	Y 22 DTR	4500633	6.0	10.03	45.0	F	S06
8137.605	IN-EX	VECTRA B CC (38_), 2.2 DTI 16V	Y 22 DTR	4500633	6.0	10.03	45.0	F	S06
8137.605	IN-EX	VECTRA B CC (38_), 2.2 DTI 16V	Y 22 DTR	4770269	6.0	10.03	45.0	F	S06
8137.605	IN-EX	VECTRA B CC (38_), 2.2 DTI 16V	Y 22 DTR	4770269	6.0	10.03	45.0	F	S06
8137.605	IN-EX	VECTRA B CC (38_), 2.2 DTI 16V	Y 22 DTR	642063	6.0	10.03	45.0	F	S06
8137.605	IN-EX	VECTRA B CC (38_), 2.2 DTI 16V	Y 22 DTR	642063	6.0	10.03	45.0	F	S06
8137.605	IN-EX	VECTRA B CC (38_), 2.2 DTI 16V	Y 22 DTR	9106309	6.0	10.03	45.0	F	S06
8137.605	IN-EX	VECTRA B CC (38_), 2.2 DTI 16V	Y 22 DTR	9106309	6.0	10.03	45.0	F	S06
8130.104	IN-EX	VECTRA B CC (38_), 2.2 i 16V	Z 22 SE	9006082	6.0	10.03	36.0	A	S03
8130.104	IN-EX	VECTRA B CC (38_), 2.2 i 16V	Z 22 SE	90537248	6.0	10.03	36.0	A	S03
8027.600	IN-EX	VECTRA B CC (38_), 2.5 i V6	X 25 XE		6.0	10.03	45.0	F	G1
8027.600	IN-EX	VECTRA B CC (38_), 2.6 i V6	Y 26 SE		6.0	10.03	45.0	F	G1
8027.600	IN-EX	VECTRA C Caravan, 1.6 16V	Z 16 XE		6.0	10.03	45.0	F	G1
8040.605	IN-EX	VECTRA C Caravan, 1.8	Z 18 XE	9158589	5.0	10.03	39.0	F	S06
8137.605	IN-EX	VECTRA C Caravan, 2.0 DTI	Y 20 DTH	4500633	6.0	10.03	45.0	F	S06
8137.605	IN-EX	VECTRA C Caravan, 2.0 DTI	Y 20 DTH	4770269	6.0	10.03	45.0	F	S06
8137.605	IN-EX	VECTRA C Caravan, 2.0 DTI	Y 20 DTH	642063	6.0	10.03	45.0	F	S06
8137.605	IN-EX	VECTRA C Caravan, 2.0 DTI	Y 20 DTH	9106309	6.0	10.03	45.0	F	S06
8130.104	IN-EX	VECTRA C Caravan, 2.0 Turbo	Z 20 NET	9006082	6.0	10.03	36.0	A	S03
8130.104	IN-EX	VECTRA C Caravan, 2.0 Turbo	Z 20 NET	90537248	6.0	10.03	36.0	A	S03
8137.605	IN-EX	VECTRA C Caravan, 2.2 DTI	Y 22 DTR	4500633	6.0	10.03	45.0	F	S06
8137.605	IN-EX	VECTRA C Caravan, 2.2 DTI	Y 22 DTR	4500633	6.0	10.03	45.0	F	S06
8137.605	IN-EX	VECTRA C Caravan, 2.2 DTI	Y 22 DTR	4770269	6.0	10.03	45.0	F	S06
8137.605	IN-EX	VECTRA C Caravan, 2.2 DTI	Y 22 DTR	4770269	6.0	10.03	45.0	F	S06
8137.605	IN-EX	VECTRA C Caravan, 2.2 DTI	Y 22 DTR	642063	6.0	10.03	45.0	F	S06
8137.605	IN-EX	VECTRA C Caravan, 2.2 DTI	Y 22 DTR	642063	6.0	10.03	45.0	F	S06
8137.605	IN-EX	VECTRA C Caravan, 2.2 DTI	Y 22 DTR	9106309	6.0	10.03	45.0	F	S06
8137.605	IN-EX	VECTRA C Caravan, 2.2 DTI	Y 22 DTR	9106309	6.0	10.03	45.0	F	S06
8027.600	IN-EX	VECTRA C GTS, 1.6	Z 16 XE		6.0	10.03	45.0	F	G1
8040.605	IN-EX	VECTRA C GTS, 1.8 16V	Z 18 XE	9158589	5.0	10.03	39.0	F	S06
8040.605	IN-EX	VECTRA C GTS, 1.8 16V	Z 18 XEL	9158589	5.0	10.03	39.0	F	S06
8130.104	IN-EX	VECTRA C GTS, 2.0 16V Turbo	Z 20 NET	9006082	6.0	10.03	36.0	A	S03
8130.104	IN-EX	VECTRA C GTS, 2.0 16V Turbo	Z 20 NET	90537248	6.0	10.03	36.0	A	S03
8137.605	IN-EX	VECTRA C GTS, 2.0 DTI 16V	Y 20 DTH	4500633	6.0	10.03	45.0	F	S06
8137.605	IN-EX	VECTRA C GTS, 2.0 DTI 16V	Y 20 DTH	4770269	6.0	10.03	45.0	F	S06
8137.605	IN-EX	VECTRA C GTS, 2.0 DTI 16V	Y 20 DTH	642063	6.0	10.03	45.0	F	S06
8137.605	IN-EX	VECTRA C GTS, 2.0 DTI 16V	Y 20 DTH	9106309	6.0	10.03	45.0	F	S06
8130.104	IN-EX	VECTRA C GTS, 2.2 16V	Z 22 SE	9006082	6.0	10.03	36.0	A	S03
8130.104	IN-EX	VECTRA C GTS, 2.2 16V	Z 22 SE	90537248	6.0	10.03	36.0	A	S03
8137.605	IN-EX	VECTRA C GTS, 2.2 DTI 16V	Y 22 DTR	4500633	6.0	10.03	45.0	F	S06
8137.605	IN-EX	VECTRA C GTS, 2.2 DTI 16V	Y 22 DTR	4500633	6.0	10.03	45.0	F	S06
8137.605	IN-EX	VECTRA C GTS, 2.2 DTI 16V	Y 22 DTR	4770269	6.0	10.03	45.0	F	S06
8137.605	IN-EX	VECTRA C GTS, 2.2 DTI 16V	Y 22 DTR	4770269	6.0	10.03	45.0	F	S06
8137.605	IN-EX	VECTRA C GTS, 2.2 DTI 16V	Y 22 DTR	642063	6.0	10.03	45.0	F	S06
8137.605	IN-EX	VECTRA C GTS, 2.2 DTI 16V	Y 22 DTR	642063	6.0	10.03	45.0	F	S06
8137.605	IN-EX	VECTRA C GTS, 2.2 DTI 16V	Y 22 DTR	9106309	6.0	10.03	45.0	F	S06
8137.605	IN-EX	VECTRA C GTS, 2.2 DTI 16V	Y 22 DTR	9106309	6.0	10.03	45.0	F	S06
8027.600	IN-EX	VECTRA C, 1.6 16V	Z 16 XE		6.0	10.03	45.0	F	G1
8040.605	IN-EX	VECTRA C, 1.8	Z 18 XEL	9158589	5.0	10.03	39.0	F	S06
8040.605	IN-EX	VECTRA C, 1.8 16V	Z 18 XE	9158589	5.0	10.03	39.0	F	S06
8130.104	IN-EX	VECTRA C, 2.0 16V Turbo	Z 20 NET	9006082	6.0	10.03	36.0	A	S03
8130.104	IN-EX	VECTRA C, 2.0 16V Turbo	Z 20 NET	90537248	6.0	10.03	36.0	A	S03
8137.605	IN-EX	VECTRA C, 2.0 DTI 16V	Y 20 DTH	4500633	6.0	10.03	45.0	F	S06
8137.605	IN-EX	VECTRA C, 2.0 DTI 16V	Y 20 DTH	4770269	6.0	10.03	45.0	F	S06
8137.605	IN-EX	VECTRA C, 2.0 DTI 16V	Y 20 DTH	642063	6.0	10.03	45.0	F	S06
8137.605	IN-EX	VECTRA C, 2.0 DTI 16V	Y 20 DTH	9106309	6.0	10.03	45.0	F	S06
8130.104	IN-EX	VECTRA C, 2.2 16V	Z 22 SE	9006082	6.0	10.03	36.0	A	S03
8130.104	IN-EX	VECTRA C, 2.2 16V	Z 22 SE	90537248	6.0	10.03	36.0	A	S03
8137.605	IN-EX	VECTRA C, 2.2 DTI 16V	Y 22 DTR	4500633	6.0	10.03	45.0	F	S06
8137.605	IN-EX	VECTRA C, 2.2 DTI 16V	Y 22 DTR	4500633	6.0	10.03	45.0	F	S06
8137.605	IN-EX	VECTRA C, 2.2 DTI 16V	Y 22 DTR	4770269	6.0	10.03	45.0	F	S06
8137.605	IN-EX	VECTRA C, 2.2 DTI 16V	Y 22 DTR	4770269	6.0	10.03	45.0	F	S06

(D1) Internal diameter, (D2) External diameter, (B) Shape, (C) Material

VALVE GUIDES

IVT Ref.	Type	Model	Engine	OEM Ref.	D1	D2	Length	B	C
OPEL									
8137.605	IN-EX	VECTRA C, 2.2 DTI 16V	Y 22 DTR	642063	6.0	10.03	45.0	F	S06
8137.605	IN-EX	VECTRA C, 2.2 DTI 16V	Y 22 DTR	642063	6.0	10.03	45.0	F	S06
8137.605	IN-EX	VECTRA C, 2.2 DTI 16V	Y 22 DTR	9106309	6.0	10.03	45.0	F	S06
8137.605	IN-EX	VECTRA C, 2.2 DTI 16V	Y 22 DTR	9106309	6.0	10.03	45.0	F	S06
8069.601	IN-EX	Vivaro 1.9 DTI	F9Q 760	7700859086	7.0	12.06	38.3	F-1	B
8069.601	IN-EX	Vivaro 1.9 DTI	F9Q 760	7700859086	7.0	12.06	38.3	F-1	B
8069.601	IN-EX	Vivaro 1.9 DTI	F9Q 760	M889393	7.0	12.06	38.3	F-1	B
8069.601	IN-EX	Vivaro 1.9 DTI	F9Q 760	M889393	7.0	12.06	38.3	F-1	B
8157.601	IN-EX	VIVARO Combi (J7), 2.5 DTI	G9U 730	8200562080	6.0	11.07	40.5	F	B
8069.601	IN-EX	Vivaro Combi 1.9 DI	F9Q 762	7700859086	7.0	12.06	38.3	F-1	B
8069.601	IN-EX	Vivaro Combi 1.9 DI	F9Q 762	7700859086	7.0	12.06	38.3	F-1	B
8069.601	IN-EX	Vivaro Combi 1.9 DI	F9Q 762	M889393	7.0	12.06	38.3	F-1	B
8069.601	IN-EX	Vivaro Combi 1.9 DI	F9Q 762	M889393	7.0	12.06	38.3	F-1	B
8069.601	IN-EX	Vivaro Combi 1.9 DTI	F9Q 760	7700859086	7.0	12.06	38.3	F-1	B
8069.601	IN-EX	Vivaro Combi 1.9 DTI	F9Q 760	7700859086	7.0	12.06	38.3	F-1	B
8069.601	IN-EX	Vivaro Combi 1.9 DTI	F9Q 760	M889393	7.0	12.06	38.3	F-1	B
8069.601	IN-EX	Vivaro Combi 1.9 DTI	F9Q 760	M889393	7.0	12.06	38.3	F-1	B
8083.101	IN-EX	Vivaro Combi 2.0 16V	F4R 720	7700109151	5.5	11.07	40.6	A	B
8083.101	IN-EX	Vivaro Combi 2.0 Ecotec	F4R 820	7700109151	5.5	11.07	40.6	A	B
8069.601	IN-EX	Vivaro Furgonato 1.9 DI	F9Q 762	7700859086	7.0	12.06	38.3	F-1	B
8069.601	IN-EX	Vivaro Furgonato 1.9 DI	F9Q 762	7700859086	7.0	12.06	38.3	F-1	B
8069.601	IN-EX	Vivaro Furgonato 1.9 DI	F9Q 762	M889393	7.0	12.06	38.3	F-1	B
8069.601	IN-EX	Vivaro Furgonato 1.9 DI	F9Q 762	M889393	7.0	12.06	38.3	F-1	B
8069.601	IN-EX	Vivaro Furgonato 1.9 DTI	F9Q 760	7700859086	7.0	12.06	38.3	F-1	B
8069.601	IN-EX	Vivaro Furgonato 1.9 DTI	F9Q 760	7700859086	7.0	12.06	38.3	F-1	B
8069.601	IN-EX	Vivaro Furgonato 1.9 DTI	F9Q 760	M889393	7.0	12.06	38.3	F-1	B
8069.601	IN-EX	Vivaro Furgonato 1.9 DTI	F9Q 760	M889393	7.0	12.06	38.3	F-1	B
8083.101	IN-EX	Vivaro Furgonato 2.0 16V	F4R 720	7700109151	5.5	11.07	40.6	A	B
8083.101	IN-EX	Vivaro Furgonato 2.0 Ecotec	F4R 820	7700109151	5.5	11.07	40.6	A	B
8157.601	IN-EX	VIVARO Kasten (F7), 2.5 DTI	G9U 730	8200562080	6.0	11.07	40.5	F	B
8083.101	IN-EX	Vivaro Pianale Piatto 2.0 16V	F4R 820	7700109151	5.5	11.07	40.6	A	B
8083.101	IN-EX	Vivaro Pianale Piatto 2.0 Ecotec	F4R 820	7700109151	5.5	11.07	40.6	A	B
8157.601	IN-EX	VIVARO Pritsche/Fahrgestell (E7)	G9U 730	8200562080	6.0	11.07	40.5	F	B
8027.600	IN-EX	ZAFIRA A (F75_), 1.6 16V	Z 16 XE/X 16 XEL		6.0	10.03	45.0	F	G1
8027.600	IN-EX	ZAFIRA A (F75_), 1.8 16V	X 18 XE1		6.0	10.03	45.0	F	G1
8040.605	IN-EX	ZAFIRA A (F75_), 1.8 16V	Z 18 XE	9158589	5.0	10.03	39.0	F	S06
8137.605	IN-EX	ZAFIRA A (F75_), 2.0 DI	X 20 DTL	4500633	6.0	10.03	45.0	F	S06
8137.605	IN-EX	ZAFIRA A (F75_), 2.0 DI	X 20 DTL	4770269	6.0	10.03	45.0	F	S06
8137.605	IN-EX	ZAFIRA A (F75_), 2.0 DI	X 20 DTL	642063	6.0	10.03	45.0	F	S06
8137.605	IN-EX	ZAFIRA A (F75_), 2.0 DI	X 20 DTL	9106309	6.0	10.03	45.0	F	S06
8137.605	IN-EX	ZAFIRA A (F75_), 2.0 DI 16V	X 20 DTL	4500633	6.0	10.03	45.0	F	S06
8137.605	IN-EX	ZAFIRA A (F75_), 2.0 DI 16V	X 20 DTL	4770269	6.0	10.03	45.0	F	S06
8137.605	IN-EX	ZAFIRA A (F75_), 2.0 DI 16V	X 20 DTL	642063	6.0	10.03	45.0	F	S06
8137.605	IN-EX	ZAFIRA A (F75_), 2.0 DI 16V	X 20 DTL	9106309	6.0	10.03	45.0	F	S06
8137.605	IN-EX	ZAFIRA A (F75_), 2.0 DTI 16V	Y 20 DTH	4500633	6.0	10.03	45.0	F	S06
8137.605	IN-EX	ZAFIRA A (F75_), 2.0 DTI 16V	Y 20 DTH	4770269	6.0	10.03	45.0	F	S06
8137.605	IN-EX	ZAFIRA A (F75_), 2.0 DTI 16V	Y 20 DTH	642063	6.0	10.03	45.0	F	S06
8137.605	IN-EX	ZAFIRA A (F75_), 2.0 DTI 16V	Y 20 DTH	9106309	6.0	10.03	45.0	F	S06
8029.600	IN-EX	ZAFIRA A (F75_), 2.0 OPC	Z 20 LET		6.0	11.07	40.5	F	B
8027.600	IN-EX	ZAFIRA A (F75_), 2.0 OPC	Z 20 LET		6.0	10.03	45.0	F	G1
8029.600	IN-EX	ZAFIRA A (F75_), 2.0 OPC	Z 20 LET/Z 20 LER		6.0	11.07	40.5	F	B
8027.600	IN-EX	ZAFIRA A (F75_), 2.0 OPC	Z 20 LET/Z 20 LER		6.0	10.03	45.0	F	G1
8130.104	IN-EX	ZAFIRA A (F75_), 2.2 16V	Z 22 SE	9006082	6.0	10.03	36.0	A	S03
8130.104	IN-EX	ZAFIRA A (F75_), 2.2 16V	Z 22 SE	90537248	6.0	10.03	36.0	A	S03
8137.605	IN-EX	ZAFIRA A (F75_), 2.2 DTI 16V	Y 22 DTR	4500633	6.0	10.03	45.0	F	S06
8137.605	IN-EX	ZAFIRA A (F75_), 2.2 DTI 16V	Y 22 DTR	4500633	6.0	10.03	45.0	F	S06
8137.605	IN-EX	ZAFIRA A (F75_), 2.2 DTI 16V	Y 22 DTR	4770269	6.0	10.03	45.0	F	S06
8137.605	IN-EX	ZAFIRA A (F75_), 2.2 DTI 16V	Y 22 DTR	4770269	6.0	10.03	45.0	F	S06
8137.605	IN-EX	ZAFIRA A (F75_), 2.2 DTI 16V	Y 22 DTR	642063	6.0	10.03	45.0	F	S06
8137.605	IN-EX	ZAFIRA A (F75_), 2.2 DTI 16V	Y 22 DTR	642063	6.0	10.03	45.0	F	S06
8137.605	IN-EX	ZAFIRA A (F75_), 2.2 DTI 16V	Y 22 DTR	9106309	6.0	10.03	45.0	F	S06
8137.605	IN-EX	ZAFIRA A (F75_), 2.2 DTI 16V	Y 22 DTR	9106309	6.0	10.03	45.0	F	S06

(D1) Internal diameter, (D2) External diameter, (B) Shape, (C) Material

VALVE GUIDES

IVT Ref.	Type	Model	Engine	OEM Ref.	D1	D2	Length	B	C
OPEL									
8186.105	IN-EX	ZAFIRA B (A05), 1.9 CDTI	Z 19 DTH	641463	5.0	10.03	46.7	A	S06
8186.105	IN-EX	ZAFIRA B (A05), 1.9 CDTI	Z 19 DTH	642699	5.0	10.03	46.7	A	S06
8186.105	IN-EX	ZAFIRA B (A05), 1.9 CDTI	Z 19 DTH	642700	5.0	10.03	46.7	A	S06
8186.105	IN-EX	ZAFIRA B (A05), 1.9 CDTI	Z 19 DTH	642701	5.0	10.03	46.7	A	S06
8029.600	IN-EX	ZAFIRA B (A05), 2.0	Z 20 LEH		6.0	11.07	40.5	F	B
8027.600	IN-EX	ZAFIRA B (A05), 2.0	Z 20 LEH		6.0	10.03	45.0	F	G1
8029.600	IN-EX	ZAFIRA B (A05), 2.0	Z 20 LER		6.0	11.07	40.5	F	B
8027.600	IN-EX	ZAFIRA B (A05), 2.0	Z 20 LER		6.0	10.03	45.0	F	G1
8186.105	IN-EX	ZAFIRA TOURER C (P12), 2.0 Bi	A 20 DTR	641463	5.0	10.03	46.7	A	S06
8186.105	IN-EX	ZAFIRA TOURER C (P12), 2.0 Bi	A 20 DTR	642699	5.0	10.03	46.7	A	S06
8186.105	IN-EX	ZAFIRA TOURER C (P12), 2.0 Bi	A 20 DTR	642700	5.0	10.03	46.7	A	S06
8186.105	IN-EX	ZAFIRA TOURER C (P12), 2.0 Bi	A 20 DTR	642701	5.0	10.03	46.7	A	S06
8186.105	IN-EX	ZAFIRA TOURER C (P12), 2.0 C	A 20 DT/Z 20 DTJ/Y 20 DTJ	641463	5.0	10.03	46.7	A	S06
8186.105	IN-EX	ZAFIRA TOURER C (P12), 2.0 C	A 20 DT/Z 20 DTJ/Y 20 DTJ	642699	5.0	10.03	46.7	A	S06
8186.105	IN-EX	ZAFIRA TOURER C (P12), 2.0 C	A 20 DT/Z 20 DTJ/Y 20 DTJ	642700	5.0	10.03	46.7	A	S06
8186.105	IN-EX	ZAFIRA TOURER C (P12), 2.0 C	A 20 DT/Z 20 DTJ/Y 20 DTJ	642701	5.0	10.03	46.7	A	S06
8186.105	IN-EX	ZAFIRA TOURER C (P12), 2.0 C	A 20 DTH	641463	5.0	10.03	46.7	A	S06
8186.105	IN-EX	ZAFIRA TOURER C (P12), 2.0 C	A 20 DTH	641463	5.0	10.03	46.7	A	S06
8186.105	IN-EX	ZAFIRA TOURER C (P12), 2.0 C	A 20 DTH	642699	5.0	10.03	46.7	A	S06
8186.105	IN-EX	ZAFIRA TOURER C (P12), 2.0 C	A 20 DTH	642699	5.0	10.03	46.7	A	S06
8186.105	IN-EX	ZAFIRA TOURER C (P12), 2.0 C	A 20 DTH	642700	5.0	10.03	46.7	A	S06
8186.105	IN-EX	ZAFIRA TOURER C (P12), 2.0 C	A 20 DTH	642700	5.0	10.03	46.7	A	S06
8186.105	IN-EX	ZAFIRA TOURER C (P12), 2.0 C	A 20 DTH	642701	5.0	10.03	46.7	A	S06
8186.105	IN-EX	ZAFIRA TOURER C (P12), 2.0 C	A 20 DTH	642701	5.0	10.03	46.7	A	S06
8186.105	IN-EX	ZAFIRA TOURER C (P12), 2.0 C	A 20 DTL	641463	5.0	10.03	46.7	A	S06
8186.105	IN-EX	ZAFIRA TOURER C (P12), 2.0 C	A 20 DTL	642699	5.0	10.03	46.7	A	S06
8186.105	IN-EX	ZAFIRA TOURER C (P12), 2.0 C	A 20 DTL	642700	5.0	10.03	46.7	A	S06
8186.105	IN-EX	ZAFIRA TOURER C (P12), 2.0 C	A 20 DTL	642701	5.0	10.03	46.7	A	S06
PERKINS									
8164.100	IN-EX	-	-	404E6510A	8.0	12.74	62.0	A-6	G1
8164.100	IN-EX	-	-	6361520	8.0	12.74	62.0	A-6	G1
PEUGEOT									
8159.601	IN-EX	1007 (KM_), 1.4	KFV (TU3JP)	22060	7.0	13.06	47.6	F	B
8204.100	IN-EX	1007 (KM_), 1.4 HDi	8HZ (DV4TD)/8HX (DV4TD)		5.5	9.55	34.0	A	G1
8165.104	IN-EX	1007 (KM_), 1.4 HDi	8HZ (DV4TD)/8HX (DV4TD)	0220A6	5.5	9.55	34.0	A	S03
8204.100	IN-EX	1007 (KM_), 1.6 HDi	9HZ (DV6TED4)		5.5	9.55	34.0	A	G1
8165.104	IN-EX	1007 (KM_), 1.6 HDi	9HZ (DV6TED4)	0220A6	5.5	9.55	34.0	A	S03
8159.601	IN-EX	104, 1.0	108C (XV8)	22060	7.0	13.06	47.6	F	B
8159.601	IN-EX	106 I (1A, 1C), 1.0	CDZ (TU9M)	22060	7.0	13.06	47.6	F	B
8143.601	IN-EX	106 I (1A, 1C), 1.3	TU2J2	022084	7.0	13.07	48.5	F	B
8143.601	IN-EX	106 I (1A, 1C), 1.4	KFZ (TU3J2/Z)	022084	7.0	13.07	48.5	F	B
8143.601	IN-EX	106 I (1A, 1C), 1.6	NFY (TU5J2)	022084	7.0	13.07	48.5	F	B
8143.601	IN-EX	106 I (1A, 1C), 1.6	NFZ (TU5JP)	022084	7.0	13.07	48.5	F	B
8111.600	IN-EX	106 I 1.1	HDZ (TU1M)	22059	7.0	13.06	47.5	F	G
8111.600	IN-EX	106 I 1.4	KDX (TU3MC)	22059	7.0	13.06	47.5	F	G
8111.600	IN-EX	106 I 1.4	KDY (TU3M)	22059	7.0	13.06	47.5	F	G
8159.601	IN-EX	106 II (1), 1.1 i	HDZ (TU1M)/HFX (TU1JP)	22060	7.0	13.06	47.6	F	B
8159.601	IN-EX	106 II (1), 1.4 i	KFX (TU3JP)/KFW (TU3JP)	22060	7.0	13.06	47.6	F	B
8159.601	IN-EX	106 II (1), 1.6 i	NFW (TU5J2)/NFY (TU5J2)	22060	7.0	13.06	47.6	F	B
8143.601	IN-EX	106 II (1), 1.6 i	NFZ (TU5JP)	022084	7.0	13.07	48.5	F	B
8111.600	IN-EX	106 II 1.1i	HDZ (TU1M)	22059	7.0	13.06	47.5	F	G
8111.600	IN-EX	106 II 1.1i	HFX (TU1JP)	22059	7.0	13.06	47.5	F	G
8111.600	IN-EX	106 II 1.1i	KFW (TU3JP)	22059	7.0	13.06	47.5	F	G
8111.600	IN-EX	106 II 1.1i	KFX (TU3JP)	22059	7.0	13.06	47.5	F	G
8117.601	IN-EX	106 II 1.6 S16	NFX (TU5J4)	22095	6.0	11.11	40.0	F	B
8204.100	IN-EX	107, 1.4 HDi	8HT (DV4TD)		5.5	9.55	34.0	A	G1
8165.104	IN-EX	107, 1.4 HDi	8HT (DV4TD)	0220A6	5.5	9.55	34.0	A	S03
8204.100	IN-EX	2 (DY), 1.4 CD	F6JA/F6JB		5.5	9.55	34.0	A	G1
8111.600	IN-EX	205 Furgonato 1.1	H1B (TU1)	22059	7.0	13.06	47.5	F	G
8134.601	IN-EX	205 I (741A/C), 1.6	B1A (XU51C)	022072	8.0	13.07	45.0	F	B

(D1) Internal diameter, (D2) External diameter, (B) Shape, (C) Material

VALVE GUIDES

PEUGEOT

IVT Ref.	Type	Model	Engine	OEM Ref.	D1	D2	Length	B	C
8134.601	IN-EX	205 I (741A/C), 1.6	B1A (XU51C)	022077	8.0	13.07	45.0	F	B
8134.601	IN-EX	205 I (741A/C), 1.6	B1E (XU51C)	022072	8.0	13.07	45.0	F	B
8134.601	IN-EX	205 I (741A/C), 1.6	B1E (XU51C)	022077	8.0	13.07	45.0	F	B
8134.601	IN-EX	205 I (741A/C), 1.6	BAZ (XU5CP)	022072	8.0	13.07	45.0	F	B
8134.601	IN-EX	205 I (741A/C), 1.6	BAZ (XU5CP)	022077	8.0	13.07	45.0	F	B
8131.600	IN-EX	205 I (741A/C), 1.6	BAZ (XU5CP)	7701461009	8.0	13.07	45.0	F	G
8134.601	IN-EX	205 I (741A/C), 1.6 GTI	180A (XU5J)	022072	8.0	13.07	45.0	F	B
8134.601	IN-EX	205 I (741A/C), 1.6 GTI	180A (XU5J)	022077	8.0	13.07	45.0	F	B
8134.601	IN-EX	205 I (741A/C), 1.9 GTI	D6B (XU9JA)	022072	8.0	13.07	45.0	F	B
8134.601	IN-EX	205 I (741A/C), 1.9 GTI	D6B (XU9JA)	022077	8.0	13.07	45.0	F	B
8131.600	IN-EX	205 I (741A/C), 1.9 GTI	D6B (XU9JA)	7701461009	8.0	13.07	45.0	F	G
8134.601	IN-EX	205 I (741A/C), 1.9 GTI	DFZ (XU9J1)	022072	8.0	13.07	45.0	F	B
8134.601	IN-EX	205 I (741A/C), 1.9 GTI	DFZ (XU9J1)	022077	8.0	13.07	45.0	F	B
8131.600	IN-EX	205 I (741A/C), 1.9 GTI	DFZ (XU9J1)	7701461009	8.0	13.07	45.0	F	G
8111.600	IN-EX	205 I 1.4	TU3	22059	7.0	13.06	47.5	F	G
8134.601	IN-EX	205 I Cabriolet (741B, 20D), 1.6 C	BDY (XU5M3Z)	022072	8.0	13.07	45.0	F	B
8134.601	IN-EX	205 I Cabriolet (741B, 20D), 1.6 C	BDY (XU5M3Z)	022077	8.0	13.07	45.0	F	B
8131.600	IN-EX	205 I Cabriolet (741B, 20D), 1.6 C	BDY (XU5M3Z)	7701461009	8.0	13.07	45.0	F	G
8134.601	IN-EX	205 I Cabriolet (741B, 20D), 1.6 C	180A (XU5J)/180Z (XU5J)	022072	8.0	13.07	45.0	F	B
8134.601	IN-EX	205 I Cabriolet (741B, 20D), 1.6 C	180A (XU5J)/180Z (XU5J)	022077	8.0	13.07	45.0	F	B
8134.601	IN-EX	205 I Cabriolet (741B, 20D), 1.9 C	DFZ (XU9J1)	022072	8.0	13.07	45.0	F	B
8134.601	IN-EX	205 I Cabriolet (741B, 20D), 1.9 C	DFZ (XU9J1)	022072	8.0	13.07	45.0	F	B
8134.601	IN-EX	205 I Cabriolet (741B, 20D), 1.9 C	DFZ (XU9J1)	022077	8.0	13.07	45.0	F	B
8134.601	IN-EX	205 I Cabriolet (741B, 20D), 1.9 C	DFZ (XU9J1)	022077	8.0	13.07	45.0	F	B
8131.600	IN-EX	205 I Cabriolet (741B, 20D), 1.9 C	DFZ (XU9J1)	7701461009	8.0	13.07	45.0	F	G
8131.600	IN-EX	205 I Cabriolet (741B, 20D), 1.9 C	DFZ (XU9J1)	7701461009	8.0	13.07	45.0	F	G
8111.600	IN-EX	205 I Cabriolet 1.1 CJ	HDZ (TU1M)	22059	7.0	13.06	47.5	F	G
8111.600	IN-EX	205 I Cabriolet 1.4 CJ	K1D (TU3A)	22059	7.0	13.06	47.5	F	G
8111.600	IN-EX	205 I Cabriolet 1.4 CJ	KDY (TU3M)	22059	7.0	13.06	47.5	F	G
8111.600	IN-EX	205 I Cabriolet 1.4 CJ	TU3	22059	7.0	13.06	47.5	F	G
8111.600	IN-EX	205 I Cabriolet 1.4 CT	TU3	22059	7.0	13.06	47.5	F	G
8159.601	IN-EX	205 II (20A/C), 1.4	K2B (TU3S)	22060	7.0	13.06	47.6	F	B
8134.601	IN-EX	205 II (20A/C), 1.6	171 (XU5S)	022072	8.0	13.07	45.0	F	B
8134.601	IN-EX	205 II (20A/C), 1.6	171 (XU5S)	022077	8.0	13.07	45.0	F	B
8131.600	IN-EX	205 II (20A/C), 1.6	171 (XU5S)	7701461009	8.0	13.07	45.0	F	G
8134.601	IN-EX	205 II (20A/C), 1.6	B1E (XU51C)	022072	8.0	13.07	45.0	F	B
8134.601	IN-EX	205 II (20A/C), 1.6	B1E (XU51C)	022077	8.0	13.07	45.0	F	B
8134.601	IN-EX	205 II (20A/C), 1.6	BAZ (XU5CP)/B1A (XU51C)	022072	8.0	13.07	45.0	F	B
8134.601	IN-EX	205 II (20A/C), 1.6	BAZ (XU5CP)/B1A (XU51C)	022077	8.0	13.07	45.0	F	B
8131.600	IN-EX	205 II (20A/C), 1.6	BAZ (XU5CP)/B1A (XU51C)	7701461009	8.0	13.07	45.0	F	G
8134.601	IN-EX	205 II (20A/C), 1.6 Aut.	BDY (XU5M2Z)/BDY (XU5M	022072	8.0	13.07	45.0	F	B
8134.601	IN-EX	205 II (20A/C), 1.6 Aut.	BDY (XU5M2Z)/BDY (XU5M	022077	8.0	13.07	45.0	F	B
8131.600	IN-EX	205 II (20A/C), 1.6 Aut.	BDY (XU5M2Z)/BDY (XU5M	7701461009	8.0	13.07	45.0	F	G
8134.601	IN-EX	205 II (20A/C), 1.6 GTI	180A (XU5J)/180Z (XU5J)	022072	8.0	13.07	45.0	F	B
8134.601	IN-EX	205 II (20A/C), 1.6 GTI	180A (XU5J)/180Z (XU5J)	022077	8.0	13.07	45.0	F	B
8131.600	IN-EX	205 II (20A/C), 1.6 GTI	180A (XU5J)/180Z (XU5J)	7701461009	8.0	13.07	45.0	F	G
8159.601	IN-EX	205 II (20A/C), 1.6 GTX	-	22060	7.0	13.06	47.6	F	B
8178.601	IN-EX	205 II (20A/C), 1.8 XDT	DJZ (XUD9Y)	22075	8.0	14.05	48.0	F	B
8178.601	IN-EX	205 II (20A/C), 1.8 XDT	DJZ (XUD9Y)	22076	8.0	14.05	48.0	F	B
8178.601	IN-EX	205 II (20A/C), 1.9 Diesel	D9A (XUD9)/162 (XUD9)	22075	8.0	14.05	48.0	F	B
8178.601	IN-EX	205 II (20A/C), 1.9 Diesel	D9A (XUD9)/162 (XUD9)	22076	8.0	14.05	48.0	F	B
8155.600	IN	205 II (20A/C), 1.9 Diesel	DJZ (XUD9Y)	FDU1256	5.5	11.06	47.5	F	G1
8179.600	EX	205 II (20A/C), 1.9 Diesel	DJZ (XUD9Y)	FDU1260	5.5	11.06	54.0	F	G1
8134.601	IN-EX	205 II (20A/C), 1.9 GTI	D2A (XU92C)	022072	8.0	13.07	45.0	F	B
8134.601	IN-EX	205 II (20A/C), 1.9 GTI	D2A (XU92C)	022077	8.0	13.07	45.0	F	B
8131.600	IN-EX	205 II (20A/C), 1.9 GTI	D2A (XU92C)	7701461009	8.0	13.07	45.0	F	G
8134.601	IN-EX	205 II (20A/C), 1.9 GTI	D6B (XU9JA)	022072	8.0	13.07	45.0	F	B
8134.601	IN-EX	205 II (20A/C), 1.9 GTI	D6B (XU9JA)	022077	8.0	13.07	45.0	F	B
8131.600	IN-EX	205 II (20A/C), 1.9 GTI	D6B (XU9JA)	7701461009	8.0	13.07	45.0	F	G
8134.601	IN-EX	205 II (20A/C), 1.9 GTI	DKZ (XU9JAZ)	022072	8.0	13.07	45.0	F	B
8134.601	IN-EX	205 II (20A/C), 1.9 GTI	DKZ (XU9JAZ)	022077	8.0	13.07	45.0	F	B
8134.601	IN-EX	205 II (20A/C), 1.9 GTI KAT	DFZ (XU9J1)	022072	8.0	13.07	45.0	F	B

(D1) Internal diameter, (D2) External diameter, (B) Shape, (C) Material

VALVE GUIDES

PEUGEOT

IVT Ref.	Type	Model	Engine	OEM Ref.	D1	D2	Length	B	C
8134.601	IN-EX	205 II (20A/C), 1.9 GTI KAT	DFZ (XU9J1)	022077	8.0	13.07	45.0	F	B
8131.600	IN-EX	205 II (20A/C), 1.9 GTI KAT	DFZ (XU9J1)	7701461009	8.0	13.07	45.0	F	G
8111.600	IN-EX	205 II 1.1	H1B (TU1)	22059	7.0	13.06	47.5	F	G
8111.600	IN-EX	205 II 1.1	HDZ (TU1M)	22059	7.0	13.06	47.5	F	G
8111.600	IN-EX	205 II 1.4	K1D (TU3A)	22059	7.0	13.06	47.5	F	G
8111.600	IN-EX	205 II 1.4	K2B (TU3S)	22059	7.0	13.06	47.5	F	G
8111.600	IN-EX	205 II 1.4	KDX (TU3MC)	22059	7.0	13.06	47.5	F	G
8111.600	IN-EX	205 II 1.4	KDY (TU3M)	22059	7.0	13.06	47.5	F	G
8111.600	IN-EX	205 II 1.4	TU3	22059	7.0	13.06	47.5	F	G
8111.600	IN-EX	206 2Volumi 1.1i	HFX (TU1JP)	22059	7.0	13.06	47.5	F	G
8111.600	IN-EX	206 2Volumi 1.1i	HFZ (TU1JP)	22059	7.0	13.06	47.5	F	G
8111.600	IN-EX	206 2Volumi 1.4i	KFW (TU3JP)	22059	7.0	13.06	47.5	F	G
8111.600	IN-EX	206 2Volumi 1.4i	KFX (TU3JP)	22059	7.0	13.06	47.5	F	G
8111.600	IN-EX	206 3Volumi 1.4i	KFW (TU3JP)	22059	7.0	13.06	47.5	F	G
8204.100	IN-EX	206 CC (2D), 1.6 HDi 110	9HZ (DV6TED4)		5.5	9.55	34.0	A	G1
8165.104	IN-EX	206 CC (2D), 1.6 HDi 110	9HZ (DV6TED4)	0220A6	5.5	9.55	34.0	A	S03
8127.905	IN-EX	206 CC (2D), 2.0 S16	RFN (EW10J4)	022124	6.0	12.06	40.8	P	S06
8159.601	IN-EX	206 Schrägheck (2A/C), 1.1	HFY (TU1JP)	22060	7.0	13.06	47.6	F	B
8159.601	IN-EX	206 Schrägheck (2A/C), 1.1 i	HFZ (TU1JP)/HFX (TU1JP)	22060	7.0	13.06	47.6	F	B
8204.100	IN-EX	206 Schrägheck (2A/C), 1.4 HDi e	8HZ (DV4TD)/8HX (DV4TD)		5.5	9.55	34.0	A	G1
8165.104	IN-EX	206 Schrägheck (2A/C), 1.4 HDi e	8HZ (DV4TD)/8HX (DV4TD)	0220A6	5.5	9.55	34.0	A	S03
8159.601	IN-EX	206 Schrägheck (2A/C), 1.4 i	KFX (TU3JP)/KFW (TU3JP)	22060	7.0	13.06	47.6	F	B
8204.100	IN-EX	206 Schrägheck (2A/C), 1.6 HDi 1	9HY (DV6TED4)/9HZ (DV6T		5.5	9.55	34.0	A	G1
8165.104	IN-EX	206 Schrägheck (2A/C), 1.6 HDi 1	9HY (DV6TED4)/9HZ (DV6T	0220A6	5.5	9.55	34.0	A	S03
8143.601	IN-EX	206 Schrägheck (2A/C), 1.6 i	NFZ (TU5JP)	022084	7.0	13.07	48.5	F	B
8127.905	IN-EX	206 Schrägheck (2A/C), 2.0 RC	RFK (EW10J4S)	022124	6.0	12.06	40.8	P	S06
8127.905	IN-EX	206 Schrägheck (2A/C), 2.0 S16	RFN (EW10J4)	022124	6.0	12.06	40.8	P	S06
8127.905	IN-EX	206 Schrägheck (2A/C), 2.0 S16	RFR (DEW10J4)	022124	6.0	12.06	40.8	P	S06
8159.601	IN-EX	206 Stufenheck, 1.4	KFV (TU3A)/KFW (TU3JP)	22060	7.0	13.06	47.6	F	B
8204.100	IN-EX	206 Stufenheck, 1.4 HDi eco 70	8HZ (DV4TD)		5.5	9.55	34.0	A	G1
8165.104	IN-EX	206 Stufenheck, 1.4 HDi eco 70	8HZ (DV4TD)	0220A6	5.5	9.55	34.0	A	S03
8159.601	IN-EX	206 SW (2E/K), 1.1	HFX (TU1JP)	22060	7.0	13.06	47.6	F	B
8159.601	IN-EX	206 SW (2E/K), 1.4	KFV (TU3A)/KFW (TU3JP)	22060	7.0	13.06	47.6	F	B
8204.100	IN-EX	206 SW (2E/K), 1.4 HDi	8HX (DV4TD)		5.5	9.55	34.0	A	G1
8165.104	IN-EX	206 SW (2E/K), 1.4 HDi	8HX (DV4TD)	0220A6	5.5	9.55	34.0	A	S03
8204.100	IN-EX	206 SW (2E/K), 1.6 HDi 110	9HZ (DV6TED4)		5.5	9.55	34.0	A	G1
8165.104	IN-EX	206 SW (2E/K), 1.6 HDi 110	9HZ (DV6TED4)	0220A6	5.5	9.55	34.0	A	S03
8127.905	IN-EX	206 SW (2E/K), 2.0 16V	RFN (EW10J4)	022124	6.0	12.06	40.8	P	S06
8111.600	IN-EX	206 SW 1.1i	HFX (TU1JP)	22059	7.0	13.06	47.5	F	G
8111.600	IN-EX	206 SW 1.4i	KFW (TU3JP)	22059	7.0	13.06	47.5	F	G
8159.601	IN-EX	206+ (T3E), 1.1	HFX (TU1A)/HFX (TU1JP)/T	22060	7.0	13.06	47.6	F	B
8204.100	IN-EX	206+ (T3E), 1.4 HDi eco 70	8HZ (DV4TD)/8HX (DV4TD)		5.5	9.55	34.0	A	G1
8165.104	IN-EX	206+ (T3E), 1.4 HDi eco 70	8HZ (DV4TD)/8HX (DV4TD)	0220A6	5.5	9.55	34.0	A	S03
8159.601	IN-EX	207 (WA_, WC_), 1.4	KFV (TU3A)	22060	7.0	13.06	47.6	F	B
8204.100	IN-EX	207 (WA_, WC_), 1.4 HDi	8HR (DV4C)/8HZ (DV4TD)		5.5	9.55	34.0	A	G1
8165.104	IN-EX	207 (WA_, WC_), 1.4 HDi	8HR (DV4C)/8HZ (DV4TD)	0220A6	5.5	9.55	34.0	A	S03
8193.101	IN	207 (WA_, WC_), 1.6 16V VTi	5FS (EP6C)/EP6/5FW (EP6)		5.0	9.05	42.0	A	B
8194.101	EX	207 (WA_, WC_), 1.6 16V VTi	5FS (EP6C)/EP6/5FW (EP6)		5.0	9.05	44.5	A	B
8204.100	IN-EX	207 (WA_, WC_), 1.6 HDi	9HP (DV6DTED)		5.5	9.55	34.0	A	G1
8165.104	IN-EX	207 (WA_, WC_), 1.6 HDi	9HP (DV6DTED)	0220A6	5.5	9.55	34.0	A	S03
8204.100	IN-EX	207 (WA_, WC_), 1.6 HDi	9HX (DV6ATED4)/9HV (DV6		5.5	9.55	34.0	A	G1
8165.104	IN-EX	207 (WA_, WC_), 1.6 HDi	9HX (DV6ATED4)/9HV (DV6	0220A6	5.5	9.55	34.0	A	S03
8204.100	IN-EX	207 (WA_, WC_), 1.6 HDi	9HY (DV6TED4)/9HZ (DV6T		5.5	9.55	34.0	A	G1
8165.104	IN-EX	207 (WA_, WC_), 1.6 HDi	9HY (DV6TED4)/9HZ (DV6T	0220A6	5.5	9.55	34.0	A	S03
8204.100	IN-EX	207 (WA_, WC_), 1.6 HDi 110	9HR (DV6C)		5.5	9.55	34.0	A	G1
8165.104	IN-EX	207 (WA_, WC_), 1.6 HDi 110	9HR (DV6C)	0220A6	5.5	9.55	34.0	A	S03
8111.600	IN-EX	207 1.4	KFV (TU3A)	22059	7.0	13.06	47.5	F	G
8204.100	IN-EX	207 CC (WD_), 1.6 HDi	9HR (DV6C)		5.5	9.55	34.0	A	G1
8165.104	IN-EX	207 CC (WD_), 1.6 HDi	9HR (DV6C)	0220A6	5.5	9.55	34.0	A	S03
8204.100	IN-EX	207 CC (WD_), 1.6 HDi	9HZ (DV6TED4)		5.5	9.55	34.0	A	G1
8165.104	IN-EX	207 CC (WD_), 1.6 HDi	9HZ (DV6TED4)	0220A6	5.5	9.55	34.0	A	S03
8159.601	IN-EX	207 SW (WK_), 1.4	KFV (TU3A)	22060	7.0	13.06	47.6	F	B

(D1) Internal diameter, (D2) External diameter, (B) Shape, (C) Material

VALVE GUIDES

PEUGEOT

IVT Ref.	Type	Model	Engine	OEM Ref.	D1	D2	Length	B	C
8194.101	EX	207 SW (WK_), 1.6 16V	5FS (EP6C)/EP6/5FW (EP6)		5.0	9.05	44.5	A	B
8193.101	IN	207 SW (WK_), 1.6 16V	5FS (EP6C)/EP6/5FW (EP6)		5.0	9.05	42.0	A	B
8204.100	IN-EX	207 SW (WK_), 1.6 HDi	9HP (DV6DTED)		5.5	9.55	34.0	A	G1
8165.104	IN-EX	207 SW (WK_), 1.6 HDi	9HP (DV6DTED)	0220A6	5.5	9.55	34.0	A	S03
8204.100	IN-EX	207 SW (WK_), 1.6 HDi	9HR (DV6C)		5.5	9.55	34.0	A	G1
8165.104	IN-EX	207 SW (WK_), 1.6 HDi	9HR (DV6C)	0220A6	5.5	9.55	34.0	A	S03
8204.100	IN-EX	207 SW (WK_), 1.6 HDi	9HX (DV6ATED4)		5.5	9.55	34.0	A	G1
8165.104	IN-EX	207 SW (WK_), 1.6 HDi	9HX (DV6ATED4)	0220A6	5.5	9.55	34.0	A	S03
8204.100	IN-EX	207 SW (WK_), 1.6 HDi	9HZ (DV6TED4)		5.5	9.55	34.0	A	G1
8165.104	IN-EX	207 SW (WK_), 1.6 HDi	9HZ (DV6TED4)	0220A6	5.5	9.55	34.0	A	S03
8204.100	IN-EX	208, 1.4 HDi	8HR (DV4C)/8HP (DV4C)		5.5	9.55	34.0	A	G1
8165.104	IN-EX	208, 1.4 HDi	8HR (DV4C)/8HP (DV4C)	0220A6	5.5	9.55	34.0	A	S03
8193.101	IN	208, 1.6	EP6CDT/5FV (EP6DT)		5.0	9.05	42.0	A	B
8194.101	EX	208, 1.6	EP6CDT/5FV (EP6DT)		5.0	9.05	44.5	A	B
8204.100	IN-EX	208, 1.6 HDi	9HD (DV6CTED)		5.5	9.55	34.0	A	G1
8165.104	IN-EX	208, 1.6 HDi	9HD (DV6CTED)	0220A6	5.5	9.55	34.0	A	S03
8204.100	IN-EX	208, 1.6 HDi	9HP (DV6DTED)		5.5	9.55	34.0	A	G1
8165.104	IN-EX	208, 1.6 HDi	9HP (DV6DTED)	0220A6	5.5	9.55	34.0	A	S03
8204.100	IN-EX	3 (BK), 1.6 DI Turbo	Y601		5.5	9.55	34.0	A	G1
8204.100	IN-EX	3 (BK), 1.6 MZ-CD	Y406		5.5	9.55	34.0	A	G1
8204.100	IN-EX	3 Stufenheck (BK), 1.6 DI Turbo	Y601		5.5	9.55	34.0	A	G1
8204.100	IN-EX	3008, 1.6 HDi	9HD (DV6CTED)		5.5	9.55	34.0	A	G1
8165.104	IN-EX	3008, 1.6 HDi	9HD (DV6CTED)	0220A6	5.5	9.55	34.0	A	S03
8204.100	IN-EX	3008, 1.6 HDi	9HR (DV6C)		5.5	9.55	34.0	A	G1
8165.104	IN-EX	3008, 1.6 HDi	9HR (DV6C)	0220A6	5.5	9.55	34.0	A	S03
8204.100	IN-EX	3008, 1.6 HDi	9HZ (DV6TED4)		5.5	9.55	34.0	A	G1
8165.104	IN-EX	3008, 1.6 HDi	9HZ (DV6TED4)	0220A6	5.5	9.55	34.0	A	S03
8194.101	EX	3008, 1.6 VTi	5FS (EP6C)/EP6/5FW (EP6)		5.0	9.05	44.5	A	B
8193.101	IN	3008, 1.6 VTi	5FS (EP6C)/EP6/5FW (EP6)		5.0	9.05	42.0	A	B
8134.601	IN-EX	305 II (581M), 1.6	171 (XU5S)	022072	8.0	13.07	45.0	F	B
8134.601	IN-EX	305 II (581M), 1.6	171 (XU5S)	022077	8.0	13.07	45.0	F	B
8134.601	IN-EX	305 II (581M), 1.6	B1A (XU51C)	022072	8.0	13.07	45.0	F	B
8134.601	IN-EX	305 II (581M), 1.6	B1A (XU51C)	022077	8.0	13.07	45.0	F	B
8131.600	IN-EX	305 II (581M), 1.6	B1A (XU51C)	7701461009	8.0	13.07	45.0	F	G
8134.601	IN-EX	305 II (581M), 1.6	BAZ (XU5CP)	022072	8.0	13.07	45.0	F	B
8134.601	IN-EX	305 II (581M), 1.6	BAZ (XU5CP)	022077	8.0	13.07	45.0	F	B
8134.601	IN-EX	305 II (581M), 1.9	159 (XU9S)	022072	8.0	13.07	45.0	F	B
8134.601	IN-EX	305 II (581M), 1.9	159 (XU9S)	022077	8.0	13.07	45.0	F	B
8131.600	IN-EX	305 II (581M), 1.9	159 (XU9S)	7701461009	8.0	13.07	45.0	F	G
8134.601	IN-EX	305 II (581M), 1.9	DFZ (XU9J1)	022072	8.0	13.07	45.0	F	B
8134.601	IN-EX	305 II (581M), 1.9	DFZ (XU9J1)	022077	8.0	13.07	45.0	F	B
8131.600	IN-EX	305 II (581M), 1.9	DFZ (XU9J1)	7701461009	8.0	13.07	45.0	F	G
8178.601	IN-EX	305 II (581M), 1.9 D	162 (XUD9)	22075	8.0	14.05	48.0	F	B
8178.601	IN-EX	305 II (581M), 1.9 D	162 (XUD9)	22076	8.0	14.05	48.0	F	B
8178.601	IN-EX	305 II (581M), 1.9 D	D9A (XUD9)/162 (XUD9)	22075	8.0	14.05	48.0	F	B
8178.601	IN-EX	305 II (581M), 1.9 D	D9A (XUD9)/162 (XUD9)	22076	8.0	14.05	48.0	F	B
8134.601	IN-EX	305 II Break (581E), 1.6	171 (XU5S)	022072	8.0	13.07	45.0	F	B
8134.601	IN-EX	305 II Break (581E), 1.6	171 (XU5S)	022077	8.0	13.07	45.0	F	B
8134.601	IN-EX	305 II Break (581E), 1.6	B1A (XU51C)	022072	8.0	13.07	45.0	F	B
8134.601	IN-EX	305 II Break (581E), 1.6	B1A (XU51C)	022077	8.0	13.07	45.0	F	B
8131.600	IN-EX	305 II Break (581E), 1.6	B1A (XU51C)	7701461009	8.0	13.07	45.0	F	G
8134.601	IN-EX	305 II Break (581E), 1.6	BAZ (XU5CP)	022072	8.0	13.07	45.0	F	B
8134.601	IN-EX	305 II Break (581E), 1.6	BAZ (XU5CP)	022077	8.0	13.07	45.0	F	B
8134.601	IN-EX	305 II Break (581E), 1.9	159 (XU9S)	022072	8.0	13.07	45.0	F	B
8134.601	IN-EX	305 II Break (581E), 1.9	159 (XU9S)	022077	8.0	13.07	45.0	F	B
8131.600	IN-EX	305 II Break (581E), 1.9	159 (XU9S)	7701461009	8.0	13.07	45.0	F	G
8134.601	IN-EX	305 II Break (581E), 1.9	DFZ (XU9J1)	022072	8.0	13.07	45.0	F	B
8134.601	IN-EX	305 II Break (581E), 1.9	DFZ (XU9J1)	022077	8.0	13.07	45.0	F	B
8131.600	IN-EX	305 II Break (581E), 1.9	DFZ (XU9J1)	7701461009	8.0	13.07	45.0	F	G
8178.601	IN-EX	305 II Break (581E), 1.9 Diesel	162 (XUD9)	22075	8.0	14.05	48.0	F	B
8178.601	IN-EX	305 II Break (581E), 1.9 Diesel	162 (XUD9)	22076	8.0	14.05	48.0	F	B
8178.601	IN-EX	305 II Break (581E), 1.9 Diesel	DJZ (XUD9Y)	22075	8.0	14.05	48.0	F	B

(D1) Internal diameter, (D2) External diameter, (B) Shape, (C) Material

VALVE GUIDES

PEUGEOT

IVT Ref.	Type	Model	Engine	OEM Ref.	D1	D2	Length	B	C
8178.601	IN-EX	305 II Break (581E), 1.9 Diesel	DJZ (XUD9Y)	22076	8.0	14.05	48.0	F	B
8159.601	IN-EX	306 (7B, N3, N5), 1.4 SL	KDX (TU3MC)/KFX (TU3JP)/	22060	7.0	13.06	47.6	F	B
8143.601	IN-EX	306 (7B, N3, N5), 1.6	-	022084	7.0	13.07	48.5	F	B
8159.601	IN-EX	306 (7B, N3, N5), 1.6	NFT (TU5JP)	22060	7.0	13.06	47.6	F	B
8143.601	IN-EX	306 (7B, N3, N5), 1.6 SR	NFZ (TU5JP)	022084	7.0	13.07	48.5	F	B
8154.601	IN-EX	306 (7B, N3, N5), 1.8 16V	LFY (XU7JP4)	022119	7.0	12.07	40.0	F	B
8154.601	IN-EX	306 (7B, N3, N5), 1.8 16V	LFY (XU7JP4)	022120	7.0	12.07	40.0	F	B
8127.905	IN-EX	306 (7B, N3, N5), 1.8 16V	LFY (XU7JP4)	022124	6.0	12.06	40.8	P	S06
8178.601	IN-EX	306 (7B, N3, N5), 1.9 D	DHY (XUD9TE)	22075	8.0	14.05	48.0	F	B
8178.601	IN-EX	306 (7B, N3, N5), 1.9 D	DHY (XUD9TE)	22076	8.0	14.05	48.0	F	B
8178.601	IN-EX	306 (7B, N3, N5), 1.9 SLD	DHV (XUD9BSD)	22075	8.0	14.05	48.0	F	B
8178.601	IN-EX	306 (7B, N3, N5), 1.9 SLD	DHV (XUD9BSD)	22076	8.0	14.05	48.0	F	B
8178.601	IN-EX	306 (7B, N3, N5), 1.9 SRDT	DHV (XUD9BSD)	22075	8.0	14.05	48.0	F	B
8178.601	IN-EX	306 (7B, N3, N5), 1.9 SRDT	DHV (XUD9BSD)	22076	8.0	14.05	48.0	F	B
8154.601	IN-EX	306 (7B, N3, N5), 2.0	RFV (XU10J4R)	022119	7.0	12.07	40.0	F	B
8154.601	IN-EX	306 (7B, N3, N5), 2.0	RFV (XU10J4R)	022120	7.0	12.07	40.0	F	B
8154.601	IN-EX	306 (7B, N3, N5), 2.0 S16	RFT (XU10J4)	022119	7.0	12.07	40.0	F	B
8154.601	IN-EX	306 (7B, N3, N5), 2.0 S16	RFT (XU10J4)	022120	7.0	12.07	40.0	F	B
8154.601	IN-EX	306 (7B, N3, N5), 2.0 S16	RFY (XU10J4Z)	022119	7.0	12.07	40.0	F	B
8154.601	IN-EX	306 (7B, N3, N5), 2.0 S16	RFY (XU10J4Z)	022120	7.0	12.07	40.0	F	B
8111.600	IN-EX	306 1.1	HDZ (TU1M)	22059	7.0	13.06	47.5	F	G
8111.600	IN-EX	306 1.4 SL	KDX (TU3MC)	22059	7.0	13.06	47.5	F	G
8111.600	IN-EX	306 1.4 SL	KFW (TU3JP)	22059	7.0	13.06	47.5	F	G
8111.600	IN-EX	306 1.4 SL	KFX (TU3JP)	22059	7.0	13.06	47.5	F	G
8111.600	IN-EX	306 2Volumi 1.1	HDZ (TU1M)	22059	7.0	13.06	47.5	F	G
8111.600	IN-EX	306 2Volumi 1.4	KDX (TU3MC)	22059	7.0	13.06	47.5	F	G
8111.600	IN-EX	306 2Volumi 1.4	KFW (TU3JP)	22059	7.0	13.06	47.5	F	G
8111.600	IN-EX	306 2Volumi 1.4	KFX (TU3JP)	22059	7.0	13.06	47.5	F	G
8111.600	IN-EX	306 2Volumi 1.4	TU3	22059	7.0	13.06	47.5	F	G
8159.601	IN-EX	306 Break (7E, N3, N5), 1.4	KFX (TU3JP)/KFW (TU3JP)	22060	7.0	13.06	47.6	F	B
8159.601	IN-EX	306 Break (7E, N3, N5), 1.6	NFT (TU5JP)	22060	7.0	13.06	47.6	F	B
8143.601	IN-EX	306 Break (7E, N3, N5), 1.6	NFZ (TU5JP)	022084	7.0	13.07	48.5	F	B
8134.601	IN-EX	306 Break (7E, N3, N5), 1.8	LFZ (XU7JP)	022072	8.0	13.07	45.0	F	B
8134.601	IN-EX	306 Break (7E, N3, N5), 1.8	LFZ (XU7JP)	022077	8.0	13.07	45.0	F	B
8131.600	IN-EX	306 Break (7E, N3, N5), 1.8	LFZ (XU7JP)	7701461009	8.0	13.07	45.0	F	G
8154.601	IN-EX	306 Break (7E, N3, N5), 1.8 16V	LFY (XU7JP4)	022119	7.0	12.07	40.0	F	B
8154.601	IN-EX	306 Break (7E, N3, N5), 1.8 16V	LFY (XU7JP4)	022120	7.0	12.07	40.0	F	B
8127.905	IN-EX	306 Break (7E, N3, N5), 1.8 16V	LFY (XU7JP4)	022124	6.0	12.06	40.8	P	S06
8178.601	IN-EX	306 Break (7E, N3, N5), 1.9 D	DHY (XUD9TE)	22075	8.0	14.05	48.0	F	B
8178.601	IN-EX	306 Break (7E, N3, N5), 1.9 D	DHY (XUD9TE)	22076	8.0	14.05	48.0	F	B
8134.601	IN-EX	306 Break (7E, N3, N5), 1.9 D	DJY (XUD9A)	022072	8.0	13.07	45.0	F	B
8134.601	IN-EX	306 Break (7E, N3, N5), 1.9 D	DJY (XUD9A)	022077	8.0	13.07	45.0	F	B
8178.601	IN-EX	306 Break (7E, N3, N5), 1.9 TD	D9A (XUD9)/162 (XUD9)	22075	8.0	14.05	48.0	F	B
8178.601	IN-EX	306 Break (7E, N3, N5), 1.9 TD	D9A (XUD9)/162 (XUD9)	22076	8.0	14.05	48.0	F	B
8154.601	IN-EX	306 Break (7E, N3, N5), 2.0	RFV (XU10J4R)	022119	7.0	12.07	40.0	F	B
8154.601	IN-EX	306 Break (7E, N3, N5), 2.0	RFV (XU10J4R)	022120	7.0	12.07	40.0	F	B
8111.600	IN-EX	306 Break 1.4	KFX (TU3JP)	22059	7.0	13.06	47.5	F	G
8159.601	IN-EX	306 Cabriolet (7D, N3, N5), 1.6	NFT (TU5JP)	22060	7.0	13.06	47.6	F	B
8143.601	IN-EX	306 Cabriolet (7D, N3, N5), 1.6	NFZ (TU5JP)	022084	7.0	13.07	48.5	F	B
8154.601	IN-EX	306 Cabriolet (7D, N3, N5), 1.8 16	LFY (XU7JP4)	022119	7.0	12.07	40.0	F	B
8154.601	IN-EX	306 Cabriolet (7D, N3, N5), 1.8 16	LFY (XU7JP4)	022120	7.0	12.07	40.0	F	B
8127.905	IN-EX	306 Cabriolet (7D, N3, N5), 1.8 16	LFY (XU7JP4)	022124	6.0	12.06	40.8	P	S06
8154.601	IN-EX	306 Cabriolet (7D, N3, N5), 2.0 16	RFV (XU10J4R)	022119	7.0	12.07	40.0	F	B
8154.601	IN-EX	306 Cabriolet (7D, N3, N5), 2.0 16	RFV (XU10J4R)	022120	7.0	12.07	40.0	F	B
8159.601	IN-EX	306 Schrägheck (7A, 7C, N3, N5),	KDX (TU3MC)/KFX (TU3JP)/	22060	7.0	13.06	47.6	F	B
8159.601	IN-EX	306 Schrägheck (7A, 7C, N3, N5),	NFT (TU5JP)	22060	7.0	13.06	47.6	F	B
8143.601	IN-EX	306 Schrägheck (7A, 7C, N3, N5),	NFZ (TU5JP)	022084	7.0	13.07	48.5	F	B
8154.601	IN-EX	306 Schrägheck (7A, 7C, N3, N5),	LFY (XU7JP4)	022119	7.0	12.07	40.0	F	B
8154.601	IN-EX	306 Schrägheck (7A, 7C, N3, N5),	LFY (XU7JP4)	022120	7.0	12.07	40.0	F	B
8127.905	IN-EX	306 Schrägheck (7A, 7C, N3, N5),	LFY (XU7JP4)	022124	6.0	12.06	40.8	P	S06
8178.601	IN-EX	306 Schrägheck (7A, 7C, N3, N5),	DHV (XUD9BSD)	22075	8.0	14.05	48.0	F	B
8178.601	IN-EX	306 Schrägheck (7A, 7C, N3, N5),	DHV (XUD9BSD)	22076	8.0	14.05	48.0	F	B

(D1) Internal diameter, (D2) External diameter, (B) Shape, (C) Material

VALVE GUIDES

IVT Ref.	Type	Model	Engine	OEM Ref.	D1	D2	Length	B	C
PEUGEOT									
8178.601	IN-EX	306 Schrägheck (7A, 7C, N3, N5),	DHY (XUD9TE)	22075	8.0	14.05	48.0	F	B
8178.601	IN-EX	306 Schrägheck (7A, 7C, N3, N5),	DHY (XUD9TE)	22076	8.0	14.05	48.0	F	B
8178.601	IN-EX	306 Schrägheck (7A, 7C, N3, N5),	DJZ (XUD9Y)	22075	8.0	14.05	48.0	F	B
8178.601	IN-EX	306 Schrägheck (7A, 7C, N3, N5),	DJZ (XUD9Y)	22076	8.0	14.05	48.0	F	B
8154.601	IN-EX	306 Schrägheck (7A, 7C, N3, N5),	RFV (XU10J4R)	022119	7.0	12.07	40.0	F	B
8154.601	IN-EX	306 Schrägheck (7A, 7C, N3, N5),	RFV (XU10J4R)	022120	7.0	12.07	40.0	F	B
8147.601	IN-EX	306 Schrägheck (7A, 7C, N3, N5),	RFS (XU10J4RS)	022096	6.0	12.06	40.8	F	B
8154.601	IN-EX	306 Schrägheck (7A, 7C, N3, N5),	RFT (XU10J4)	022119	7.0	12.07	40.0	F	B
8154.601	IN-EX	306 Schrägheck (7A, 7C, N3, N5),	RFT (XU10J4)	022120	7.0	12.07	40.0	F	B
8154.601	IN-EX	306 Schrägheck (7A, 7C, N3, N5),	RFY (XU10J4Z)	022119	7.0	12.07	40.0	F	B
8154.601	IN-EX	306 Schrägheck (7A, 7C, N3, N5),	RFY (XU10J4Z)	022120	7.0	12.07	40.0	F	B
8159.601	IN-EX	307 (3A/C), 1.4	KFW (TU3JP)	22060	7.0	13.06	47.6	F	B
8204.100	IN-EX	307 (3A/C), 1.4 HDi	8HZ (DV4TD)/8HX (DV4TD)		5.5	9.55	34.0	A	G1
8165.104	IN-EX	307 (3A/C), 1.4 HDi	8HZ (DV4TD)/8HX (DV4TD)	0220A6	5.5	9.55	34.0	A	S03
8204.100	IN-EX	307 (3A/C), 1.6 HDi 110	9HY (DV6TED4)/9HZ (DV6T		5.5	9.55	34.0	A	G1
8165.104	IN-EX	307 (3A/C), 1.6 HDi 110	9HY (DV6TED4)/9HZ (DV6T	0220A6	5.5	9.55	34.0	A	S03
8127.905	IN-EX	307 (3A/C), 2.0 16V	RFK (EW10J4S)	022124	6.0	12.06	40.8	P	S06
8127.905	IN-EX	307 (3A/C), 2.0 16V	RFN (EW10J4)	022124	6.0	12.06	40.8	P	S06
8111.600	IN-EX	307 1.4	KFW (TU3JP)	22059	7.0	13.06	47.5	F	G
8159.601	IN-EX	307 Break (3E), 1.4	KFW (TU3JP)	22060	7.0	13.06	47.6	F	B
8204.100	IN-EX	307 Break (3E), 1.4 HDi	8HZ (DV4TD)		5.5	9.55	34.0	A	G1
8165.104	IN-EX	307 Break (3E), 1.4 HDi	8HZ (DV4TD)	0220A6	5.5	9.55	34.0	A	S03
8204.100	IN-EX	307 Break (3E), 1.6 HDi	9HV (DV6ATED4)		5.5	9.55	34.0	A	G1
8165.104	IN-EX	307 Break (3E), 1.6 HDi	9HV (DV6ATED4)	0220A6	5.5	9.55	34.0	A	S03
8204.100	IN-EX	307 Break (3E), 1.6 HDi 110	9HY (DV6TED4)/9HZ (DV6T		5.5	9.55	34.0	A	G1
8165.104	IN-EX	307 Break (3E), 1.6 HDi 110	9HY (DV6TED4)/9HZ (DV6T	0220A6	5.5	9.55	34.0	A	S03
8127.905	IN-EX	307 Break (3E), 2.0	RFN (EW10J4)	022124	6.0	12.06	40.8	P	S06
8127.905	IN-EX	307 Break (3E), 2.0 16V	RFK (EW10J4S)	022124	6.0	12.06	40.8	P	S06
8111.600	IN-EX	307 Break 1.4	KFW (TU3JP)	22059	7.0	13.06	47.5	F	G
8127.905	IN-EX	307 CC (3B), 2.0 16V	RFK (EW10J4S)	022124	6.0	12.06	40.8	P	S06
8127.905	IN-EX	307 CC (3B), 2.0 16V	RFN (EW10J4)	022124	6.0	12.06	40.8	P	S06
8204.100	IN-EX	307 SW (3H), 1.4 HDi 70	8HZ (DV4TD)		5.5	9.55	34.0	A	G1
8165.104	IN-EX	307 SW (3H), 1.4 HDi 70	8HZ (DV4TD)	0220A6	5.5	9.55	34.0	A	S03
8204.100	IN-EX	307 SW (3H), 1.6 HDI 110	9HY (DV6TED4)/9HZ (DV6T		5.5	9.55	34.0	A	G1
8165.104	IN-EX	307 SW (3H), 1.6 HDI 110	9HY (DV6TED4)/9HZ (DV6T	0220A6	5.5	9.55	34.0	A	S03
8127.905	IN-EX	307 SW (3H), 2.0 16V	RFN (EW10J4)	022124	6.0	12.06	40.8	P	S06
8193.101	IN	308 (4A_, 4C_), 1.6 16V	EP6/5FW (EP6)		5.0	9.05	42.0	A	B
8194.101	EX	308 (4A_, 4C_), 1.6 16V	EP6/5FW (EP6)		5.0	9.05	44.5	A	B
8193.101	IN	308 (4A_, 4C_), 1.6 16V	EP6CDT		5.0	9.05	42.0	A	B
8194.101	EX	308 (4A_, 4C_), 1.6 16V	EP6CDT		5.0	9.05	44.5	A	B
8193.101	IN	308 (4A_, 4C_), 1.6 GTi	EP6CDTX		5.0	9.05	42.0	A	B
8194.101	EX	308 (4A_, 4C_), 1.6 GTi	EP6CDTX		5.0	9.05	44.5	A	B
8204.100	IN-EX	308 (4A_, 4C_), 1.6 HDi	-		5.5	9.55	34.0	A	G1
8165.104	IN-EX	308 (4A_, 4C_), 1.6 HDi	-	0220A6	5.5	9.55	34.0	A	S03
8204.100	IN-EX	308 (4A_, 4C_), 1.6 HDi	9HP (DV6DTED)		5.5	9.55	34.0	A	G1
8165.104	IN-EX	308 (4A_, 4C_), 1.6 HDi	9HP (DV6DTED)	0220A6	5.5	9.55	34.0	A	S03
8204.100	IN-EX	308 (4A_, 4C_), 1.6 HDi	9HR (DV6C)		5.5	9.55	34.0	A	G1
8165.104	IN-EX	308 (4A_, 4C_), 1.6 HDi	9HR (DV6C)	0220A6	5.5	9.55	34.0	A	S03
8204.100	IN-EX	308 (4A_, 4C_), 1.6 HDi	9HZ (DV6TED4)		5.5	9.55	34.0	A	G1
8165.104	IN-EX	308 (4A_, 4C_), 1.6 HDi	9HZ (DV6TED4)	0220A6	5.5	9.55	34.0	A	S03
8194.101	EX	308 CC, 1.6 16V	EP6		5.0	9.05	44.5	A	B
8193.101	IN	308 CC, 1.6 16V	EP6		5.0	9.05	42.0	A	B
8194.101	EX	308 CC, 1.6 16V	EP6CDT		5.0	9.05	44.5	A	B
8193.101	IN	308 CC, 1.6 16V	EP6CDT		5.0	9.05	42.0	A	B
8204.100	IN-EX	308 CC, 1.6 HDi	-		5.5	9.55	34.0	A	G1
8165.104	IN-EX	308 CC, 1.6 HDi	-	0220A6	5.5	9.55	34.0	A	S03
8204.100	IN-EX	308 CC, 1.6 HDi	9HR (DV6C)		5.5	9.55	34.0	A	G1
8165.104	IN-EX	308 CC, 1.6 HDi	9HR (DV6C)	0220A6	5.5	9.55	34.0	A	S03
8194.101	EX	308 CC, 1.6 THP	EP6CDTX		5.0	9.05	44.5	A	B
8193.101	IN	308 CC, 1.6 THP	EP6CDTX		5.0	9.05	42.0	A	B
8193.101	IN	308 SW, 1.6 16V	EP6/5FW (EP6)		5.0	9.05	42.0	A	B
8194.101	EX	308 SW, 1.6 16V	EP6/5FW (EP6)		5.0	9.05	44.5	A	B

(D1) Internal diameter, (D2) External diameter, (B) Shape, (C) Material

VALVE GUIDES

PEUGEOT

IVT Ref.	Type	Model	Engine	OEM Ref.	D1	D2	Length	B	C
8193.101	IN	308 SW, 1.6 16V	EP6CDT		5.0	9.05	42.0	A	B
8194.101	EX	308 SW, 1.6 16V	EP6CDT		5.0	9.05	44.5	A	B
8204.100	IN-EX	308 SW, 1.6 HDi	9HP (DV6DTED)		5.5	9.55	34.0	A	G1
8165.104	IN-EX	308 SW, 1.6 HDi	9HP (DV6DTED)	0220A6	5.5	9.55	34.0	A	S03
8204.100	IN-EX	308 SW, 1.6 HDi	9HR (DV6C)		5.5	9.55	34.0	A	G1
8165.104	IN-EX	308 SW, 1.6 HDi	9HR (DV6C)	0220A6	5.5	9.55	34.0	A	S03
8204.100	IN-EX	308 SW, 1.6 HDi	9HX (DV6ATED4)/9HV (DV6		5.5	9.55	34.0	A	G1
8165.104	IN-EX	308 SW, 1.6 HDi	9HX (DV6ATED4)/9HV (DV6	0220A6	5.5	9.55	34.0	A	S03
8204.100	IN-EX	308 SW, 1.6 HDi	9HZ (DV6TED4)		5.5	9.55	34.0	A	G1
8165.104	IN-EX	308 SW, 1.6 HDi	9HZ (DV6TED4)	0220A6	5.5	9.55	34.0	A	S03
8159.601	IN-EX	309 I (10C, 10A), 1.4	K1D (TU3A)	22060	7.0	13.06	47.6	F	B
8159.601	IN-EX	309 I (10C, 10A), 1.4	K2B (TU3S)	22060	7.0	13.06	47.6	F	B
8159.601	IN-EX	309 I (10C, 10A), 1.4	KDZ (TU3M)/KDY (TU3M)	22060	7.0	13.06	47.6	F	B
8159.601	IN-EX	309 I (10C, 10A), 1.6	-	22060	7.0	13.06	47.6	F	B
8134.601	IN-EX	309 I (10C, 10A), 1.6	180Z (XU5J)/B6B (XU5J)	022072	8.0	13.07	45.0	F	B
8134.601	IN-EX	309 I (10C, 10A), 1.6	180Z (XU5J)/B6B (XU5J)	022077	8.0	13.07	45.0	F	B
8134.601	IN-EX	309 I (10C, 10A), 1.6	B1A (XU51C)	022072	8.0	13.07	45.0	F	B
8134.601	IN-EX	309 I (10C, 10A), 1.6	B1A (XU51C)	022077	8.0	13.07	45.0	F	B
8134.601	IN-EX	309 I (10C, 10A), 1.6	B1E (XU51C)	022072	8.0	13.07	45.0	F	B
8134.601	IN-EX	309 I (10C, 10A), 1.6	B1E (XU51C)	022077	8.0	13.07	45.0	F	B
8131.600	IN-EX	309 I (10C, 10A), 1.6	B1E (XU51C)	7701461009	8.0	13.07	45.0	F	G
8134.601	IN-EX	309 I (10C, 10A), 1.6 KAT	BAZ (XU5CP)	022072	8.0	13.07	45.0	F	B
8134.601	IN-EX	309 I (10C, 10A), 1.6 KAT	BAZ (XU5CP)	022077	8.0	13.07	45.0	F	B
8134.601	IN-EX	309 I (10C, 10A), 1.9	D2B (XU9S)	022072	8.0	13.07	45.0	F	B
8134.601	IN-EX	309 I (10C, 10A), 1.9	D2B (XU9S)	022077	8.0	13.07	45.0	F	B
8131.600	IN-EX	309 I (10C, 10A), 1.9	D2B (XU9S)	7701461009	8.0	13.07	45.0	F	G
8134.601	IN-EX	309 I (10C, 10A), 1.9	DDZ (XU9M)	022072	8.0	13.07	45.0	F	B
8134.601	IN-EX	309 I (10C, 10A), 1.9	DDZ (XU9M)	022077	8.0	13.07	45.0	F	B
8134.601	IN-EX	309 I (10C, 10A), 1.9	DFZ (XU9J1)	022072	8.0	13.07	45.0	F	B
8134.601	IN-EX	309 I (10C, 10A), 1.9	DFZ (XU9J1)	022077	8.0	13.07	45.0	F	B
8131.600	IN-EX	309 I (10C, 10A), 1.9	DFZ (XU9J1)	7701461009	8.0	13.07	45.0	F	G
8178.601	IN-EX	309 I (10C, 10A), 1.9 D	D9A (XUD9)/DJZ (XUD9Y)/1	22075	8.0	14.05	48.0	F	B
8178.601	IN-EX	309 I (10C, 10A), 1.9 D	D9A (XUD9)/DJZ (XUD9Y)/1	22076	8.0	14.05	48.0	F	B
8134.601	IN-EX	309 I (10C, 10A), 1.9 GTI	D6B (XU9JA)	022072	8.0	13.07	45.0	F	B
8134.601	IN-EX	309 I (10C, 10A), 1.9 GTI	D6B (XU9JA)	022077	8.0	13.07	45.0	F	B
8134.601	IN-EX	309 I (10C, 10A), 1.9 GTI	DKZ (XU9JAZ)	022072	8.0	13.07	45.0	F	B
8134.601	IN-EX	309 I (10C, 10A), 1.9 GTI	DKZ (XU9JAZ)	022077	8.0	13.07	45.0	F	B
8131.600	IN-EX	309 I (10C, 10A), 1.9 GTI	DKZ (XU9JAZ)	7701461009	8.0	13.07	45.0	F	G
8111.600	IN-EX	309 I 1.4	K1D (TU3A)	22059	7.0	13.06	47.5	F	G
8111.600	IN-EX	309 I 1.4	K2B (TU3S)	22059	7.0	13.06	47.5	F	G
8111.600	IN-EX	309 I 1.4	TU3	22059	7.0	13.06	47.5	F	G
8134.601	IN-EX	309 II (3C, 3A), 1.6	B2A (XU52C/K)	022072	8.0	13.07	45.0	F	B
8134.601	IN-EX	309 II (3C, 3A), 1.6	B2A (XU52C/K)	022072	8.0	13.07	45.0	F	B
8134.601	IN-EX	309 II (3C, 3A), 1.6	B2A (XU52C/K)	022077	8.0	13.07	45.0	F	B
8134.601	IN-EX	309 II (3C, 3A), 1.6	B2A (XU52C/K)	022077	8.0	13.07	45.0	F	B
8134.601	IN-EX	309 II (3C, 3A), 1.6	BDY (XU5M2Z)/BDZ (XU5M)	022072	8.0	13.07	45.0	F	B
8134.601	IN-EX	309 II (3C, 3A), 1.6	BDY (XU5M2Z)/BDZ (XU5M)	022077	8.0	13.07	45.0	F	B
8131.600	IN-EX	309 II (3C, 3A), 1.6	BDY (XU5M2Z)/BDZ (XU5M)	7701461009	8.0	13.07	45.0	F	G
8134.601	IN-EX	309 II (3C, 3A), 1.9	DDZ (XU9M)	022072	8.0	13.07	45.0	F	B
8134.601	IN-EX	309 II (3C, 3A), 1.9	DDZ (XU9M)	022077	8.0	13.07	45.0	F	B
8134.601	IN-EX	309 II (3C, 3A), 1.9	DFZ (XU9J1)	022072	8.0	13.07	45.0	F	B
8134.601	IN-EX	309 II (3C, 3A), 1.9	DFZ (XU9J1)	022077	8.0	13.07	45.0	F	B
8131.600	IN-EX	309 II (3C, 3A), 1.9	DFZ (XU9J1)	7701461009	8.0	13.07	45.0	F	G
8178.601	IN-EX	309 II (3C, 3A), 1.9 Diesel	A8A (XUD7TE)/AJZ (XUD7T	22075	8.0	14.05	48.0	F	B
8178.601	IN-EX	309 II (3C, 3A), 1.9 Diesel	A8A (XUD7TE)/AJZ (XUD7T	22076	8.0	14.05	48.0	F	B
8134.601	IN-EX	309 II (3C, 3A), 1.9 GTI	DKZ (XU9JAZ)	022072	8.0	13.07	45.0	F	B
8134.601	IN-EX	309 II (3C, 3A), 1.9 GTI	DKZ (XU9JAZ)	022077	8.0	13.07	45.0	F	B
8131.600	IN-EX	309 II (3C, 3A), 1.9 GTI	DKZ (XU9JAZ)	7701461009	8.0	13.07	45.0	F	G
8154.601	IN-EX	309 II (3C, 3A), 1.9 GTI 16V	D6C (XU9J4)	022119	7.0	12.07	40.0	F	B
8154.601	IN-EX	309 II (3C, 3A), 1.9 GTI 16V	D6C (XU9J4)	022120	7.0	12.07	40.0	F	B
8154.601	IN-EX	309 II (3C, 3A), 1.9 GTI 16V	DFW (XU9J4Z)	022119	7.0	12.07	40.0	F	B
8154.601	IN-EX	309 II (3C, 3A), 1.9 GTI 16V	DFW (XU9J4Z)	022120	7.0	12.07	40.0	F	B

(D1) Internal diameter, (D2) External diameter, (B) Shape, (C) Material

VALVE GUIDES

PEUGEOT

IVT Ref.	Type	Model	Engine	OEM Ref.	D1	D2	Length	B	C
8111.600	IN-EX	309 II 1.4	K1D (TU3A)	22059	7.0	13.06	47.5	F	G
8111.600	IN-EX	309 II 1.4	TU3	22059	7.0	13.06	47.5	F	G
8134.601	IN-EX	405 I (15B), 1.6	B1E (XU51C)	022072	8.0	13.07	45.0	F	B
8134.601	IN-EX	405 I (15B), 1.6	B1E (XU51C)	022077	8.0	13.07	45.0	F	B
8134.601	IN-EX	405 I (15B), 1.6	B1E (XU51C)/BAZ (XU5CP)	022072	8.0	13.07	45.0	F	B
8134.601	IN-EX	405 I (15B), 1.6	B1E (XU51C)/BAZ (XU5CP)	022077	8.0	13.07	45.0	F	B
8134.601	IN-EX	405 I (15B), 1.6	B2A (XU52C/K)	022072	8.0	13.07	45.0	F	B
8134.601	IN-EX	405 I (15B), 1.6	B2A (XU52C/K)	022077	8.0	13.07	45.0	F	B
8134.601	IN-EX	405 I (15B), 1.6	BDY (XU5M2Z)/BDZ (XU5M)	022072	8.0	13.07	45.0	F	B
8134.601	IN-EX	405 I (15B), 1.6	BDY (XU5M2Z)/BDZ (XU5M)	022077	8.0	13.07	45.0	F	B
8131.600	IN-EX	405 I (15B), 1.6	BDY (XU5M2Z)/BDZ (XU5M)	7701461009	8.0	13.07	45.0	F	G
8134.601	IN-EX	405 I (15B), 1.6	BDZ (XU5M)	022072	8.0	13.07	45.0	F	B
8134.601	IN-EX	405 I (15B), 1.6	BDZ (XU5M)	022077	8.0	13.07	45.0	F	B
8131.600	IN-EX	405 I (15B), 1.6	BDZ (XU5M)	7701461009	8.0	13.07	45.0	F	G
8178.601	IN-EX	405 I (15B), 1.8 Turbo Diesel	DJZ (XUD9Y)	22075	8.0	14.05	48.0	F	B
8178.601	IN-EX	405 I (15B), 1.8 Turbo Diesel	DJZ (XUD9Y)	22076	8.0	14.05	48.0	F	B
8134.601	IN-EX	405 I (15B), 1.9	D2C (XU92C)	022072	8.0	13.07	45.0	F	B
8134.601	IN-EX	405 I (15B), 1.9	D2C (XU92C)	022077	8.0	13.07	45.0	F	B
8131.600	IN-EX	405 I (15B), 1.9	D2C (XU92C)	7701461009	8.0	13.07	45.0	F	G
8134.601	IN-EX	405 I (15B), 1.9	DDZ (XU9M)	022072	8.0	13.07	45.0	F	B
8134.601	IN-EX	405 I (15B), 1.9	DDZ (XU9M)	022077	8.0	13.07	45.0	F	B
8134.601	IN-EX	405 I (15B), 1.9	DKZ (XU9JAZ)	022072	8.0	13.07	45.0	F	B
8134.601	IN-EX	405 I (15B), 1.9	DKZ (XU9JAZ)	022077	8.0	13.07	45.0	F	B
8131.600	IN-EX	405 I (15B), 1.9	DKZ (XU9JAZ)	7701461009	8.0	13.07	45.0	F	G
8134.601	IN-EX	405 I (15B), 1.9 4x4	DDZ (XU9M)	022072	8.0	13.07	45.0	F	B
8134.601	IN-EX	405 I (15B), 1.9 4x4	DDZ (XU9M)	022077	8.0	13.07	45.0	F	B
8178.601	IN-EX	405 I (15B), 1.9 Diesel	A8A (XUD7TE)/AJZ (XUD7T	22075	8.0	14.05	48.0	F	B
8178.601	IN-EX	405 I (15B), 1.9 Diesel	A8A (XUD7TE)/AJZ (XUD7T	22076	8.0	14.05	48.0	F	B
8134.601	IN-EX	405 I (15B), 1.9 Injection	DFZ (XU9J1)	022072	8.0	13.07	45.0	F	B
8134.601	IN-EX	405 I (15B), 1.9 Injection	DFZ (XU9J1)	022077	8.0	13.07	45.0	F	B
8131.600	IN-EX	405 I (15B), 1.9 Injection	DFZ (XU9J1)	7701461009	8.0	13.07	45.0	F	G
8154.601	IN-EX	405 I (15B), 1.9 Sport MI-16	D6C (XU9J4)	022119	7.0	12.07	40.0	F	B
8154.601	IN-EX	405 I (15B), 1.9 Sport MI-16	D6C (XU9J4)	022120	7.0	12.07	40.0	F	B
8154.601	IN-EX	405 I (15B), 1.9 Sport MI-16	DFW (XU9J4Z)	022119	7.0	12.07	40.0	F	B
8154.601	IN-EX	405 I (15B), 1.9 Sport MI-16	DFW (XU9J4Z)	022120	7.0	12.07	40.0	F	B
8154.601	IN-EX	405 I (15B), 1.9 SPort MI-16 4x4	DFW (XU9J4Z)	022119	7.0	12.07	40.0	F	B
8154.601	IN-EX	405 I (15B), 1.9 SPort MI-16 4x4	DFW (XU9J4Z)	022120	7.0	12.07	40.0	F	B
8111.600	IN-EX	405 I 1.4	TU3	22059	7.0	13.06	47.5	F	G
8134.601	IN-EX	405 I Break (15E), 1.6	B1E (XU51C)	022072	8.0	13.07	45.0	F	B
8134.601	IN-EX	405 I Break (15E), 1.6	B1E (XU51C)	022077	8.0	13.07	45.0	F	B
8134.601	IN-EX	405 I Break (15E), 1.6	BAZ (XU5CP)	022072	8.0	13.07	45.0	F	B
8134.601	IN-EX	405 I Break (15E), 1.6	BAZ (XU5CP)	022077	8.0	13.07	45.0	F	B
8134.601	IN-EX	405 I Break (15E), 1.6	BDY (XU5M2Z)/BDZ (XU5M)	022072	8.0	13.07	45.0	F	B
8134.601	IN-EX	405 I Break (15E), 1.6	BDY (XU5M2Z)/BDZ (XU5M)	022077	8.0	13.07	45.0	F	B
8131.600	IN-EX	405 I Break (15E), 1.6	BDY (XU5M2Z)/BDZ (XU5M)	7701461009	8.0	13.07	45.0	F	G
8134.601	IN-EX	405 I Break (15E), 1.6	BDZ (XU5M)	022072	8.0	13.07	45.0	F	B
8134.601	IN-EX	405 I Break (15E), 1.6	BDZ (XU5M)	022077	8.0	13.07	45.0	F	B
8131.600	IN-EX	405 I Break (15E), 1.6	BDZ (XU5M)	7701461009	8.0	13.07	45.0	F	G
8178.601	IN-EX	405 I Break (15E), 1.8 TD	DJZ (XUD9Y)	22075	8.0	14.05	48.0	F	B
8178.601	IN-EX	405 I Break (15E), 1.8 TD	DJZ (XUD9Y)	22076	8.0	14.05	48.0	F	B
8134.601	IN-EX	405 I Break (15E), 1.9	D2C (XU92C)	022072	8.0	13.07	45.0	F	B
8134.601	IN-EX	405 I Break (15E), 1.9	D2C (XU92C)	022077	8.0	13.07	45.0	F	B
8131.600	IN-EX	405 I Break (15E), 1.9	D2C (XU92C)	7701461009	8.0	13.07	45.0	F	G
8134.601	IN-EX	405 I Break (15E), 1.9	DDZ (XU9M)	022072	8.0	13.07	45.0	F	B
8134.601	IN-EX	405 I Break (15E), 1.9	DDZ (XU9M)	022077	8.0	13.07	45.0	F	B
8134.601	IN-EX	405 I Break (15E), 1.9	DFZ (XU9J1)	022072	8.0	13.07	45.0	F	B
8134.601	IN-EX	405 I Break (15E), 1.9	DFZ (XU9J1)	022077	8.0	13.07	45.0	F	B
8131.600	IN-EX	405 I Break (15E), 1.9	DFZ (XU9J1)	7701461009	8.0	13.07	45.0	F	G
8134.601	IN-EX	405 I Break (15E), 1.9	DKZ (XU9JAZ)	022072	8.0	13.07	45.0	F	B
8134.601	IN-EX	405 I Break (15E), 1.9	DKZ (XU9JAZ)	022077	8.0	13.07	45.0	F	B
8131.600	IN-EX	405 I Break (15E), 1.9	DKZ (XU9JAZ)	7701461009	8.0	13.07	45.0	F	G
8134.601	IN-EX	405 I Break (15E), 1.9 4x4	DDZ (XU9M)	022072	8.0	13.07	45.0	F	B

(D1) Internal diameter, (D2) External diameter, (B) Shape, (C) Material

VALVE GUIDES

PEUGEOT

IVT Ref.	Type	Model	Engine	OEM Ref.	D1	D2	Length	B	C
8134.601	IN-EX	405 I Break (15E), 1.9 4x4	DDZ (XU9M)	022077	8.0	13.07	45.0	F	B
8178.601	IN-EX	405 I Break (15E), 1.9 D	DJZ (XUD9Y)	22075	8.0	14.05	48.0	F	B
8178.601	IN-EX	405 I Break (15E), 1.9 D	DJZ (XUD9Y)	22076	8.0	14.05	48.0	F	B
8111.600	IN-EX	405 I Break 1.4	TU3	22059	7.0	13.06	47.5	F	G
8134.601	IN-EX	405 II (4B), 1.6	BFZ (XU5JP)/BDY (XU5M2Z)	022072	8.0	13.07	45.0	F	B
8134.601	IN-EX	405 II (4B), 1.6	BFZ (XU5JP)/BDY (XU5M2Z)	022077	8.0	13.07	45.0	F	B
8134.601	IN-EX	405 II (4B), 1.8	LFZ (XU7JP)	022072	8.0	13.07	45.0	F	B
8134.601	IN-EX	405 II (4B), 1.8	LFZ (XU7JP)	022077	8.0	13.07	45.0	F	B
8131.600	IN-EX	405 II (4B), 1.8	LFZ (XU7JP)	7701461009	8.0	13.07	45.0	F	G
8178.601	IN-EX	405 II (4B), 1.9 D	DHY (XUD9TE)	22075	8.0	14.05	48.0	F	B
8178.601	IN-EX	405 II (4B), 1.9 D	DHY (XUD9TE)	22076	8.0	14.05	48.0	F	B
8178.601	IN-EX	405 II (4B), 1.9 TD	DHY (XUD9TE)	22075	8.0	14.05	48.0	F	B
8178.601	IN-EX	405 II (4B), 1.9 TD	DHY (XUD9TE)	22076	8.0	14.05	48.0	F	B
8154.601	IN-EX	405 II (4B), 2.0 16V	RFT (XU10J4)	022119	7.0	12.07	40.0	F	B
8154.601	IN-EX	405 II (4B), 2.0 16V	RFT (XU10J4)	022120	7.0	12.07	40.0	F	B
8154.601	IN-EX	405 II (4B), 2.0 MI-16	RFY (XU10J4Z)	022119	7.0	12.07	40.0	F	B
8154.601	IN-EX	405 II (4B), 2.0 MI-16	RFY (XU10J4Z)	022120	7.0	12.07	40.0	F	B
8154.601	IN-EX	405 II (4B), 2.0 T 16 X4	RGZ (XU10J4TE/Z)	022119	7.0	12.07	40.0	F	B
8154.601	IN-EX	405 II (4B), 2.0 T 16 X4	RGZ (XU10J4TE/Z)	022120	7.0	12.07	40.0	F	B
8111.600	IN-EX	405 II 1.4	KDX (TU3MC)	22059	7.0	13.06	47.5	F	G
8111.600	IN-EX	405 II 1.4	TU3	22059	7.0	13.06	47.5	F	G
8134.601	IN-EX	405 II Break (4E), 1.6	BFZ (XU5JP)/BDY (XU5M2Z)	022072	8.0	13.07	45.0	F	B
8134.601	IN-EX	405 II Break (4E), 1.6	BFZ (XU5JP)/BDY (XU5M2Z)	022077	8.0	13.07	45.0	F	B
8131.600	IN-EX	405 II Break (4E), 1.6	BFZ (XU5JP)/BDY (XU5M2Z)	7701461009	8.0	13.07	45.0	F	G
8134.601	IN-EX	405 II Break (4E), 1.8	LFZ (XU7JP)	022072	8.0	13.07	45.0	F	B
8134.601	IN-EX	405 II Break (4E), 1.8	LFZ (XU7JP)	022077	8.0	13.07	45.0	F	B
8131.600	IN-EX	405 II Break (4E), 1.8	LFZ (XU7JP)	7701461009	8.0	13.07	45.0	F	G
8178.601	IN-EX	405 II Break (4E), 1.9 TD	DHW (XUD9SD)	22075	8.0	14.05	48.0	F	B
8178.601	IN-EX	405 II Break (4E), 1.9 TD	DHW (XUD9SD)	22076	8.0	14.05	48.0	F	B
8111.600	IN-EX	405 II Break 1.4	TU3	22059	7.0	13.06	47.5	F	G
8134.601	IN-EX	406 (8B), 1.6	BFZ (XU5JP)	022072	8.0	13.07	45.0	F	B
8134.601	IN-EX	406 (8B), 1.6	BFZ (XU5JP)	022077	8.0	13.07	45.0	F	B
8131.600	IN-EX	406 (8B), 1.6	BFZ (XU5JP)	7701461009	8.0	13.07	45.0	F	G
8134.601	IN-EX	406 (8B), 1.8	LFX (XU7JB)	022072	8.0	13.07	45.0	F	B
8134.601	IN-EX	406 (8B), 1.8	LFX (XU7JB)	022077	8.0	13.07	45.0	F	B
8131.600	IN-EX	406 (8B), 1.8	LFX (XU7JB)	7701461009	8.0	13.07	45.0	F	G
8127.905	IN-EX	406 (8B), 1.8 16V	6FZ (EW7J4)	022124	6.0	12.06	40.8	P	S06
8154.601	IN-EX	406 (8B), 1.8 16V	LFY (XU7JP4)	022119	7.0	12.07	40.0	F	B
8154.601	IN-EX	406 (8B), 1.8 16V	LFY (XU7JP4)	022120	7.0	12.07	40.0	F	B
8127.905	IN-EX	406 (8B), 1.8 16V	LFY (XU7JP4)	022124	6.0	12.06	40.8	P	S06
8178.601	IN-EX	406 (8B), 1.9 D	DHX (XUD9TE)	22075	8.0	14.05	48.0	F	B
8178.601	IN-EX	406 (8B), 1.9 D	DHX (XUD9TE)	22076	8.0	14.05	48.0	F	B
8178.601	IN-EX	406 (8B), 1.9 TD	DHW (XUD9SD)	22075	8.0	14.05	48.0	F	B
8178.601	IN-EX	406 (8B), 1.9 TD	DHW (XUD9SD)	22076	8.0	14.05	48.0	F	B
8178.601	IN-EX	406 (8B), 1.9 TD	DHY (XUD9TE)	22075	8.0	14.05	48.0	F	B
8178.601	IN-EX	406 (8B), 1.9 TD	DHY (XUD9TE)	22076	8.0	14.05	48.0	F	B
8127.905	IN-EX	406 (8B), 2.0 16V	RFN (EW10J4)	022124	6.0	12.06	40.8	P	S06
8127.905	IN-EX	406 (8B), 2.0 16V	RFR (DEW10J4)	022124	6.0	12.06	40.8	P	S06
8154.601	IN-EX	406 (8B), 2.0 16V	RFV (XU10J4R)	022119	7.0	12.07	40.0	F	B
8154.601	IN-EX	406 (8B), 2.0 16V	RFV (XU10J4R)	022120	7.0	12.07	40.0	F	B
8127.905	IN-EX	406 (8B), 2.0 16V HPi	RLZ (EW10D)	022124	6.0	12.06	40.8	P	S06
8127.905	IN-EX	406 (8B), 2.2	3FZ (EW12J4)	022124	6.0	12.06	40.8	P	S06
8134.601	IN-EX	406 Break (8E/F), 1.8	LFX (XU7JB)	022072	8.0	13.07	45.0	F	B
8134.601	IN-EX	406 Break (8E/F), 1.8	LFX (XU7JB)	022077	8.0	13.07	45.0	F	B
8131.600	IN-EX	406 Break (8E/F), 1.8	LFX (XU7JB)	7701461009	8.0	13.07	45.0	F	G
8127.905	IN-EX	406 Break (8E/F), 1.8 16V	6FZ (EW7J4)	022124	6.0	12.06	40.8	P	S06
8154.601	IN-EX	406 Break (8E/F), 1.8 16V	LFY (XU7JP4)	022119	7.0	12.07	40.0	F	B
8154.601	IN-EX	406 Break (8E/F), 1.8 16V	LFY (XU7JP4)	022120	7.0	12.07	40.0	F	B
8127.905	IN-EX	406 Break (8E/F), 1.8 16V	LFY (XU7JP4)	022124	6.0	12.06	40.8	P	S06
8178.601	IN-EX	406 Break (8E/F), 1.9 D	DHX (XUD9TE)	22075	8.0	14.05	48.0	F	B
8178.601	IN-EX	406 Break (8E/F), 1.9 D	DHX (XUD9TE)	22076	8.0	14.05	48.0	F	B
8178.601	IN-EX	406 Break (8E/F), 1.9 TD	DHX (XUD9TE)	22075	8.0	14.05	48.0	F	B

(D1) Internal diameter, (D2) External diameter, (B) Shape, (C) Material

VALVE GUIDES

PEUGEOT

IVT Ref.	Type	Model	Engine	OEM Ref.	D1	D2	Length	B	C
8178.601	IN-EX	406 Break (8E/F), 1.9 TD	DHX (XUD9TE)	22076	8.0	14.05	48.0	F	B
8127.905	IN-EX	406 Break (8E/F), 2.0 16V	RFN (EW10J4)	022124	6.0	12.06	40.8	P	S06
8127.905	IN-EX	406 Break (8E/F), 2.0 16V	RFR (DEW10J4)	022124	6.0	12.06	40.8	P	S06
8154.601	IN-EX	406 Break (8E/F), 2.0 16V	RFV (XU10J4R)	022119	7.0	12.07	40.0	F	B
8154.601	IN-EX	406 Break (8E/F), 2.0 16V	RFV (XU10J4R)	022120	7.0	12.07	40.0	F	B
8127.905	IN-EX	406 Break (8E/F), 2.0 16V HPi	RLZ (EW10D)	022124	6.0	12.06	40.8	P	S06
8127.905	IN-EX	406 Break (8E/F), 2.2	3FZ (EW12J4)	022124	6.0	12.06	40.8	P	S06
8127.905	IN-EX	406 Coupe (8C), 2.0 16V	RFR (DEW10J4)	022124	6.0	12.06	40.8	P	S06
8154.601	IN-EX	406 Coupe (8C), 2.0 16V	RFV (XU10J4R)	022119	7.0	12.07	40.0	F	B
8154.601	IN-EX	406 Coupe (8C), 2.0 16V	RFV (XU10J4R)	022120	7.0	12.07	40.0	F	B
8127.905	IN-EX	406 Coupe (8C), 2.0 16V	RFV (XU10J4R)/RFN (EW10	022124	6.0	12.06	40.8	P	S06
8127.905	IN-EX	406 Coupe (8C), 2.2	3FZ (EW12J4)	022124	6.0	12.06	40.8	P	S06
8204.100	IN-EX	407 (6D_), 1.6 HDi 110	9HZ (DV6TED4)		5.5	9.55	34.0	A	G1
8165.104	IN-EX	407 (6D_), 1.6 HDi 110	9HZ (DV6TED4)	0220A6	5.5	9.55	34.0	A	S03
8127.905	IN-EX	407 (6D_), 1.8	6FZ (EW7J4)	022124	6.0	12.06	40.8	P	S06
8127.905	IN-EX	407 (6D_), 2.0	RFN (EW10J4)	022124	6.0	12.06	40.8	P	S06
8127.905	IN-EX	407 (6D_), 2.2	3FZ (EW12J4)	022124	6.0	12.06	40.8	P	S06
8127.905	IN-EX	407 (6D_), 2.2 16V	3FY (EW12J4)	022124	6.0	12.06	40.8	P	S06
8006.105	IN-EX	407 2.2 HDi 170	4HT (DW12BTED4)	0220A2	6.0	10.06	41.5	A	S06
8006.105	IN-EX	407 2.2 HDi 170	4HT (DW12BTED4)	0220A2	6.0	10.06	41.5	A	S06
8006.105	IN-EX	407 2.2 HDi 170	4HT (DW12BTED4)	9640340380	6.0	10.06	41.5	A	S06
8006.105	IN-EX	407 2.2 HDi 170	4HT (DW12BTED4)	9640340380	6.0	10.06	41.5	A	S06
8127.905	IN-EX	407 Coupe (6C_), 2.2 16V	3FY (EW12J4)	022124	6.0	12.06	40.8	P	S06
8204.100	IN-EX	407 SW (6E_), 1.6 HDi 110	9HZ (DV6TED4)		5.5	9.55	34.0	A	G1
8165.104	IN-EX	407 SW (6E_), 1.6 HDi 110	9HZ (DV6TED4)	0220A6	5.5	9.55	34.0	A	S03
8127.905	IN-EX	407 SW (6E_), 1.8	6FZ (EW7J4)	022124	6.0	12.06	40.8	P	S06
8127.905	IN-EX	407 SW (6E_), 2.0	RFN (EW10J4)	022124	6.0	12.06	40.8	P	S06
8127.905	IN-EX	407 SW (6E_), 2.2	3FZ (EW12J4)	022124	6.0	12.06	40.8	P	S06
8127.905	IN-EX	407 SW (6E_), 2.2 16V	3FY (EW12J4)	022124	6.0	12.06	40.8	P	S06
8006.105	IN-EX	407 SW 2.2 HDi 170	4HT (DW12BTED4)	0220A2	6.0	10.06	41.5	A	S06
8006.105	IN-EX	407 SW 2.2 HDi 170	4HT (DW12BTED4)	0220A2	6.0	10.06	41.5	A	S06
8006.105	IN-EX	407 SW 2.2 HDi 170	4HT (DW12BTED4)	9640340380	6.0	10.06	41.5	A	S06
8006.105	IN-EX	407 SW 2.2 HDi 170	4HT (DW12BTED4)	9640340380	6.0	10.06	41.5	A	S06
8194.101	EX	5008, 1.6 16V	5FS (EP6C)/EP6/5FW (EP6)		5.0	9.05	44.5	A	B
8193.101	IN	5008, 1.6 16V	5FS (EP6C)/EP6/5FW (EP6)		5.0	9.05	42.0	A	B
8193.101	IN	5008, 1.6 16V	EP6CDT		5.0	9.05	42.0	A	B
8194.101	EX	5008, 1.6 16V	EP6CDT		5.0	9.05	44.5	A	B
8204.100	IN-EX	5008, 1.6 HDi	9HR (DV6C)		5.5	9.55	34.0	A	G1
8165.104	IN-EX	5008, 1.6 HDi	9HR (DV6C)	0220A6	5.5	9.55	34.0	A	S03
8204.100	IN-EX	5008, 1.6 HDi	9HZ (DV6TED4)		5.5	9.55	34.0	A	G1
8180.100	IN-EX	504 (A_, M_), 1.9 D (M20)	XD4x88	22016	8.5	14.05	55.0	A	G
8180.100	IN-EX	504 (A_, M_), 2.1 D	-	22016	8.5	14.05	55.0	A	G
8180.100	IN-EX	504 (A_, M_), 2.1 D (A20, M20)	XD4x90	22016	8.5	14.05	55.0	A	G
8180.100	IN-EX	504 (A_, M_), 2.3 D (A40, A45)	134 (XD2)	22016	8.5	14.05	55.0	A	G
8180.100	IN-EX	504 Break (D_, F_), 2.3 D (D40, F	134 (XD2)	22016	8.5	14.05	55.0	A	G
8180.100	IN-EX	504 Pick-up (E_), 1.9 D	XD4x88	22016	8.5	14.05	55.0	A	G
8180.100	IN-EX	504 Pick-up (E_), 2.3 D	134 (XD2)	22016	8.5	14.05	55.0	A	G
8133.600	IN-EX	505 (551A), 2.2 Turbo Injection	176W (N9TEA)	12204PLZD00	6.0	11.05	42.0	F	G1
8180.100	IN-EX	505 (551A), 2.3 Turbo Diesel	147 (XD2S)	22016	8.5	14.05	55.0	A	G
8180.100	IN-EX	505 (551A), 2.5 Diesel	155 (XD3)	22016	8.5	14.05	55.0	A	G
8180.100	IN-EX	505 (551A), 2.5 Diesel	155 (XD3)	22016	8.5	14.05	55.0	A	G
8180.100	IN-EX	505 (551A), 2.5 Turbo Diesel	152A (XD3T)	22016	8.5	14.05	55.0	A	G
8180.100	IN-EX	505 (551A), 2.5 Turbo Diesel	152B (XD3TE)	22016	8.5	14.05	55.0	A	G
8180.100	IN-EX	505 (551A), 2.5 Turbo Diesel	XD3T	22016	8.5	14.05	55.0	A	G
8180.100	IN-EX	505 Break (551D), 2.3 D	XD2	22016	8.5	14.05	55.0	A	G
8180.100	IN-EX	505 Break (551D), 2.3 Diesel	147 (XD2S)	22016	8.5	14.05	55.0	A	G
8180.100	IN-EX	505 Break (551D), 2.5 Diesel	155 (XD3)	22016	8.5	14.05	55.0	A	G
8180.100	IN-EX	505 Break (551D), 2.5 Diesel	155 (XD3)	22016	8.5	14.05	55.0	A	G
8180.100	IN-EX	505 Break (551D), 2.5 Turbo Dies	152A (XD3T)	22016	8.5	14.05	55.0	A	G
8180.100	IN-EX	505 Break (551D), 2.5 Turbo Dies	152B (XD3TE)	22016	8.5	14.05	55.0	A	G
8204.100	IN-EX	508 SW, 1.6 HDi	9HR (DV6C)		5.5	9.55	34.0	A	G1
8165.104	IN-EX	508 SW, 1.6 HDi	9HR (DV6C)	0220A6	5.5	9.55	34.0	A	S03

(D1) Internal diameter, (D2) External diameter, (B) Shape, (C) Material

VALVE GUIDES

PEUGEOT

IVT Ref.	Type	Model	Engine	OEM Ref.	D1	D2	Length	B	C
8194.101	EX	508 SW, 1.6 THP	EP6CDT		5.0	9.05	44.5	A	B
8193.101	IN	508 SW, 1.6 THP	EP6CDT		5.0	9.05	42.0	A	B
8204.100	IN-EX	508, 1.6 HDi	9HR (DV6C)		5.5	9.55	34.0	A	G1
8165.104	IN-EX	508, 1.6 HDi	9HR (DV6C)	0220A6	5.5	9.55	34.0	A	S03
8194.101	EX	508, 1.6 THP	EP6CDT		5.0	9.05	44.5	A	B
8193.101	IN	508, 1.6 THP	EP6CDT		5.0	9.05	42.0	A	B
8180.100	IN-EX	604 (561A_), 2.3 TD	147 (XD2S)	22016	8.5	14.05	55.0	A	G
8180.100	IN-EX	604 (561A_), 2.5 TD	152A (XD3T)	22016	8.5	14.05	55.0	A	G
8154.601	IN-EX	605 (6B), 2.0 16V	RFV (XU10J4R)	022119	7.0	12.07	40.0	F	B
8154.601	IN-EX	605 (6B), 2.0 16V	RFV (XU10J4R)	022120	7.0	12.07	40.0	F	B
8134.601	IN-EX	605 (6B), 3.0	UFZ (ZPJ)	022072	8.0	13.07	45.0	F	B
8134.601	IN-EX	605 (6B), 3.0	UFZ (ZPJ)	022077	8.0	13.07	45.0	F	B
8127.905	IN-EX	607 (9D, 9U), 2.0	RFN (EW10J4)	022124	6.0	12.06	40.8	P	S06
8127.905	IN-EX	607 (9D, 9U), 2.2 16V	3FY (EW12J4)	022124	6.0	12.06	40.8	P	S06
8127.905	IN-EX	607 (9D, 9U), 2.2 16V	3FZ (EW12J4)	022124	6.0	12.06	40.8	P	S06
8006.105	IN-EX	607 2.2 HDi	4HT (DW12BTED4)	0220A2	6.0	10.06	41.5	A	S06
8006.105	IN-EX	607 2.2 HDi	4HT (DW12BTED4)	0220A2	6.0	10.06	41.5	A	S06
8006.105	IN-EX	607 2.2 HDi	4HT (DW12BTED4)	9640340380	6.0	10.06	41.5	A	S06
8006.105	IN-EX	607 2.2 HDi	4HT (DW12BTED4)	9640340380	6.0	10.06	41.5	A	S06
8134.601	IN-EX	806 (221), 1.8	LFW (XU7JP)	022072	8.0	13.07	45.0	F	B
8134.601	IN-EX	806 (221), 1.8	LFW (XU7JP)	022077	8.0	13.07	45.0	F	B
8131.600	IN-EX	806 (221), 1.8	LFW (XU7JP)	7701461009	8.0	13.07	45.0	F	G
8178.601	IN-EX	806 (221), 1.9 TD	D9B (XUD9AU)	22075	8.0	14.05	48.0	F	B
8178.601	IN-EX	806 (221), 1.9 TD	D9B (XUD9AU)	22076	8.0	14.05	48.0	F	B
8178.601	IN-EX	806 (221), 1.9 TD	DHY (XUD9TE)	22075	8.0	14.05	48.0	F	B
8178.601	IN-EX	806 (221), 1.9 TD	DHY (XUD9TE)	22076	8.0	14.05	48.0	F	B
8127.905	IN-EX	806 (221), 2.0 16V	RFN (EW10J4)	022124	6.0	12.06	40.8	P	S06
8154.601	IN-EX	806 (221), 2.0 16V	RFV (XU10J4R)	022119	7.0	12.07	40.0	F	B
8154.601	IN-EX	806 (221), 2.0 16V	RFV (XU10J4R)	022120	7.0	12.07	40.0	F	B
8127.905	IN-EX	807 (E), 2.0	RFN (EW10J4)	022124	6.0	12.06	40.8	P	S06
8127.905	IN-EX	807 (E), 2.2	3FZ (EW12J4)	022124	6.0	12.06	40.8	P	S06
8006.105	IN-EX	807 2.2 HDi	4HT (DW12BTED4)	0220A2	6.0	10.06	41.5	A	S06
8006.105	IN-EX	807 2.2 HDi	4HT (DW12BTED4)	0220A2	6.0	10.06	41.5	A	S06
8006.105	IN-EX	807 2.2 HDi	4HT (DW12BTED4)	9640340380	6.0	10.06	41.5	A	S06
8006.105	IN-EX	807 2.2 HDi	4HT (DW12BTED4)	9640340380	6.0	10.06	41.5	A	S06
8204.100	IN-EX	AYGO (WNB1_, KGB1_), 1.4 HDi	2WZ-TV		5.5	9.55	34.0	A	G1
8204.100	IN-EX	BERLINGO (B9), 1.6 HDi 110	9HR (DV6C)/9HL (DV6C)		5.5	9.55	34.0	A	G1
8204.100	IN-EX	BERLINGO (B9), 1.6 HDi 110	9HZ (DV6TED4)		5.5	9.55	34.0	A	G1
8204.100	IN-EX	BERLINGO (MF), 1.6 HDI 75 (MF	9HW (DV6BTED4)/DV6B		5.5	9.55	34.0	A	G1
8204.100	IN-EX	BERLINGO (MF), 1.6 HDI 90 (MF	9HX (DV6ATED4)		5.5	9.55	34.0	A	G1
8204.100	IN-EX	BERLINGO Kasten (B9), 1.6 HDi	9HR (DV6C)/9HL (DV6C)		5.5	9.55	34.0	A	G1
8204.100	IN-EX	BERLINGO Kasten (B9), 1.6 HDi	9HZ (DV6TED4)		5.5	9.55	34.0	A	G1
8204.100	IN-EX	BERLINGO Kasten (B9), 1.6 HDi	9HT (DV6BUTED4)		5.5	9.55	34.0	A	G1
8204.100	IN-EX	BERLINGO Kasten (B9), 1.6 HDi	9HP (DV6DTED)		5.5	9.55	34.0	A	G1
8204.100	IN-EX	BERLINGO Kasten (B9), 1.6 HDi	9HX (DV6ATED4)/9HS (DV6		5.5	9.55	34.0	A	G1
8204.100	IN-EX	BERLINGO Kasten (M_), 1.6 HDI	9HW (DV6BTED4)/DV6B		5.5	9.55	34.0	A	G1
8204.100	IN-EX	BERLINGO Kasten (M_), 1.6 HDI	9HX (DV6ATED4)		5.5	9.55	34.0	A	G1
8204.100	IN-EX	BERLINGO Pritsche/Fahrgestell (	9HX (DV6ATED4)		5.5	9.55	34.0	A	G1
8159.601	IN-EX	BIPPER (AA_), 1.4	KFV (TU3A)	22060	7.0	13.06	47.6	F	B
8204.100	IN-EX	BIPPER (AA_), 1.4 HDi	8HS (DV4TED)		5.5	9.55	34.0	A	G1
8165.104	IN-EX	BIPPER (AA_), 1.4 HDi	8HS (DV4TED)	0220A6	5.5	9.55	34.0	A	S03
8111.600	IN-EX	Bipper 1.4	KFV (TU3A)	22059	7.0	13.06	47.5	F	G
8111.600	IN-EX	Bipper 1.4 Tepee	KFV (TU3A)	22059	7.0	13.06	47.5	F	G
8159.601	IN-EX	BIPPER Tepee, 1.4	KFV (TU3A)	22060	7.0	13.06	47.6	F	B
8204.100	IN-EX	BIPPER Tepee, 1.4 HDi	8HS (DV4TED)		5.5	9.55	34.0	A	G1
8165.104	IN-EX	BIPPER Tepee, 1.4 HDi	8HS (DV4TED)	0220A6	5.5	9.55	34.0	A	S03
8095.600	IN-EX	Boxer 2.8 HDi	8140.43S (F28DTCR)	4749395	8.0	13.03	56.0	F	G1
8095.600	IN-EX	Boxer 2.8 HDi 4x4	8140.43S (F28DTCR)	4749395	8.0	13.03	56.0	F	G1
8095.600	IN-EX	Boxer Autobus 2.8 HDi	8140.43S (F28DTCR)	4749395	8.0	13.03	56.0	F	G1
8095.600	IN-EX	Boxer Autobus 2.8 HDi 4x4	8140.43S (F28DTCR)	4749395	8.0	13.03	56.0	F	G1
8178.601	IN-EX	BOXER Bus (230P), 1.9 TD	D8C (XUD9UTF)	22075	8.0	14.05	48.0	F	B
8178.601	IN-EX	BOXER Bus (230P), 1.9 TD	D8C (XUD9UTF)	22075	8.0	14.05	48.0	F	B

(D1) Internal diameter, (D2) External diameter, (B) Shape, (C) Material

VALVE GUIDES

PEUGEOT

IVT Ref.	Type	Model	Engine	OEM Ref.	D1	D2	Length	B	C
8178.601	IN-EX	BOXER Bus (230P), 1.9 TD	D8C (XUD9UTF)	22076	8.0	14.05	48.0	F	B
8178.601	IN-EX	BOXER Bus (230P), 1.9 TD	D8C (XUD9UTF)	22076	8.0	14.05	48.0	F	B
8178.601	IN-EX	BOXER Bus (230P), 1.9 TD 4x4	DJY (XUD9A)	22075	8.0	14.05	48.0	F	B
8178.601	IN-EX	BOXER Bus (230P), 1.9 TD 4x4	DJY (XUD9A)	22076	8.0	14.05	48.0	F	B
8134.601	IN-EX	BOXER Bus (244, Z_), 2.0	RFL (XU10J2U)	022072	8.0	13.07	45.0	F	B
8134.601	IN-EX	BOXER Bus (244, Z_), 2.0	RFL (XU10J2U)	022077	8.0	13.07	45.0	F	B
8047.103	IN-EX	BOXER Bus, 2.2 HDi 130	4HH (P22DTE)	94290	6.0	10.03	49.0	A	S01
8047.103	IN-EX	BOXER Bus, 3.0 HDi 145	-	94290	6.0	10.03	49.0	A	S01
8047.103	IN-EX	BOXER Bus, 3.0 HDi 160	F1CE0481D (F30DT)	94290	6.0	10.03	49.0	A	S01
8047.103	IN-EX	BOXER Bus, 3.0 HDi 175	F1CE0481D (F30DT)	94290	6.0	10.03	49.0	A	S01
8095.600	IN-EX	Boxer Furgonato 2.8 HDi	8140.43S (F28DTCR)	4749395	8.0	13.03	56.0	F	G1
8095.600	IN-EX	Boxer Furgonato 2.8 HDi 4x4	8140.43S (F28DTCR)	4749395	8.0	13.03	56.0	F	G1
8178.601	IN-EX	BOXER Kasten (230L), 1.9 D	XUD9TE	22075	8.0	14.05	48.0	F	B
8178.601	IN-EX	BOXER Kasten (230L), 1.9 D	XUD9TE	22076	8.0	14.05	48.0	F	B
8178.601	IN-EX	BOXER Kasten (230L), 1.9 TD	D8C (XUD9UTF)	22075	8.0	14.05	48.0	F	B
8178.601	IN-EX	BOXER Kasten (230L), 1.9 TD	D8C (XUD9UTF)	22076	8.0	14.05	48.0	F	B
8178.601	IN-EX	BOXER Kasten (230L), 1.9 TD	DHY (XUD9TE)	22075	8.0	14.05	48.0	F	B
8178.601	IN-EX	BOXER Kasten (230L), 1.9 TD	DHY (XUD9TE)	22076	8.0	14.05	48.0	F	B
8134.601	IN-EX	BOXER Kasten (244), 2.0	RFL (XU10J2U)	022072	8.0	13.07	45.0	F	B
8134.601	IN-EX	BOXER Kasten (244), 2.0	RFL (XU10J2U)	022077	8.0	13.07	45.0	F	B
8047.103	IN-EX	BOXER Kasten, 2.2 HDi 130	4HH (P22DTE)	94290	6.0	10.03	49.0	A	S01
8047.103	IN-EX	BOXER Kasten, 3.0 HDi	F1CE0481D (F30DT)	94290	6.0	10.03	49.0	A	S01
8047.103	IN-EX	BOXER Kasten, 3.0 HDi 145	-	94290	6.0	10.03	49.0	A	S01
8047.103	IN-EX	BOXER Kasten, 3.0 HDi 160	F1CE0481D (F30DT)	94290	6.0	10.03	49.0	A	S01
8047.103	IN-EX	BOXER Kasten, 3.0 HDi 175	F1CE0481D (F30DT)	94290	6.0	10.03	49.0	A	S01
8178.601	IN-EX	BOXER Pritsche/Fahrgestell (ZCT	D8C (XUD9UTF)	22075	8.0	14.05	48.0	F	B
8178.601	IN-EX	BOXER Pritsche/Fahrgestell (ZCT	D8C (XUD9UTF)	22076	8.0	14.05	48.0	F	B
8178.601	IN-EX	BOXER Pritsche/Fahrgestell (ZCT	D9B (XUD9A)	22075	8.0	14.05	48.0	F	B
8178.601	IN-EX	BOXER Pritsche/Fahrgestell (ZCT	D9B (XUD9A)	22076	8.0	14.05	48.0	F	B
8134.601	IN-EX	BOXER Pritsche/Fahrgestell (ZCT	RFL (XU10J2U)	022072	8.0	13.07	45.0	F	B
8134.601	IN-EX	BOXER Pritsche/Fahrgestell (ZCT	RFL (XU10J2U)	022077	8.0	13.07	45.0	F	B
8047.103	IN-EX	BOXER Pritsche/Fahrgestell, 2.2	4HH (P22DTE)	94290	6.0	10.03	49.0	A	S01
8047.103	IN-EX	BOXER Pritsche/Fahrgestell, 3.0	F1CE0481D (F30DT)	94290	6.0	10.03	49.0	A	S01
8047.103	IN-EX	BOXER Pritsche/Fahrgestell, 3.0	-	94290	6.0	10.03	49.0	A	S01
8047.103	IN-EX	BOXER Pritsche/Fahrgestell, 3.0	F1CE0481D (F30DT)	94290	6.0	10.03	49.0	A	S01
8047.103	IN-EX	BOXER Pritsche/Fahrgestell, 3.0	F1CE0481D (F30DT)	94290	6.0	10.03	49.0	A	S01
8204.100	IN-EX	C1 (PM_, PN_), 1.4 HDi	8HT (DV4TD)		5.5	9.55	34.0	A	G1
8204.100	IN-EX	C2 (JM_), 1.4 HDi	8HZ (DV4TD)/8HX (DV4TD)		5.5	9.55	34.0	A	G1
8204.100	IN-EX	C2 (JM_), 1.6 HDi	9HZ (DV6TED4)		5.5	9.55	34.0	A	G1
8204.100	IN-EX	C3 I (FC_), 1.4 16V HDi	8HY (DV4TED4)		5.5	9.55	34.0	A	G1
8204.100	IN-EX	C3 I (FC_), 1.4 HDi	8HX (DV4TD)		5.5	9.55	34.0	A	G1
8204.100	IN-EX	C3 I (FC_), 1.6 16V HDi	9HX (DV6ATED4)		5.5	9.55	34.0	A	G1
8204.100	IN-EX	C3 I (FC_), 1.6 16V HDi	9HZ (DV6TED4)		5.5	9.55	34.0	A	G1
8204.100	IN-EX	C3 II, 1.4 HDi 70	8HR (DV4C)/8HZ (DV4TD)		5.5	9.55	34.0	A	G1
8204.100	IN-EX	C3 II, 1.6 HDi	9HP (DV6DTED)		5.5	9.55	34.0	A	G1
8204.100	IN-EX	C3 II, 1.6 HDi 110	9HR (DV6C)		5.5	9.55	34.0	A	G1
8204.100	IN-EX	C3 II, 1.6 HDi 90	9HX (DV6ATED4)		5.5	9.55	34.0	A	G1
8204.100	IN-EX	C3 Picasso, 1.6 HDi	9HX (DV6ATED4)		5.5	9.55	34.0	A	G1
8204.100	IN-EX	C3 Picasso, 1.6 HDi	9HZ (DV6TED4)		5.5	9.55	34.0	A	G1
8204.100	IN-EX	C3 Picasso, 1.6 HDi 110	9HR (DV6C)		5.5	9.55	34.0	A	G1
8204.100	IN-EX	C3 Picasso, 1.6 HDI 90	9HP (DV6DTED)		5.5	9.55	34.0	A	G1
8204.100	IN-EX	C3 Pluriel (HB_), 1.4 HDi	8HX (DV4TD)		5.5	9.55	34.0	A	G1
8204.100	IN-EX	C30, 1.6 D	D 4164 T		5.5	9.55	34.0	A	G1
8204.100	IN-EX	C4 Coupe (LA_), 1.6 HDi	9HX (DV6ATED4)		5.5	9.55	34.0	A	G1
8204.100	IN-EX	C4 Coupe (LA_), 1.6 HDi	9HY (DV6TED4)/9HZ (DV6T		5.5	9.55	34.0	A	G1
8204.100	IN-EX	C4 Grand Picasso I (UA_), 1.6 HD	9HY (DV6TED4)/9HZ (DV6T		5.5	9.55	34.0	A	G1
8204.100	IN-EX	C4 Grand Picasso I (UA_), 1.6 HD	9HR (DV6C)/9HL (DV6C)		5.5	9.55	34.0	A	G1
8204.100	IN-EX	C4 I (LC_), 1.6 HDi	9HX (DV6ATED4)		5.5	9.55	34.0	A	G1
8204.100	IN-EX	C4 I (LC_), 1.6 HDi	9HY (DV6TED4)/9HZ (DV6T		5.5	9.55	34.0	A	G1
8204.100	IN-EX	C4 II (B7), 1.6 HDi 110	9HR (DV6C)		5.5	9.55	34.0	A	G1
8204.100	IN-EX	C4 II (B7), 1.6 HDi 90	9HP (DV6DTED)		5.5	9.55	34.0	A	G1
8204.100	IN-EX	C4 Picasso I (UD_), 1.6 HDi	9HY (DV6TED4)/9HZ (DV6T		5.5	9.55	34.0	A	G1

(D1) Internal diameter, (D2) External diameter, (B) Shape, (C) Material

VALVE GUIDES

PEUGEOT

IVT Ref.	Type	Model	Engine	OEM Ref.	D1	D2	Length	B	C
8204.100	IN-EX	C4 Picasso I (UD_), 1.6 HDi 110	9HR (DV6C)		5.5	9.55	34.0	A	G1
8204.100	IN-EX	C5 II (RC_), 1.6 HDi (RC8HZB)	9HY (DV6TED4)/9HZ (DV6T		5.5	9.55	34.0	A	G1
8204.100	IN-EX	C5 II Break (RE_), 1.6 HDi (RE8H	9HY (DV6TED4)/9HZ (DV6T		5.5	9.55	34.0	A	G1
8204.100	IN-EX	C5 III (RD_), 1.6 HDi	9HZ (DV6TED4)		5.5	9.55	34.0	A	G1
8204.100	IN-EX	C5 III (RD_), 1.6 HDi 110	9HR (DV6C)/9HL (DV6C)		5.5	9.55	34.0	A	G1
8204.100	IN-EX	C5 III Break (TD_), 1.6 HDi	9HZ (DV6TED4)		5.5	9.55	34.0	A	G1
8204.100	IN-EX	C5 III Break (TD_), 1.6 HDi 110	9HR (DV6C)/9HL (DV6C)		5.5	9.55	34.0	A	G1
8204.100	IN-EX	C-MAX (DM2), 1.6 TDCi	G8DA/G8DB/G8DD		5.5	9.55	34.0	A	G1
8204.100	IN-EX	C-MAX (DM2), 1.6 TDCi	G8DC/MTDA		5.5	9.55	34.0	A	G1
8204.100	IN-EX	C-MAX (DM2), 1.6 TDCi	HHDA/HHDB/GPDA		5.5	9.55	34.0	A	G1
8204.100	IN-EX	C-MAX II (DXA/CB7, DXA/CEU),	T1DB/T1DA		5.5	9.55	34.0	A	G1
8204.100	IN-EX	C-MAX II (DXA/CB7, DXA/CEU),	T3DA/T3DB		5.5	9.55	34.0	A	G1
8204.100	IN-EX	DS3 Cabriolet, 1.6 HDi 90	9HP (DV6DTED)		5.5	9.55	34.0	A	G1
8204.100	IN-EX	DS3, 1.4 HDi 70	8HR (DV4C)		5.5	9.55	34.0	A	G1
8204.100	IN-EX	DS3, 1.6 HDi 110	9HR (DV6C)		5.5	9.55	34.0	A	G1
8204.100	IN-EX	DS3, 1.6 HDi 90	9HP (DV6DTED)		5.5	9.55	34.0	A	G1
8204.100	IN-EX	DS4, 1.6 HDi 110	-		5.5	9.55	34.0	A	G1
8204.100	IN-EX	DS4, 1.6 HDi 110	9HR (DV6C)		5.5	9.55	34.0	A	G1
8204.100	IN-EX	DS5, 1.6 HDi 110	9HR (DV6C)		5.5	9.55	34.0	A	G1
8134.601	IN-EX	EXPERT (224), 1.8	LFZ (XU7JP)	022072	8.0	13.07	45.0	F	B
8134.601	IN-EX	EXPERT (224), 1.8	LFZ (XU7JP)	022077	8.0	13.07	45.0	F	B
8131.600	IN-EX	EXPERT (224), 1.8	LFZ (XU7JP)	7701461009	8.0	13.07	45.0	F	G
8178.601	IN-EX	EXPERT (224), 1.9 D	DHX (XUD9TE)	22075	8.0	14.05	48.0	F	B
8178.601	IN-EX	EXPERT (224), 1.9 D	DHX (XUD9TE)	22076	8.0	14.05	48.0	F	B
8178.601	IN-EX	EXPERT (224), 1.9 TD	D8B (XUD9TE)	22075	8.0	14.05	48.0	F	B
8178.601	IN-EX	EXPERT (224), 1.9 TD	D8B (XUD9TE)	22076	8.0	14.05	48.0	F	B
8178.601	IN-EX	EXPERT (224), 1.9 TD	D9B (XUD9AU)	22075	8.0	14.05	48.0	F	B
8178.601	IN-EX	EXPERT (224), 1.9 TD	D9B (XUD9AU)	22076	8.0	14.05	48.0	F	B
8127.905	IN-EX	EXPERT (224), 2.0	RFN (EW10J4)	022124	6.0	12.06	40.8	P	S06
8134.601	IN-EX	EXPERT Kasten (222), 1.8	LFZ (XU7JP)	022072	8.0	13.07	45.0	F	B
8134.601	IN-EX	EXPERT Kasten (222), 1.8	LFZ (XU7JP)	022077	8.0	13.07	45.0	F	B
8131.600	IN-EX	EXPERT Kasten (222), 1.8	LFZ (XU7JP)	7701461009	8.0	13.07	45.0	F	G
8178.601	IN-EX	EXPERT Kasten (222), 1.9 D	DHX (XUD9TE)	22075	8.0	14.05	48.0	F	B
8178.601	IN-EX	EXPERT Kasten (222), 1.9 D	DHX (XUD9TE)	22076	8.0	14.05	48.0	F	B
8178.601	IN-EX	EXPERT Kasten (222), 1.9 TD	D8B (XUD9TE)	22075	8.0	14.05	48.0	F	B
8178.601	IN-EX	EXPERT Kasten (222), 1.9 TD	D8B (XUD9TE)	22076	8.0	14.05	48.0	F	B
8178.601	IN-EX	EXPERT Kasten (222), 1.9 TD	D9B (XUD9AU)	22075	8.0	14.05	48.0	F	B
8178.601	IN-EX	EXPERT Kasten (222), 1.9 TD	D9B (XUD9AU)	22076	8.0	14.05	48.0	F	B
8127.905	IN-EX	EXPERT Kasten (222), 2.0	RFN (EW10J4)	022124	6.0	12.06	40.8	P	S06
8178.601	IN-EX	EXPERT Pritsche/Fahrgestell (22	DHX (XUD9TE)	22075	8.0	14.05	48.0	F	B
8178.601	IN-EX	EXPERT Pritsche/Fahrgestell (22	DHX (XUD9TE)	22076	8.0	14.05	48.0	F	B
8178.601	IN-EX	EXPERT Pritsche/Fahrgestell (22	D8B (XUD9TE)	22075	8.0	14.05	48.0	F	B
8178.601	IN-EX	EXPERT Pritsche/Fahrgestell (22	D8B (XUD9TE)	22076	8.0	14.05	48.0	F	B
8178.601	IN-EX	EXPERT Pritsche/Fahrgestell (22	DJY (XUD9A)	22075	8.0	14.05	48.0	F	B
8178.601	IN-EX	EXPERT Pritsche/Fahrgestell (22	DJY (XUD9A)	22076	8.0	14.05	48.0	F	B
8204.100	IN-EX	FIESTA V (JH_, JD_), 1.4 TDCi	F6JA/F6JB		5.5	9.55	34.0	A	G1
8204.100	IN-EX	FIESTA V (JH_, JD_), 1.6 TDCi	HHJA/HHJB		5.5	9.55	34.0	A	G1
8204.100	IN-EX	FIESTA V Van, 1.4 TDCi	F6JA/F6JB		5.5	9.55	34.0	A	G1
8204.100	IN-EX	FIESTA VI Van, 1.4 TDCi	F6JB		5.5	9.55	34.0	A	G1
8204.100	IN-EX	FIESTA VI Van, 1.4 TDCi	KVJA/F6JD		5.5	9.55	34.0	A	G1
8204.100	IN-EX	FIESTA VI, 1.6 TDCi	HHJC/HHJD/HHJE		5.5	9.55	34.0	A	G1
8204.100	IN-EX	FIESTA VI, 1.6 TDCi	TZJB/TZJA/T3JA		5.5	9.55	34.0	A	G1
8204.100	IN-EX	FIESTA VI, 1.6 TDCi	UBJA/HHJF		5.5	9.55	34.0	A	G1
8204.100	IN-EX	FOCUS C-MAX, 1.6 TDCi	G8DA/G8DB		5.5	9.55	34.0	A	G1
8204.100	IN-EX	FOCUS C-MAX, 1.6 TDCi	HHDA/HHDB		5.5	9.55	34.0	A	G1
8204.100	IN-EX	FOCUS II (DA_), 1.6 TDCi	G8DA/G8DB/G8DE/G8DD/G		5.5	9.55	34.0	A	G1
8204.100	IN-EX	FOCUS II (DA_), 1.6 TDCi	GPDC/HHDA/GPDB/HHDB/		5.5	9.55	34.0	A	G1
8204.100	IN-EX	FOCUS II Kombi (DA_), 1.6 TDCi	G8DA/G8DB/G8DE/G8DD/G		5.5	9.55	34.0	A	G1
8204.100	IN-EX	FOCUS II Kombi (DA_), 1.6 TDCi	GPDC/HHDA/HHDB/GPDA		5.5	9.55	34.0	A	G1
8204.100	IN-EX	FOCUS II Stufenheck (DA_), 1.6 T	G8DA/G8DB/G8DE/G8DD/G		5.5	9.55	34.0	A	G1
8204.100	IN-EX	FOCUS II Stufenheck (DA_), 1.6 T	HHDA/HHDB		5.5	9.55	34.0	A	G1
8204.100	IN-EX	FOCUS III Stufenheck, 1.6 TDCi	T1DB/T1DA		5.5	9.55	34.0	A	G1

(D1) Internal diameter, (D2) External diameter, (B) Shape, (C) Material

VALVE GUIDES

PEUGEOT

IVT Ref.	Type	Model	Engine	OEM Ref.	D1	D2	Length	B	C
8204.100	IN-EX	FOCUS III Stufenheck, 1.6 TDCi	T3DA/T3DB		5.5	9.55	34.0	A	G1
8204.100	IN-EX	FOCUS III Turnier, 1.6 TDCi	T1DB/T1DA		5.5	9.55	34.0	A	G1
8204.100	IN-EX	FOCUS III Turnier, 1.6 TDCi	T3DA/T3DB		5.5	9.55	34.0	A	G1
8204.100	IN-EX	FOCUS III, 1.6 TDCi	T1DB/T1DA		5.5	9.55	34.0	A	G1
8204.100	IN-EX	FOCUS III, 1.6 TDCi	T3DA/T3DB		5.5	9.55	34.0	A	G1
8204.100	IN-EX	FUSION (JU_), 1.4 TDCi	F6JA/F6JB		5.5	9.55	34.0	A	G1
8204.100	IN-EX	FUSION (JU_), 1.6 TDCi	HHJA/HHJB		5.5	9.55	34.0	A	G1
8204.100	IN-EX	GRAND C-MAX (DXA/CB7, DXA/	T1DB/T1DA		5.5	9.55	34.0	A	G1
8204.100	IN-EX	GRAND C-MAX (DXA/CB7, DXA/	T3DA/T3DB		5.5	9.55	34.0	A	G1
8178.601	IN-EX	J5 Bus (290P), 1.9 D	D9B (XUD9A)	22075	8.0	14.05	48.0	F	B
8178.601	IN-EX	J5 Bus (290P), 1.9 D	D9B (XUD9A)	22076	8.0	14.05	48.0	F	B
8178.601	IN-EX	J5 Kasten (290L), 1.9 D	D9B (XUD9A)	22075	8.0	14.05	48.0	F	B
8178.601	IN-EX	J5 Kasten (290L), 1.9 D	D9B (XUD9A)	22076	8.0	14.05	48.0	F	B
8178.601	IN-EX	J5 Pritsche/Fahrgestell (290L), 1.9	XUD 7TE	22075	8.0	14.05	48.0	F	B
8178.601	IN-EX	J5 Pritsche/Fahrgestell (290L), 1.9	XUD 7TE	22076	8.0	14.05	48.0	F	B
8180.100	IN-EX	J7 Bus, 1.9 D	XDP88	22016	8.5	14.05	55.0	A	G
8180.100	IN-EX	J7 Bus, 2.1 D	XDP90	22016	8.5	14.05	55.0	A	G
8180.100	IN-EX	J7 Bus, 2.3 D	XD2P94	22016	8.5	14.05	55.0	A	G
8180.100	IN-EX	J7 Kasten, 1.9 D	XDP88	22016	8.5	14.05	55.0	A	G
8180.100	IN-EX	J7 Kasten, 2.1 D	XDP90	22016	8.5	14.05	55.0	A	G
8180.100	IN-EX	J7 Kasten, 2.3 D	XD2P94	22016	8.5	14.05	55.0	A	G
8180.100	IN-EX	J7 Pritsche/Fahrgestell, 1.9 D	XDP88	22016	8.5	14.05	55.0	A	G
8180.100	IN-EX	J7 Pritsche/Fahrgestell, 2.1 D	XDP90	22016	8.5	14.05	55.0	A	G
8180.100	IN-EX	J7 Pritsche/Fahrgestell, 2.3 D	XD2P94	22016	8.5	14.05	55.0	A	G
8180.100	IN-EX	J9 Bus, 2.3 D	XD2PX94	22016	8.5	14.05	55.0	A	G
8180.100	IN-EX	J9 Bus, 2.5 D	XD3P	22016	8.5	14.05	55.0	A	G
8180.100	IN-EX	J9 Kasten, 2.1 D	XDPX90	22016	8.5	14.05	55.0	A	G
8180.100	IN-EX	J9 Kasten, 2.3 D	XD2PX94	22016	8.5	14.05	55.0	A	G
8180.100	IN-EX	J9 Kasten, 2.5 D	XD3P	22016	8.5	14.05	55.0	A	G
8180.100	IN-EX	J9 Pritsche/Fahrgestell, 2.3 D	XD2PX94	22016	8.5	14.05	55.0	A	G
8180.100	IN-EX	J9 Pritsche/Fahrgestell, 2.5 D	XD3P	22016	8.5	14.05	55.0	A	G
8204.100	IN-EX	LIANA (ER), 1.4 DDiS	8HY		5.5	9.55	34.0	A	G1
8204.100	IN-EX	LIANA Kombi (ER), 1.4 DDiS	8HY		5.5	9.55	34.0	A	G1
8204.100	IN-EX	MINI (R56), Cooper D	9HZ (DV6TED4)/W16 D16		5.5	9.55	34.0	A	G1
8204.100	IN-EX	MINI CLUBMAN (R55), Cooper D	9HZ (DV6TED4)		5.5	9.55	34.0	A	G1
8204.100	IN-EX	NEMO Kasten (AA_), 1.4 HDi	8HS (DV4TED)		5.5	9.55	34.0	A	G1
8204.100	IN-EX	NEMO Kombi, 1.4 HDi	8HS (DV4TED)		5.5	9.55	34.0	A	G1
8111.600	IN-EX	Partner Combi Space 1.1	HDZ (TU1M)	22059	7.0	13.06	47.5	F	G
8111.600	IN-EX	Partner Combi Space 1.1	HFX (TU1JP)	22059	7.0	13.06	47.5	F	G
8111.600	IN-EX	Partner Combi Space 1.4	KFW (TU3JP)	22059	7.0	13.06	47.5	F	G
8111.600	IN-EX	Partner Combi Space 1.4	KFX (TU3JP)	22059	7.0	13.06	47.5	F	G
8159.601	IN-EX	PARTNER Combispace (5F), 1.1	HDZ (TU1M)/HFX (TU1JP)	22060	7.0	13.06	47.6	F	B
8204.100	IN-EX	PARTNER Combispace (5F), 1.6	9HW (DV6BTED4)		5.5	9.55	34.0	A	G1
8165.104	IN-EX	PARTNER Combispace (5F), 1.6	9HW (DV6BTED4)	0220A6	5.5	9.55	34.0	A	S03
8204.100	IN-EX	PARTNER Combispace (5F), 1.6	9HX (DV6ATED4)		5.5	9.55	34.0	A	G1
8165.104	IN-EX	PARTNER Combispace (5F), 1.6	9HX (DV6ATED4)	0220A6	5.5	9.55	34.0	A	S03
8134.601	IN-EX	PARTNER Combispace (5F), 1.8	LFX (XU7JB)	022072	8.0	13.07	45.0	F	B
8134.601	IN-EX	PARTNER Combispace (5F), 1.8	LFX (XU7JB)	022077	8.0	13.07	45.0	F	B
8131.600	IN-EX	PARTNER Combispace (5F), 1.8	LFX (XU7JB)	7701461009	8.0	13.07	45.0	F	G
8178.601	IN-EX	PARTNER Combispace (5F), 1.9	DJY (XUD9A)	22075	8.0	14.05	48.0	F	B
8178.601	IN-EX	PARTNER Combispace (5F), 1.9	DJY (XUD9A)	22076	8.0	14.05	48.0	F	B
8111.600	IN-EX	Partner Furgonato 1.1	HDZ (TU1M)	22059	7.0	13.06	47.5	F	G
8111.600	IN-EX	Partner Furgonato 1.4	KFX (TU3JP)	22059	7.0	13.06	47.5	F	G
8111.600	IN-EX	Partner Furgonato 1.4 BiFuel	KFW (TU3JP)	22059	7.0	13.06	47.5	F	G
8159.601	IN-EX	PARTNER Kasten (5), 1.1	HDZ (TU1M)	22060	7.0	13.06	47.6	F	B
8204.100	IN-EX	PARTNER Kasten (5), 1.6 HDi 75	9HW (DV6BTED4)		5.5	9.55	34.0	A	G1
8165.104	IN-EX	PARTNER Kasten (5), 1.6 HDi 75	9HW (DV6BTED4)	0220A6	5.5	9.55	34.0	A	S03
8204.100	IN-EX	PARTNER Kasten (5), 1.6 HDi 90	9HX (DV6ATED4)		5.5	9.55	34.0	A	G1
8165.104	IN-EX	PARTNER Kasten (5), 1.6 HDi 90	9HX (DV6ATED4)	0220A6	5.5	9.55	34.0	A	S03
8178.601	IN-EX	PARTNER Kasten (5), 1.9 D	DHY (XUD9TE)	22075	8.0	14.05	48.0	F	B
8178.601	IN-EX	PARTNER Kasten (5), 1.9 D	DHY (XUD9TE)	22076	8.0	14.05	48.0	F	B
8204.100	IN-EX	PARTNER Kasten, 1.6 HDi	9HZ (DV6TED4)		5.5	9.55	34.0	A	G1

(D1) Internal diameter, (D2) External diameter, (B) Shape, (C) Material

VALVE GUIDES

IVT Ref.	Type	Model	Engine	OEM Ref.	D1	D2	Length	B	C
PEUGEOT									
8165.104	IN-EX	PARTNER Kasten, 1.6 HDi	9HZ (DV6TED4)	0220A6	5.5	9.55	34.0	A	S03
8204.100	IN-EX	PARTNER Kasten, 1.6 HDi 16V	9HX (DV6ATED4)/9HS (DV6		5.5	9.55	34.0	A	G1
8165.104	IN-EX	PARTNER Kasten, 1.6 HDi 16V	9HX (DV6ATED4)/9HS (DV6	0220A6	5.5	9.55	34.0	A	S03
8204.100	IN-EX	PARTNER Tepee, 1.6 HDi	9HZ (DV6TED4)		5.5	9.55	34.0	A	G1
8165.104	IN-EX	PARTNER Tepee, 1.6 HDi	9HZ (DV6TED4)	0220A6	5.5	9.55	34.0	A	S03
8204.100	IN-EX	PARTNER Tepee, 1.6 HDi 16V	9HX (DV6ATED4)/9HV (DV6		5.5	9.55	34.0	A	G1
8165.104	IN-EX	PARTNER Tepee, 1.6 HDi 16V	9HX (DV6ATED4)/9HV (DV6	0220A6	5.5	9.55	34.0	A	S03
8204.100	IN-EX	S40 II (MS), 1.6 D	D 4164 T		5.5	9.55	34.0	A	G1
8204.100	IN-EX	SCUDO (272, 270), 1.6 D Multijet	9HU		5.5	9.55	34.0	A	G1
8204.100	IN-EX	SCUDO Kasten (272, 270), 1.6 D	9HU		5.5	9.55	34.0	A	G1
8204.100	IN-EX	SCUDO Pritsche/Fahrgestell (272,	9HU		5.5	9.55	34.0	A	G1
8204.100	IN-EX	S-MAX (WA6), 1.6 TDCi	T1WA/T1WB		5.5	9.55	34.0	A	G1
8204.100	IN-EX	SX4 (EY, GY), 1.6 DDIS	9HX		5.5	9.55	34.0	A	G1
8204.100	IN-EX	V50 (MW), 1.6 D	D 4164 T		5.5	9.55	34.0	A	G1
8204.100	IN-EX	XSARA (N1), 1.4 HDi	8HX (DV4TD)		5.5	9.55	34.0	A	G1
8204.100	IN-EX	XSARA Break (N2), 1.4 HDi	8HX (DV4TD)		5.5	9.55	34.0	A	G1
8204.100	IN-EX	XSARA Coupe (N0), 1.4 HDi	8HX (DV4TD)		5.5	9.55	34.0	A	G1
8204.100	IN-EX	XSARA PICASSO (N68), 1.6 HDi	9HX (DV6ATED4)		5.5	9.55	34.0	A	G1
8204.100	IN-EX	XSARA PICASSO (N68), 1.6 HDi	9HY (DV6TED4)/9HZ (DV6T		5.5	9.55	34.0	A	G1
PORSCHE									
8207.601	IN-EX	911 (996), 3.4 Carrera	M 96.01/M 96.04	99610411561	6.0	11.05	43.0	F	B
8207.601	IN-EX	911 (996), 3.4 Carrera 4	M 96.01/M 96.04	99610411561	6.0	11.05	43.0	F	B
8216.602	IN	911 (996), GT2 RS	M96.70	99610411576	6.0	11.05	36.8	F	Cu
8217.602	EX	911 (996), GT2 RS	M96.70	99610411671	6.0	11.05	42.8	F	Cu
8216.602	IN	911 (996), GT2 RS	M96.70E	99610411576	6.0	11.05	36.8	F	Cu
8217.602	EX	911 (996), GT2 RS	M96.70E	99610411671	6.0	11.05	42.8	F	Cu
8216.602	IN	911 (996), GT2 RS	M96.70S	99610411576	6.0	11.05	36.8	F	Cu
8217.602	EX	911 (996), GT2 RS	M96.70S	99610411671	6.0	11.05	42.8	F	Cu
8216.602	IN	911 (996), Turbo	M96.70	99610411576	6.0	11.05	36.8	F	Cu
8217.602	EX	911 (996), Turbo	M96.70	99610411671	6.0	11.05	42.8	F	Cu
8216.602	IN	911 (996), Turbo	M96.70E	99610411576	6.0	11.05	36.8	F	Cu
8217.602	EX	911 (996), Turbo	M96.70E	99610411671	6.0	11.05	42.8	F	Cu
8216.602	IN	911 (996), Turbo	M96.70S	99610411576	6.0	11.05	36.8	F	Cu
8217.602	EX	911 (996), Turbo	M96.70S	99610411671	6.0	11.05	42.8	F	Cu
8216.602	IN	911 (996), Turbo GT2	M96.70	99610411576	6.0	11.05	36.8	F	Cu
8217.602	EX	911 (996), Turbo GT2	M96.70	99610411671	6.0	11.05	42.8	F	Cu
8216.602	IN	911 (996), Turbo GT2	M96.70E	99610411576	6.0	11.05	36.8	F	Cu
8217.602	EX	911 (996), Turbo GT2	M96.70E	99610411671	6.0	11.05	42.8	F	Cu
8216.602	IN	911 (996), Turbo GT2	M96.70S	99610411576	6.0	11.05	36.8	F	Cu
8217.602	EX	911 (996), Turbo GT2	M96.70S	99610411671	6.0	11.05	42.8	F	Cu
8216.602	IN	911 (996), Turbo S	M96.70	99610411576	6.0	11.05	36.8	F	Cu
8217.602	EX	911 (996), Turbo S	M96.70	99610411671	6.0	11.05	42.8	F	Cu
8216.602	IN	911 (996), Turbo S	M96.70E	99610411576	6.0	11.05	36.8	F	Cu
8217.602	EX	911 (996), Turbo S	M96.70E	99610411671	6.0	11.05	42.8	F	Cu
8216.602	IN	911 (996), Turbo S	M96.70S	99610411576	6.0	11.05	36.8	F	Cu
8217.602	EX	911 (996), Turbo S	M96.70S	99610411671	6.0	11.05	42.8	F	Cu
8090.102	IN-EX	911 3.0 SC Carrera	930.02	93010432100	9.0	13.05	51.0	A	Cu
8090.102	IN-EX	911 3.0 SC Carrera	930.09	93010432100	9.0	13.05	51.0	A	Cu
8090.102	IN-EX	911 3.0 SC Carrera	930.10	93010432100	9.0	13.05	51.0	A	Cu
8090.102	IN-EX	911 3.2	930.25	93010432100	9.0	13.05	51.0	A	Cu
8090.102	IN-EX	911 3.2 SC Carrera	930.20	93010432100	9.0	13.05	51.0	A	Cu
8207.601	IN-EX	911 Cabriolet (996), 3.4 Carrera	M 96.01/M 96.04	99610411561	6.0	11.05	43.0	F	B
8207.601	IN-EX	911 Cabriolet (996), 3.4 Carrera 4	M 96.02/M 96.04	99610411561	6.0	11.05	43.0	F	B
8090.102	IN-EX	911 Cabriolet 3.1 Carrera Speedst	930.20	93010432100	9.0	13.05	51.0	A	Cu
8090.102	IN-EX	911 Cabriolet 3.1 Carrera Speedst	930.25	93010432100	9.0	13.05	51.0	A	Cu
8090.102	IN-EX	911 Cabriolet 3.1 SC Carrera	930.20	93010432100	9.0	13.05	51.0	A	Cu
8090.102	IN-EX	911 Targa 3.0 SC Carrera	930.02	93010432100	9.0	13.05	51.0	A	Cu
8090.102	IN-EX	911 Targa 3.0 SC Carrera	930.09	93010432100	9.0	13.05	51.0	A	Cu
8090.102	IN-EX	911 Targa 3.0 SC Carrera	930.10	93010432100	9.0	13.05	51.0	A	Cu
8207.601	IN-EX	BOXSTER (986), 2.5	M 96.20	99610411561	6.0	11.05	43.0	F	B

(D1) Internal diameter, (D2) External diameter, (B) Shape, (C) Material

VALVE GUIDES

IVT Ref.	Type	Model	Engine	OEM Ref.	D1	D2	Length	B	C
PUCH									
8168.600	IN	G-MODELL (W 460), 250 GD	OM 602.930	6010500624	8.0	14.03	39.5	F-1	G
8168.600	IN	G-MODELL (W 460), 250 GD	OM 602.930	6010500824	8.0	14.03	39.5	F-1	G
8168.600	IN	G-MODELL (W 461), 290 GD/G 2	OM 602.942	6010500624	8.0	14.03	39.5	F-1	G
8168.600	IN	G-MODELL (W 461), 290 GD/G 2	OM 602.942	6010500824	8.0	14.03	39.5	F-1	G
8168.600	IN	G-MODELL (W 461), G 290 TD	OM 602.983	6010500624	8.0	14.03	39.5	F-1	G
8168.600	IN	G-MODELL (W 461), G 290 TD	OM 602.983	6010500824	8.0	14.03	39.5	F-1	G
8168.600	IN	G-MODELL (W 463), 300 GD	OM 603.931	6010500624	8.0	14.03	39.5	F-1	G
8168.600	IN	G-MODELL (W 463), 300 GD	OM 603.931	6010500824	8.0	14.03	39.5	F-1	G
8168.600	IN	G-MODELL (W 463), 350 G Turbo	OM 603.972	6010500624	8.0	14.03	39.5	F-1	G
8168.600	IN	G-MODELL (W 463), 350 G Turbo	OM 603.972	6010500824	8.0	14.03	39.5	F-1	G
8185.600	IN-EX	G-MODELL (W 463), G 320	M 104.996	1110531029	7.0	12.56	37.5	F	G1
8185.600	IN-EX	G-MODELL (W 463), G 320	M 104.996	6060530230	7.0	12.56	37.5	F	G1
RENAULT									
8135.601	IN-EX	11 (B/C37_), 1.6 D (B/C374)	F8M 730/F8M 700/F8M 720		8.0	13.1	39.0	F	B
8177.601	EX	19 I (B/C53_), 1.4	E6J 701/E6J 700		7.0	12.06	19.0	F	B
8195.601	IN	19 I (B/C53_), 1.4	E6J 701/E6J 700		7.0	12.06	42.0	F	B
8177.601	EX	19 I (B/C53_), 1.4 (B/C532) KAT	C3J 710		7.0	12.06	19.0	F	B
8195.601	IN	19 I (B/C53_), 1.4 (B/C532) KAT	C3J 710		7.0	12.06	42.0	F	B
8177.601	EX	19 II (B/C53_), 1.4	E7J 706/E6J 700		7.0	12.06	19.0	F	B
8195.601	IN	19 II (B/C53_), 1.4	E7J 706/E6J 700		7.0	12.06	42.0	F	B
8177.601	EX	19 II (B/C53_), 1.4 (B/C532)	C3J 710		7.0	12.06	19.0	F	B
8195.601	IN	19 II (B/C53_), 1.4 (B/C532)	C3J 710		7.0	12.06	42.0	F	B
8177.601	EX	19 II (B/C53_), 1.4 (B/C535)	E7J 742		7.0	12.06	19.0	F	B
8195.601	IN	19 II (B/C53_), 1.4 (B/C535)	E7J 742		7.0	12.06	42.0	F	B
8175.901	IN-EX	19 II (B/C53_), 1.8 (5/353A)	F3P 706/F3P 760	7700868804	8.0	13.07	37.7	P	B
8175.901	IN-EX	19 II (B/C53_), 1.8 (5/353F, B/C53	F3P 765/F3P 682	7700868804	8.0	13.07	37.7	P	B
8175.901	IN-EX	19 II (B/C53_), 1.8 (B/C538)	F3P 700	7700868804	8.0	13.07	37.7	P	B
8175.901	IN-EX	19 II (B/C53_), 1.8 (B/C53Y)	F3P 706/F3P 707/F3P 760/F	7700868804	8.0	13.07	37.7	P	B
8135.601	IN-EX	19 II (B/C53_), 1.9 dT (B/C53T)	F8Q 744		8.0	13.1	39.0	F	B
8175.901	IN-EX	19 II Cabriolet (D53_, 853_), 1.8 (	F3P 706/F3P 760	7700868804	8.0	13.07	37.7	P	B
8175.901	IN-EX	19 II Cabriolet (D53_, 853_), 1.8 (	F3P 765/F3P 682/F3P 764	7700868804	8.0	13.07	37.7	P	B
8175.901	IN-EX	19 II Cabriolet (D53_, 853_), 1.8 (	F3P 704/F3P 706/F3P 707/F	7700868804	8.0	13.07	37.7	P	B
8177.601	EX	19 II Chamade (L53_), 1.4 (532)	C3J 710		7.0	12.06	19.0	F	B
8195.601	IN	19 II Chamade (L53_), 1.4 (532)	C3J 710		7.0	12.06	42.0	F	B
8177.601	EX	19 II Chamade (L53_), 1.4 (L535)	E7J 742		7.0	12.06	19.0	F	B
8195.601	IN	19 II Chamade (L53_), 1.4 (L535)	E7J 742		7.0	12.06	42.0	F	B
8175.901	IN-EX	19 II Chamade (L53_), 1.8	F3P 706/F3P 700	7700868804	8.0	13.07	37.7	P	B
8175.901	IN-EX	19 II Chamade (L53_), 1.8	F3P 765	7700868804	8.0	13.07	37.7	P	B
8175.901	IN-EX	19 II Chamade (L53_), 1.8 (453A/	F3P 706/F3P 760	7700868804	8.0	13.07	37.7	P	B
8175.901	IN-EX	19 II Chamade (L53_), 1.8 (L538)	F3P 700	7700868804	8.0	13.07	37.7	P	B
8175.901	IN-EX	19 II Chamade (L53_), 1.8 (L53V,	F3P 682	7700868804	8.0	13.07	37.7	P	B
8175.901	IN-EX	19 II Chamade (L53_), 1.8 (L53Y)	F3P 704/F3P 706/F3P 707/F	7700868804	8.0	13.07	37.7	P	B
8135.601	IN-EX	21 (B48_), 1.9 D (B48H, B48I)	F8Q 710		8.0	13.1	39.0	F	B
8134.601	IN-EX	25 (B29_), 2.8 V6 (B293)	Z7W 700	022072	8.0	13.07	45.0	F	B
8134.601	IN-EX	25 (B29_), 2.8 V6 Injection (B29A)	Z7W 702	022072	8.0	13.07	45.0	F	B
8134.601	IN-EX	25 (B29_), 2.8 V6 Injection (B29F)	Z7W 706/Z7W 707/Z7W 709	022072	8.0	13.07	45.0	F	B
8135.601	IN-EX	9 (L42_), 1.6 D (L424)	F8M 730/F8M 700/F8M 720		8.0	13.1	39.0	F	B
8157.601	IN-EX	AVANTIME (DE0_), 2.2 dCi (DE0	G9T 712	8200562080	6.0	11.07	40.5	F	B
8083.101	IN-EX	Avantime 2.0 16V Turbo	F4R 760	7700109151	5.5	11.07	40.6	A	B
8083.101	IN-EX	Avantime 2.0 16V Turbo	F4R 761	7700109151	5.5	11.07	40.6	A	B
8083.101	IN-EX	Avantime 2.0 16V Turbo	F4R 769	7700109151	5.5	11.07	40.6	A	B
8069.601	IN-EX	Cangoo 1.9 dCi 4x4	F9Q 790	7700859086	7.0	12.06	38.3	F-1	B
8069.601	IN-EX	Cangoo 1.9 dCi 4x4	F9Q 790	M889393	7.0	12.06	38.3	F-1	B
8069.601	IN-EX	Cangoo 1.9 dTi	F9Q 780	7700859086	7.0	12.06	38.3	F-1	B
8069.601	IN-EX	Cangoo 1.9 dTi	F9Q 780	M889393	7.0	12.06	38.3	F-1	B
8069.601	IN-EX	Cangoo Express 1.9 dCi	F9Q 790	7700859086	7.0	12.06	38.3	F-1	B
8069.601	IN-EX	Cangoo Express 1.9 dCi	F9Q 790	M889393	7.0	12.06	38.3	F-1	B
8069.601	IN-EX	Cangoo Express 1.9 dCi 4x4	F9Q 790	7700859086	7.0	12.06	38.3	F-1	B
8069.601	IN-EX	Cangoo Express 1.9 dCi 4x4	F9Q 790	M889393	7.0	12.06	38.3	F-1	B
8069.601	IN-EX	Cangoo Express 1.9 dTi	F9Q 780	7700859086	7.0	12.06	38.3	F-1	B
8069.601	IN-EX	Cangoo Express 1.9 dTi	F9Q 780	M889393	7.0	12.06	38.3	F-1	B

(D1) Internal diameter, (D2) External diameter, (B) Shape, (C) Material

VALVE GUIDES

IVT Ref.	Type	Model	Engine	OEM Ref.	D1	D2	Length	B	C
RENAULT									
8177.601	EX	CLIO I (B/C57_, 5/357_), 1.2 (B/C/	E7F 750/E7F 700/E7F 708		7.0	12.06	19.0	F	B
8195.601	IN	CLIO I (B/C57_, 5/357_), 1.2 (B/C/	E7F 750/E7F 700/E7F 708		7.0	12.06	42.0	F	B
8177.601	EX	CLIO I (B/C57_, 5/357_), 1.2 (B/C	E7F 706		7.0	12.06	19.0	F	B
8195.601	IN	CLIO I (B/C57_, 5/357_), 1.2 (B/C	E7F 706		7.0	12.06	42.0	F	B
8177.601	EX	CLIO I (B/C57_, 5/357_), 1.4	E7J 710 /E7J 711		7.0	12.06	19.0	F	B
8195.601	IN	CLIO I (B/C57_, 5/357_), 1.4	E7J 710 /E7J 711		7.0	12.06	42.0	F	B
8143.601	IN-EX	CLIO I (B/C57_, 5/357_), 1.4	E7J 710 /E7J 711	022084	7.0	13.07	48.5	F	B
8177.601	EX	CLIO I (B/C57_, 5/357_), 1.4 (B/C	E7J 719 /E7J 601 /E7J 718/E		7.0	12.06	19.0	F	B
8195.601	IN	CLIO I (B/C57_, 5/357_), 1.4 (B/C	E7J 719 /E7J 601 /E7J 718/E		7.0	12.06	42.0	F	B
8143.601	IN-EX	CLIO I (B/C57_, 5/357_), 1.4 (B/C	E7J 719 /E7J 601 /E7J 718/E	022084	7.0	13.07	48.5	F	B
8177.601	EX	CLIO I (B/C57_, 5/357_), 1.4 (B57	E7J 756/E7J 757		7.0	12.06	19.0	F	B
8195.601	IN	CLIO I (B/C57_, 5/357_), 1.4 (B57	E7J 756/E7J 757		7.0	12.06	42.0	F	B
8143.601	IN-EX	CLIO I (B/C57_, 5/357_), 1.4 (B57	E7J 756/E7J 757	022084	7.0	13.07	48.5	F	B
8175.901	IN-EX	CLIO I (B/C57_, 5/357_), 1.8	F3P 710	7700868804	8.0	13.07	37.7	P	B
8175.901	IN-EX	CLIO I (B/C57_, 5/357_), 1.8 (B/C	F3P 755 /F3P 754	7700868804	8.0	13.07	37.7	P	B
8175.901	IN-EX	CLIO I (B/C57_, 5/357_), 1.8 (B/C	F3P 710 /F3P 714	7700868804	8.0	13.07	37.7	P	B
8175.901	IN-EX	CLIO I (B/C57_, 5/357_), 1.8 Rsi (	F3P 758	7700868804	8.0	13.07	37.7	P	B
8135.601	IN-EX	CLIO I (B/C57_, 5/357_), 1.9 D (B	F8Q 730/F8Q 732		8.0	13.1	39.0	F	B
8175.901	IN-EX	CLIO I (B/C57_, 5/357_), 1.9 D	F8Q 678	7700868804	8.0	13.07	37.7	P	B
8177.601	EX	CLIO II (BB0/1/2_, CB0/1/2_), 1.4	E7J 634/E7J 780/K7J 700		7.0	12.06	19.0	F	B
8195.601	IN	CLIO II (BB0/1/2_, CB0/1/2_), 1.4	E7J 634/E7J 780/K7J 700		7.0	12.06	42.0	F	B
8035.601	IN-EX	CLIO II (BB0/1/2_, CB0/1/2_), 1.5	K9K 704		6.0	11.07	40.5	F	B
8035.601	IN-EX	CLIO II (BB0/1/2_, CB0/1/2_), 1.5	K9K 712		6.0	11.07	40.5	F	B
8035.601	IN-EX	CLIO II (BB0/1/2_, CB0/1/2_), 1.5	K9K 702		6.0	11.07	40.5	F	B
8035.601	IN-EX	CLIO II (BB0/1/2_, CB0/1/2_), 1.5	K9K 704/K9K 700		6.0	11.07	40.5	F	B
8035.601	IN-EX	CLIO II (BB0/1/2_, CB0/1/2_), 1.5	K9K 702		6.0	11.07	40.5	F	B
8177.601	EX	CLIO II (BB0/1/2_, CB0/1/2_), 1.6	K7M 744/K7M 745		7.0	12.06	19.0	F	B
8195.601	IN	CLIO II (BB0/1/2_, CB0/1/2_), 1.6	K7M 744/K7M 745		7.0	12.06	42.0	F	B
8114.101	IN-EX	Clio II 1.2	D7F 720		6.0	11.07	45.0	A	B
8114.101	IN-EX	Clio II 1.2	D7F 722		6.0	11.07	45.0	A	B
8114.101	IN-EX	Clio II 1.2	D7F 726		6.0	11.07	45.0	A	B
8114.101	IN-EX	Clio II 1.2	D7F 746		6.0	11.07	45.0	A	B
8114.101	IN-EX	Clio II 1.2	D7F 764		6.0	11.07	45.0	A	B
8114.101	IN-EX	Clio II 1.2	D7F 766		6.0	11.07	45.0	A	B
8069.601	IN-EX	Clio II 1.9 dTi	F9Q 780	7700859086	7.0	12.06	38.3	F-1	B
8069.601	IN-EX	Clio II 1.9 dTi	F9Q 780	M889393	7.0	12.06	38.3	F-1	B
8083.101	IN-EX	Clio II 2.0 16V Sport	F4R 730	7700109151	5.5	11.07	40.6	A	B
8083.101	IN-EX	Clio II 2.0 16V Sport	F4R 738	7700109151	5.5	11.07	40.6	A	B
8114.101	IN-EX	Clio II Furgonato 1.1	D7F 720		6.0	11.07	45.0	A	B
8114.101	IN-EX	Clio II Furgonato 1.1	D7F 726		6.0	11.07	45.0	A	B
8114.101	IN-EX	Clio II Furgonato 1.1	D7F 746		6.0	11.07	45.0	A	B
8114.101	IN-EX	Clio II Furgonato 1.2	D7F 722		6.0	11.07	45.0	A	B
8114.101	IN-EX	Clio II Furgonato 1.2	D7F 726		6.0	11.07	45.0	A	B
8114.101	IN-EX	Clio II Furgonato 1.2	D7F 746		6.0	11.07	45.0	A	B
8069.601	IN-EX	Clio II Furgonato 1.9 dTi	F9Q 780	7700859086	7.0	12.06	38.3	F-1	B
8069.601	IN-EX	Clio II Furgonato 1.9 dTi	F9Q 780	M889393	7.0	12.06	38.3	F-1	B
8035.601	IN-EX	CLIO II Kasten (SB0/1/2_), 1.5 dCi	K9K 704/K9K 700		6.0	11.07	40.5	F	B
8035.601	IN-EX	CLIO III (BR0/1, CR0/1), 1.5 dCi (	K9K 764/K9K 774		6.0	11.07	40.5	F	B
8035.601	IN-EX	CLIO III (BR0/1, CR0/1), 1.5 dCi (	K9K 766		6.0	11.07	40.5	F	B
8035.601	IN-EX	CLIO III (BR0/1, CR0/1), 1.5 dCi (	K9K 768/K9K 714		6.0	11.07	40.5	F	B
8083.101	IN-EX	Clio III 2.0 16V Sport	F4R 830	7700109151	5.5	11.07	40.6	A	B
8134.601	IN-EX	ESPACE II (J/S63_), 2.8 V6 (J638	Z7W 717/Z7W 712/Z7W 713	022072	8.0	13.07	45.0	F	B
8175.901	IN-EX	ESPACE III (JE0_), 2.0 (JE0A)	F3R 769/F3R 728/F3R 742/F	7700868804	8.0	13.07	37.7	P	B
8177.601	EX	ESPACE III (JE0_), 2.2 12V TD (J	G8T 716/G8T 714/G8T 760		7.0	12.06	19.0	F	B
8195.601	IN	ESPACE III (JE0_), 2.2 12V TD (J	G8T 716/G8T 714/G8T 760		7.0	12.06	42.0	F	B
8157.601	IN-EX	ESPACE III (JE0_), 2.2 dCi (JE0K	G9T 710/G9T 642	8200562080	6.0	11.07	40.5	F	B
8157.601	IN-EX	ESPACE III (JE0_), 2.2 dCi (JEO	G9T 710	8200562080	6.0	11.07	40.5	F	B
8134.601	IN-EX	ESPACE III (JE0_), 3.0 (JE0D)	Z7X 775	022072	8.0	13.07	45.0	F	B
8069.601	IN-EX	Espace III 1.9 dTi	F9Q 722	7700859086	7.0	12.06	38.3	F-1	B
8069.601	IN-EX	Espace III 1.9 dTi	F9Q 722	M889393	7.0	12.06	38.3	F-1	B
8083.101	IN-EX	Espace III 2.0	F4R 700	7700109151	5.5	11.07	40.6	A	B
8083.101	IN-EX	Espace III 2.0	F4R 701	7700109151	5.5	11.07	40.6	A	B

(D1) Internal diameter, (D2) External diameter, (B) Shape, (C) Material

VALVE GUIDES

RENAULT

IVT Ref.	Type	Model	Engine	OEM Ref.	D1	D2	Length	B	C
8083.101	IN-EX	Espace III 2.0 16V	F4R 700	7700109151	5.5	11.07	40.6	A	B
8083.101	IN-EX	Espace III 2.0 16V	F4R 701	7700109151	5.5	11.07	40.6	A	B
8157.601	IN-EX	ESPACE IV (JK0/1_), 2.2 dCi (JK	G9T 645	8200562080	6.0	11.07	40.5	F	B
8157.601	IN-EX	ESPACE IV (JK0/1_), 2.2 dCi (JK	G9T 742/G9T 743	8200562080	6.0	11.07	40.5	F	B
8069.601	IN-EX	Espace IV 1.9 dCi	F9Q 680	7700859086	7.0	12.06	38.3	F-1	B
8069.601	IN-EX	Espace IV 1.9 dCi	F9Q 680	M889393	7.0	12.06	38.3	F-1	B
8069.601	IN-EX	Espace IV 1.9 dCi	F9Q 820	7700859086	7.0	12.06	38.3	F-1	B
8069.601	IN-EX	Espace IV 1.9 dCi	F9Q 820	M889393	7.0	12.06	38.3	F-1	B
8069.601	IN-EX	Espace IV 1.9 dCi	F9Q 826	7700859086	7.0	12.06	38.3	F-1	B
8069.601	IN-EX	Espace IV 1.9 dCi	F9Q 826	M889393	7.0	12.06	38.3	F-1	B
8083.101	IN-EX	Espace IV 2.0 16V	F4R 790	7700109151	5.5	11.07	40.6	A	B
8083.101	IN-EX	Espace IV 2.0 16V	F4R 792	7700109151	5.5	11.07	40.6	A	B
8083.101	IN-EX	Espace IV 2.0 Turbo	F4R 794	7700109151	5.5	11.07	40.6	A	B
8083.101	IN-EX	Espace IV 2.0 Turbo	F4R 795	7700109151	5.5	11.07	40.6	A	B
8083.101	IN-EX	Espace IV 2.0 Turbo	F4R 796	7700109151	5.5	11.07	40.6	A	B
8083.101	IN-EX	Espace IV 2.0 Turbo	F4R 797	7700109151	5.5	11.07	40.6	A	B
8083.101	IN-EX	Gran Scenic II 2.0	F4R 770	7700109151	5.5	11.07	40.6	A	B
8083.101	IN-EX	Gran Scenic II 2.0	F4R 771	7700109151	5.5	11.07	40.6	A	B
8083.101	IN-EX	Gran Scenic II 2.0	F4R 776	7700109151	5.5	11.07	40.6	A	B
8035.601	IN-EX	GRAND SCÉNIC II (JM0/1_), 1.5	K9K 728		6.0	11.07	40.5	F	B
8069.601	IN-EX	Grand Scenic II 1.9 dCi	F9Q 812	7700859086	7.0	12.06	38.3	F-1	B
8069.601	IN-EX	Grand Scenic II 1.9 dCi	F9Q 812	M889393	7.0	12.06	38.3	F-1	B
8069.601	IN-EX	Grand Scenic II 1.9 dCi	F9Q 816	7700859086	7.0	12.06	38.3	F-1	B
8069.601	IN-EX	Grand Scenic II 1.9 dCi	F9Q 816	M889393	7.0	12.06	38.3	F-1	B
8069.601	IN-EX	Grand Scenic II 1.9 dCi	F9Q 818	7700859086	7.0	12.06	38.3	F-1	B
8069.601	IN-EX	Grand Scenic II 1.9 dCi	F9Q 818	M889393	7.0	12.06	38.3	F-1	B
8069.601	IN-EX	Grand Scenic II 1.9 dCi	F9Q EE 804	7700859086	7.0	12.06	38.3	F-1	B
8069.601	IN-EX	Grand Scenic II 1.9 dCi	F9Q EE 804	M889393	7.0	12.06	38.3	F-1	B
8069.601	IN-EX	Grand Scenic II 1.9 dCi	F9Q J 803	7700859086	7.0	12.06	38.3	F-1	B
8069.601	IN-EX	Grand Scenic II 1.9 dCi	F9Q J 803	M889393	7.0	12.06	38.3	F-1	B
8177.601	EX	KANGOO (KC0/1_), 1.4 (KC0C, K	E7J 634/K7J 701/E7J 635/E7		7.0	12.06	19.0	F	B
8195.601	IN	KANGOO (KC0/1_), 1.4 (KC0C, K	E7J 634/K7J 701/E7J 635/E7		7.0	12.06	42.0	F	B
8035.601	IN-EX	KANGOO (KC0/1_), 1.5 dCi	K9K 702/K9K 700		6.0	11.07	40.5	F	B
8035.601	IN-EX	KANGOO (KC0/1_), 1.5 dCi	K9K 704		6.0	11.07	40.5	F	B
8035.601	IN-EX	KANGOO (KC0/1_), 1.5 dCi	K9K 714		6.0	11.07	40.5	F	B
8035.601	IN-EX	KANGOO (KC0/1_), 1.5 dCi	K9K 718		6.0	11.07	40.5	F	B
8035.601	IN-EX	KANGOO (KC0/1_), 1.5 dCi (KC0	K9K 704/K9K 700		6.0	11.07	40.5	F	B
8035.601	IN-EX	KANGOO (KC0/1_), 1.5 dCi (KC0	K9K 702/K9K 710		6.0	11.07	40.5	F	B
8035.601	IN-EX	KANGOO (KC0/1_), 1.6 16V bival	K4M 850		6.0	11.07	40.5	F	B
8114.101	IN-EX	Kangoo 1.2	D7F 722		6.0	11.07	45.0	A	B
8114.101	IN-EX	Kangoo 1.2	D7F 726		6.0	11.07	45.0	A	B
8114.101	IN-EX	Kangoo 1.2	D7F 746		6.0	11.07	45.0	A	B
8177.601	EX	KANGOO Express (FC0/1_), 1.4 (	E7J 634/K7J 701/E7J 635/E7		7.0	12.06	19.0	F	B
8195.601	IN	KANGOO Express (FC0/1_), 1.4 (	E7J 634/K7J 701/E7J 635/E7		7.0	12.06	42.0	F	B
8035.601	IN-EX	KANGOO Express (FC0/1_), 1.5 d	K9K 702/K9K 704/K9K 700		6.0	11.07	40.5	F	B
8035.601	IN-EX	KANGOO Express (FC0/1_), 1.5 d	K9K 702/K9K 710		6.0	11.07	40.5	F	B
8035.601	IN-EX	KANGOO Express (FC0/1_), 1.5 d	K9K 714		6.0	11.07	40.5	F	B
8035.601	IN-EX	KANGOO Express (FC0/1_), 1.5 d	K9K 718		6.0	11.07	40.5	F	B
8035.601	IN-EX	KANGOO Express (FC0/1_), 1.5 d	K9K 704		6.0	11.07	40.5	F	B
8114.101	IN-EX	Kangoo Express 1.2	D7F 710		6.0	11.07	45.0	A	B
8114.101	IN-EX	Kangoo Express 1.2	D7F 720		6.0	11.07	45.0	A	B
8114.101	IN-EX	Kangoo Express 1.2	D7F 722		6.0	11.07	45.0	A	B
8114.101	IN-EX	Kangoo Express 1.2	D7F 726		6.0	11.07	45.0	A	B
8114.101	IN-EX	Kangoo Express 1.2	D7F 744		6.0	11.07	45.0	A	B
8114.101	IN-EX	Kangoo Express 1.2	D7F 746		6.0	11.07	45.0	A	B
8114.101	IN-EX	Kangoo Express 1.2	D7F 764		6.0	11.07	45.0	A	B
8114.101	IN-EX	Kangoo Express 1.2	D7F 766		6.0	11.07	45.0	A	B
8035.601	IN-EX	LAGUNA Coupe (DT0/1), 1.5 dCi	K9K 846		6.0	11.07	40.5	F	B
8083.101	IN-EX	Laguna Coupé 2.0 16V Turbo	F4R 811	7700109151	5.5	11.07	40.6	A	B
8083.101	IN-EX	Laguna Coupé 2.0 16V Turbo	F4R 813	7700109151	5.5	11.07	40.6	A	B
8083.101	IN-EX	Laguna Coupé 2.0 16V Turbo	F4R t 811	7700109151	5.5	11.07	40.6	A	B
8175.901	IN-EX	LAGUNA I (B56_, 556_), 1.8 (B56	F3P 720/F3P 724	7700868804	8.0	13.07	37.7	P	B

(D1) Internal diameter, (D2) External diameter, (B) Shape, (C) Material

VALVE GUIDES

IVT Ref.	Type	Model	Engine	OEM Ref.	D1	D2	Length	B	C
RENAULT									
8175.901	IN-EX	LAGUNA I (B56_, 556_), 1.8 (B56	F3P 678/F3P 670	7700868804	8.0	13.07	37.7	P	B
8175.901	IN-EX	LAGUNA I (B56_, 556_), 1.8 (B56	F3P 720/F3P 724	7700868804	8.0	13.07	37.7	P	B
8175.901	IN-EX	LAGUNA I (B56_, 556_), 2.0	F3R 611	7700868804	8.0	13.07	37.7	P	B
8175.901	IN-EX	LAGUNA I (B56_, 556_), 2.0	F3R 768	7700868804	8.0	13.07	37.7	P	B
8175.901	IN-EX	LAGUNA I (B56_, 556_), 2.0 (B56	F3R 722/F3R 723	7700868804	8.0	13.07	37.7	P	B
8177.601	EX	LAGUNA I (B56_, 556_), 2.2 D (B	G8T 706/G8T 752/G8T 794/		7.0	12.06	19.0	F	B
8195.601	IN	LAGUNA I (B56_, 556_), 2.2 D (B	G8T 706/G8T 752/G8T 794/		7.0	12.06	42.0	F	B
8177.601	EX	LAGUNA I (B56_, 556_), 2.2 dT (	G8T 760		7.0	12.06	19.0	F	B
8195.601	IN	LAGUNA I (B56_, 556_), 2.2 dT (	G8T 760		7.0	12.06	42.0	F	B
8134.601	IN-EX	LAGUNA I (B56_, 556_), 3.0 (B56	Z7X 765/Z7X 760	022072	8.0	13.07	45.0	F	B
8083.101	IN-EX	Laguna I 1.8 16V	F4P 760	7700109151	5.5	11.07	40.6	A	B
8069.601	IN-EX	Laguna I 1.9 dCi	F9Q 718	7700859086	7.0	12.06	38.3	F-1	B
8069.601	IN-EX	Laguna I 1.9 dCi	F9Q 718	M889393	7.0	12.06	38.3	F-1	B
8069.601	IN-EX	Laguna I 1.9 dTi	F9Q 710	7700859086	7.0	12.06	38.3	F-1	B
8069.601	IN-EX	Laguna I 1.9 dTi	F9Q 710	M889393	7.0	12.06	38.3	F-1	B
8069.601	IN-EX	Laguna I 1.9 dTi	F9Q 716	7700859086	7.0	12.06	38.3	F-1	B
8069.601	IN-EX	Laguna I 1.9 dTi	F9Q 716	M889393	7.0	12.06	38.3	F-1	B
8069.601	IN-EX	Laguna I 1.9 dTi	F9Q 717	7700859086	7.0	12.06	38.3	F-1	B
8069.601	IN-EX	Laguna I 1.9 dTi	F9Q 717	M889393	7.0	12.06	38.3	F-1	B
8083.101	IN-EX	Laguna I 2.0 16V	F4R 780	7700109151	5.5	11.07	40.6	A	B
8069.601	IN-EX	Laguna I Grand Tour 1.9 dCi	F9Q 718	7700859086	7.0	12.06	38.3	F-1	B
8069.601	IN-EX	Laguna I Grand Tour 1.9 dCi	F9Q 718	M889393	7.0	12.06	38.3	F-1	B
8069.601	IN-EX	Laguna I Grand Tour 1.9 dTi	F9Q 710	7700859086	7.0	12.06	38.3	F-1	B
8069.601	IN-EX	Laguna I Grand Tour 1.9 dTi	F9Q 710	M889393	7.0	12.06	38.3	F-1	B
8069.601	IN-EX	Laguna I Grand Tour 1.9 dTi	F9Q 716	7700859086	7.0	12.06	38.3	F-1	B
8069.601	IN-EX	Laguna I Grand Tour 1.9 dTi	F9Q 716	M889393	7.0	12.06	38.3	F-1	B
8175.901	IN-EX	LAGUNA I Grandtour (K56_), 1.8 (	F3P 678/F3P 670	7700868804	8.0	13.07	37.7	P	B
8175.901	IN-EX	LAGUNA I Grandtour (K56_), 1.8 (	F3P 720/F3P 724	7700868804	8.0	13.07	37.7	P	B
8175.901	IN-EX	LAGUNA I Grandtour (K56_), 2.0	F3R 768	7700868804	8.0	13.07	37.7	P	B
8175.901	IN-EX	LAGUNA I Grandtour (K56_), 2.0 (	F3R 722/F3R 723	7700868804	8.0	13.07	37.7	P	B
8177.601	EX	LAGUNA I Grandtour (K56_), 2.2	G8T 706/G8T 752/G8T 794/		7.0	12.06	19.0	F	B
8195.601	IN	LAGUNA I Grandtour (K56_), 2.2	G8T 706/G8T 752/G8T 794/		7.0	12.06	42.0	F	B
8177.601	EX	LAGUNA I Grandtour (K56_), 2.2	G8T 760		7.0	12.06	19.0	F	B
8195.601	IN	LAGUNA I Grandtour (K56_), 2.2	G8T 760		7.0	12.06	42.0	F	B
8083.101	IN-EX	Laguna I Grandtour 1.8 16V	F4P 760	7700109151	5.5	11.07	40.6	A	B
8083.101	IN-EX	Laguna I Grandtour 2.0 16V	F4R 780	7700109151	5.5	11.07	40.6	A	B
8157.601	IN-EX	LAGUNA II (BG0/1_), 2.2 dCi	G9T 707/G9T 600/G9T 706/	8200562080	6.0	11.07	40.5	F	B
8157.601	IN-EX	LAGUNA II (BG0/1_), 2.2 dCi (BG	G9T 700/G9T 702	8200562080	6.0	11.07	40.5	F	B
8083.101	IN-EX	Laguna II 1.8 16V	F4P 770	7700109151	5.5	11.07	40.6	A	B
8083.101	IN-EX	Laguna II 1.8 16V	F4P 771	7700109151	5.5	11.07	40.6	A	B
8083.101	IN-EX	Laguna II 1.8 16V	F4P 772	7700109151	5.5	11.07	40.6	A	B
8083.101	IN-EX	Laguna II 1.8 16V	F4P 773	7700109151	5.5	11.07	40.6	A	B
8083.101	IN-EX	Laguna II 1.8 16V	F4P 774	7700109151	5.5	11.07	40.6	A	B
8083.101	IN-EX	Laguna II 1.8 16V	F4P 775	7700109151	5.5	11.07	40.6	A	B
8069.601	IN-EX	Laguna II 1.9 dCi	F9Q 670	7700859086	7.0	12.06	38.3	F-1	B
8069.601	IN-EX	Laguna II 1.9 dCi	F9Q 670	M889393	7.0	12.06	38.3	F-1	B
8069.601	IN-EX	Laguna II 1.9 dCi	F9Q 674	7700859086	7.0	12.06	38.3	F-1	B
8069.601	IN-EX	Laguna II 1.9 dCi	F9Q 674	M889393	7.0	12.06	38.3	F-1	B
8069.601	IN-EX	Laguna II 1.9 dCi	F9Q 750	7700859086	7.0	12.06	38.3	F-1	B
8069.601	IN-EX	Laguna II 1.9 dCi	F9Q 750	M889393	7.0	12.06	38.3	F-1	B
8069.601	IN-EX	Laguna II 1.9 dCi	F9Q 754	7700859086	7.0	12.06	38.3	F-1	B
8069.601	IN-EX	Laguna II 1.9 dCi	F9Q 754	M889393	7.0	12.06	38.3	F-1	B
8069.601	IN-EX	Laguna II 1.9 dCi	F9Q 758	7700859086	7.0	12.06	38.3	F-1	B
8069.601	IN-EX	Laguna II 1.9 dCi	F9Q 758	M889393	7.0	12.06	38.3	F-1	B
8069.601	IN-EX	Laguna II 1.9 dCi	F9Q 759	7700859086	7.0	12.06	38.3	F-1	B
8069.601	IN-EX	Laguna II 1.9 dCi	F9Q 759	M889393	7.0	12.06	38.3	F-1	B
8083.101	IN-EX	Laguna II 2.0 16V	F4R 712	7700109151	5.5	11.07	40.6	A	B
8083.101	IN-EX	Laguna II 2.0 16V	F4R 713	7700109151	5.5	11.07	40.6	A	B
8083.101	IN-EX	Laguna II 2.0 16V	F4R 714	7700109151	5.5	11.07	40.6	A	B
8083.101	IN-EX	Laguna II 2.0 16V	F4R 715	7700109151	5.5	11.07	40.6	A	B
8083.101	IN-EX	Laguna II 2.0 16V	F4R 784	7700109151	5.5	11.07	40.6	A	B
8083.101	IN-EX	Laguna II 2.0 16V	F4R 786	7700109151	5.5	11.07	40.6	A	B

(D1) Internal diameter, (D2) External diameter, (B) Shape, (C) Material

VALVE GUIDES

RENAULT

IVT Ref.	Type	Model	Engine	OEM Ref.	D1	D2	Length	B	C
8083.101	IN-EX	Laguna II 2.0 16V	F4R 787	7700109151	5.5	11.07	40.6	A	B
8083.101	IN-EX	Laguna II 2.0 16V	F4R 886	7700109151	5.5	11.07	40.6	A	B
8083.101	IN-EX	Laguna II 2.0 16V	F4R 887	7700109151	5.5	11.07	40.6	A	B
8083.101	IN-EX	Laguna II 2.0 16V Turbo	F4R 764	7700109151	5.5	11.07	40.6	A	B
8083.101	IN-EX	Laguna II 2.0 16V Turbo	F4R 765	7700109151	5.5	11.07	40.6	A	B
8083.101	IN-EX	Laguna II 2.0 16V Turbo	F4R 786	7700109151	5.5	11.07	40.6	A	B
8083.101	IN-EX	Laguna II 2.0 16V Turbo	F4R 787	7700109151	5.5	11.07	40.6	A	B
8069.601	IN-EX	Laguna II Grand Tour 1.9 dCi	F9Q 664	7700859086	7.0	12.06	38.3	F-1	B
8069.601	IN-EX	Laguna II Grand Tour 1.9 dCi	F9Q 664	M889393	7.0	12.06	38.3	F-1	B
8069.601	IN-EX	Laguna II Grand Tour 1.9 dCi	F9Q 670	7700859086	7.0	12.06	38.3	F-1	B
8069.601	IN-EX	Laguna II Grand Tour 1.9 dCi	F9Q 670	M889393	7.0	12.06	38.3	F-1	B
8069.601	IN-EX	Laguna II Grand Tour 1.9 dCi	F9Q 674	7700859086	7.0	12.06	38.3	F-1	B
8069.601	IN-EX	Laguna II Grand Tour 1.9 dCi	F9Q 674	7700859086	7.0	12.06	38.3	F-1	B
8069.601	IN-EX	Laguna II Grand Tour 1.9 dCi	F9Q 674	M889393	7.0	12.06	38.3	F-1	B
8069.601	IN-EX	Laguna II Grand Tour 1.9 dCi	F9Q 674	M889393	7.0	12.06	38.3	F-1	B
8069.601	IN-EX	Laguna II Grand Tour 1.9 dCi	F9Q 718	7700859086	7.0	12.06	38.3	F-1	B
8069.601	IN-EX	Laguna II Grand Tour 1.9 dCi	F9Q 718	M889393	7.0	12.06	38.3	F-1	B
8069.601	IN-EX	Laguna II Grand Tour 1.9 dCi	F9Q 750	7700859086	7.0	12.06	38.3	F-1	B
8069.601	IN-EX	Laguna II Grand Tour 1.9 dCi	F9Q 750	M889393	7.0	12.06	38.3	F-1	B
8069.601	IN-EX	Laguna II Grand Tour 1.9 dCi	F9Q 752	7700859086	7.0	12.06	38.3	F-1	B
8069.601	IN-EX	Laguna II Grand Tour 1.9 dCi	F9Q 752	M889393	7.0	12.06	38.3	F-1	B
8069.601	IN-EX	Laguna II Grand Tour 1.9 dCi	F9Q 754	7700859086	7.0	12.06	38.3	F-1	B
8069.601	IN-EX	Laguna II Grand Tour 1.9 dCi	F9Q 754	M889393	7.0	12.06	38.3	F-1	B
8069.601	IN-EX	Laguna II Grand Tour 1.9 dCi	F9Q 758	7700859086	7.0	12.06	38.3	F-1	B
8069.601	IN-EX	Laguna II Grand Tour 1.9 dCi	F9Q 758	7700859086	7.0	12.06	38.3	F-1	B
8069.601	IN-EX	Laguna II Grand Tour 1.9 dCi	F9Q 758	M889393	7.0	12.06	38.3	F-1	B
8069.601	IN-EX	Laguna II Grand Tour 1.9 dCi	F9Q 758	M889393	7.0	12.06	38.3	F-1	B
8069.601	IN-EX	Laguna II Grand Tour 1.9 dCi	F9Q 759	7700859086	7.0	12.06	38.3	F-1	B
8069.601	IN-EX	Laguna II Grand Tour 1.9 dCi	F9Q 759	M889393	7.0	12.06	38.3	F-1	B
8157.601	IN-EX	LAGUNA II Grandtour (KG0/1_), 2	G9T 707/G9T 600/G9T 706	8200562080	6.0	11.07	40.5	F	B
8157.601	IN-EX	LAGUNA II Grandtour (KG0/1_), 2	G9T 702	8200562080	6.0	11.07	40.5	F	B
8083.101	IN-EX	Laguna II Grandtour 1.8 16V	F4P 770	7700109151	5.5	11.07	40.6	A	B
8083.101	IN-EX	Laguna II Grandtour 1.8 16V	F4P 771	7700109151	5.5	11.07	40.6	A	B
8083.101	IN-EX	Laguna II Grandtour 1.8 16V	F4P 773	7700109151	5.5	11.07	40.6	A	B
8083.101	IN-EX	Laguna II Grandtour 1.8 16V	F4P 774	7700109151	5.5	11.07	40.6	A	B
8083.101	IN-EX	Laguna II Grandtour 1.8 16V	F4P 775	7700109151	5.5	11.07	40.6	A	B
8083.101	IN-EX	Laguna II Grandtour 2.0 16V	F4R 712	7700109151	5.5	11.07	40.6	A	B
8083.101	IN-EX	Laguna II Grandtour 2.0 16V	F4R 713	7700109151	5.5	11.07	40.6	A	B
8083.101	IN-EX	Laguna II Grandtour 2.0 16V	F4R 714	7700109151	5.5	11.07	40.6	A	B
8083.101	IN-EX	Laguna II Grandtour 2.0 16V	F4R 715	7700109151	5.5	11.07	40.6	A	B
8083.101	IN-EX	Laguna II Grandtour 2.0 16V	F4R 784	7700109151	5.5	11.07	40.6	A	B
8083.101	IN-EX	Laguna II Grandtour 2.0 16V	F4R 786	7700109151	5.5	11.07	40.6	A	B
8083.101	IN-EX	Laguna II Grandtour 2.0 16V	F4R 787	7700109151	5.5	11.07	40.6	A	B
8083.101	IN-EX	Laguna II Grandtour 2.0 16V	F4R 886	7700109151	5.5	11.07	40.6	A	B
8083.101	IN-EX	Laguna II Grandtour 2.0 16V	F4R 887	7700109151	5.5	11.07	40.6	A	B
8083.101	IN-EX	Laguna II Grandtour 2.0 16V Turb	F4R 764	7700109151	5.5	11.07	40.6	A	B
8083.101	IN-EX	Laguna II Grandtour 2.0 16V Turb	F4R 765	7700109151	5.5	11.07	40.6	A	B
8083.101	IN-EX	Laguna II Grandtour 2.0 16V Turb	F4R 786	7700109151	5.5	11.07	40.6	A	B
8083.101	IN-EX	Laguna II Grandtour 2.0 16V Turb	F4R 787	7700109151	5.5	11.07	40.6	A	B
8035.601	IN-EX	LAGUNA III (BT0/1), 1.5 dCi (BT0	K9K 780		6.0	11.07	40.5	F	B
8083.101	IN-EX	Laguna III 2.0 16V Turbo	F4R 811	7700109151	5.5	11.07	40.6	A	B
8083.101	IN-EX	Laguna III 2.0 16V Turbo	F4R 813	7700109151	5.5	11.07	40.6	A	B
8083.101	IN-EX	Laguna III 2.0 GT	F4R 800	7700109151	5.5	11.07	40.6	A	B
8083.101	IN-EX	Laguna III 2.0 GT	F4R 813	7700109151	5.5	11.07	40.6	A	B
8035.601	IN-EX	LAGUNA III Grandtour (KT0/1), 1.	K9K 780		6.0	11.07	40.5	F	B
8083.101	IN-EX	Laguna III Grandtour 2.0 16V Turb	F4R 811	7700109151	5.5	11.07	40.6	A	B
8083.101	IN-EX	Laguna III Grandtour 2.0 16V Turb	F4R 813	7700109151	5.5	11.07	40.6	A	B
8083.101	IN-EX	Laguna III Grandtour 2.0 GT	F4R 800	7700109151	5.5	11.07	40.6	A	B
8083.101	IN-EX	Laguna III Grandtour 2.0 GT	F4R 813	7700109151	5.5	11.07	40.6	A	B
8177.601	EX	LOGAN (LS_), 1.4 (LSOA, LSOC,	K7J 710		7.0	12.06	19.0	F	B
8177.601	EX	LOGAN (LS_), 1.4 MPI LPG (LS0	K7J 714/K7J 710		7.0	12.06	19.0	F	B
8177.601	EX	LOGAN (LS_), 1.6 (LSOB, LSOD,	K7M 710		7.0	12.06	19.0	F	B

(D1) Internal diameter, (D2) External diameter, (B) Shape, (C) Material

VALVE GUIDES

IVT Ref.	Type	Model	Engine	OEM Ref.	D1	D2	Length	B	C
RENAULT									
8177.601	EX	LOGAN I (LS_), 1.4	K7J 710		7.0	12.06	19.0	F	B
8195.601	IN	LOGAN I (LS_), 1.4	K7J 710		7.0	12.06	42.0	F	B
8035.601	IN-EX	LOGAN I (LS_), 1.5 dCi	K9K 792		6.0	11.07	40.5	F	B
8035.601	IN-EX	LOGAN I (LS_), 1.5 dCi	K9K 796		6.0	11.07	40.5	F	B
8177.601	EX	LOGAN I (LS_), 1.6	K7M 710		7.0	12.06	19.0	F	B
8195.601	IN	LOGAN I (LS_), 1.6	K7M 710		7.0	12.06	42.0	F	B
8177.601	EX	LOGAN I Kombi (KS_), 1.4	K7J 710		7.0	12.06	19.0	F	B
8195.601	IN	LOGAN I Kombi (KS_), 1.4	K7J 710		7.0	12.06	42.0	F	B
8035.601	IN-EX	LOGAN I Kombi (KS_), 1.5 dCi	K9K 792		6.0	11.07	40.5	F	B
8035.601	IN-EX	LOGAN I Kombi (KS_), 1.5 dCi	K9K 796		6.0	11.07	40.5	F	B
8177.601	EX	LOGAN I Kombi (KS_), 1.6	K7M 710		7.0	12.06	19.0	F	B
8195.601	IN	LOGAN I Kombi (KS_), 1.6	K7M 710		7.0	12.06	42.0	F	B
8177.601	EX	LOGAN MCV (KS_), 1.4	K7J 710		7.0	12.06	19.0	F	B
8177.601	EX	LOGAN MCV (KS_), 1.6	K7M 710		7.0	12.06	19.0	F	B
8095.600	IN-EX	Master I 2.4 D	S8U 730	4749395	8.0	13.03	56.0	F	G1
8095.600	IN-EX	Master I 2.5 DT	S8U 740	4749395	8.0	13.03	56.0	F	G1
8095.600	IN-EX	Master I 2.5 DT	S9U 702	4749395	8.0	13.03	56.0	F	G1
8095.600	IN-EX	Master I Autobus 2.4 D	S8U 731	4749395	8.0	13.03	56.0	F	G1
8095.600	IN-EX	Master I Autobus 28-35 2.4 D	8140.61.2300	4749395	8.0	13.03	56.0	F	G1
8095.600	IN-EX	Master I Autobus 28-35 2.4 D	S8U 731	4749395	8.0	13.03	56.0	F	G1
8095.600	IN-EX	Master I Autobus 28-35 2.5 D	S8U 742	4749395	8.0	13.03	56.0	F	G1
8095.600	IN-EX	Master I Autobus 28-35 2.5 TD	8140.27.2580	4749395	8.0	13.03	56.0	F	G1
8095.600	IN-EX	Master I Autobus 28-35 2.5 TD	S9U 702	4749395	8.0	13.03	56.0	F	G1
8095.600	IN-EX	Master I Autobus 35 2.5 TD	8140.27.2500	4749395	8.0	13.03	56.0	F	G1
8095.600	IN-EX	Master I Autobus 35 2.5 TD	8140.27.2510	4749395	8.0	13.03	56.0	F	G1
8095.600	IN-EX	Master I Autobus 35 2.5 TD	S9U 714	4749395	8.0	13.03	56.0	F	G1
8141.100	IN-EX	MASTER I Bus (T__), 2.4 D	S8U 731	4726483	8.0	13.03	60.0	A	G1
8141.100	IN-EX	MASTER I Bus (T__), 28-35 2,5 T	8140.27.2580/S9U 702	4726483	8.0	13.03	60.0	A	G1
8141.100	IN-EX	MASTER I Bus (T__), 28-35 2.4 D	8140.61.2300/S8U 731	4726483	8.0	13.03	60.0	A	G1
8141.100	IN-EX	MASTER I Bus (T__), 28-35 2.5 D	8140.67.2510/S8U 742	4726483	8.0	13.03	60.0	A	G1
8141.100	IN-EX	MASTER I Bus (T__), 35 2,5 TD	8140.27.2500/S9U 714/8140.	4726483	8.0	13.03	60.0	A	G1
8095.600	IN-EX	Master I Furgonato 2.4 D	S8U 730	4749395	8.0	13.03	56.0	F	G1
8095.600	IN-EX	Master I Furgonato 28-35 2.4 D	8140.61.2300	4749395	8.0	13.03	56.0	F	G1
8095.600	IN-EX	Master I Furgonato 28-35 2.4 D	S8U 731	4749395	8.0	13.03	56.0	F	G1
8095.600	IN-EX	Master I Furgonato 28-35 2.5 D	S8U 742	4749395	8.0	13.03	56.0	F	G1
8095.600	IN-EX	Master I Furgonato 28-35 2.5 TD	8140.27.2580	4749395	8.0	13.03	56.0	F	G1
8095.600	IN-EX	Master I Furgonato 28-35 2.5 TD	S9U 702	4749395	8.0	13.03	56.0	F	G1
8095.600	IN-EX	Master I Furgonato 35 2.5 TD	8140.27.2500	4749395	8.0	13.03	56.0	F	G1
8095.600	IN-EX	Master I Furgonato 35 2.5 TD	8140.27.2510	4749395	8.0	13.03	56.0	F	G1
8095.600	IN-EX	Master I Furgonato 35 2.5 TD	S9U 714	4749395	8.0	13.03	56.0	F	G1
8141.100	IN-EX	MASTER I Kasten (T__), 2.4 D	S8U 730	4726483	8.0	13.03	60.0	A	G1
8141.100	IN-EX	MASTER I Kasten (T__), 2.4 D	S8U 730	4726483	8.0	13.03	60.0	A	G1
8141.100	IN-EX	MASTER I Kasten (T__), 2.4 D	S8U 731	4726483	8.0	13.03	60.0	A	G1
8141.100	IN-EX	MASTER I Kasten (T__), 28-35 2,	8140.67.2510/S8U 742	4726483	8.0	13.03	60.0	A	G1
8141.100	IN-EX	MASTER I Kasten (T__), 28-35 2,	8140.27.2580/S9U 702	4726483	8.0	13.03	60.0	A	G1
8141.100	IN-EX	MASTER I Kasten (T__), 28-35 2.	8140.61.2300/S8U 731	4726483	8.0	13.03	60.0	A	G1
8141.100	IN-EX	MASTER I Kasten (T__), 35 2,5 T	8140.27.2500/S9U 714/8140.	4726483	8.0	13.03	60.0	A	G1
8141.100	IN-EX	MASTER I Pritsche/Fahrgestell (P	S8U 730	4726483	8.0	13.03	60.0	A	G1
8141.100	IN-EX	MASTER I Pritsche/Fahrgestell (P	S9U 702	4726483	8.0	13.03	60.0	A	G1
8141.100	IN-EX	MASTER I Pritsche/Fahrgestell (P	S9U 740	4726483	8.0	13.03	60.0	A	G1
8141.100	IN-EX	MASTER I Pritsche/Fahrgestell (P	8140.61.2300/S8U 731	4726483	8.0	13.03	60.0	A	G1
8095.600	IN-EX	Master II 2.5 D	8144.67.2500	4749395	8.0	13.03	56.0	F	G1
8095.600	IN-EX	Master II 2.5 D	S8U 770	4749395	8.0	13.03	56.0	F	G1
8095.600	IN-EX	Master II 2.8 dTI	8140.43.2609	4749395	8.0	13.03	56.0	F	G1
8095.600	IN-EX	Master II 2.8 dTI	8140.43.2620	4749395	8.0	13.03	56.0	F	G1
8095.600	IN-EX	Master II 2.8 dTI	8140.43.2629	4749395	8.0	13.03	56.0	F	G1
8095.600	IN-EX	Master II 2.8 dTI	8140.43.2639	4749395	8.0	13.03	56.0	F	G1
8095.600	IN-EX	Master II 2.8 dTI	S9W 702	4749395	8.0	13.03	56.0	F	G1
8069.601	IN-EX	Master II Autobus 1.9 dCi 80	F9Q 772	7700859086	7.0	12.06	38.3	F-1	B
8069.601	IN-EX	Master II Autobus 1.9 dCi 80	F9Q 772	M889393	7.0	12.06	38.3	F-1	B
8069.601	IN-EX	Master II Autobus 1.9 dCi 80	F9Q 774	7700859086	7.0	12.06	38.3	F-1	B
8069.601	IN-EX	Master II Autobus 1.9 dCi 80	F9Q 774	M889393	7.0	12.06	38.3	F-1	B

(D1) Internal diameter, (D2) External diameter, (B) Shape, (C) Material

VALVE GUIDES

IVT Ref.	Type	Model	Engine	OEM Ref.	D1	D2	Length	B	C
RENAULT									
8069.601	IN-EX	Master II Autobus 1.9 dTi	F9Q 770	7700859086	7.0	12.06	38.3	F-1	B
8069.601	IN-EX	Master II Autobus 1.9 dTi	F9Q 770	M889393	7.0	12.06	38.3	F-1	B
8095.600	IN-EX	Master II Autobus 2.5 D	8144.67.2500	4749395	8.0	13.03	56.0	F	G1
8095.600	IN-EX	Master II Autobus 2.5 D	S8U 770	4749395	8.0	13.03	56.0	F	G1
8095.600	IN-EX	Master II Autobus 2.8 dTI	8140.43.2609	4749395	8.0	13.03	56.0	F	G1
8095.600	IN-EX	Master II Autobus 2.8 dTI	8140.43.2620	4749395	8.0	13.03	56.0	F	G1
8095.600	IN-EX	Master II Autobus 2.8 dTI	8140.43.2629	4749395	8.0	13.03	56.0	F	G1
8095.600	IN-EX	Master II Autobus 2.8 dTI	8140.43.2639	4749395	8.0	13.03	56.0	F	G1
8095.600	IN-EX	Master II Autobus 2.8 dTI	S9W 702	4749395	8.0	13.03	56.0	F	G1
8157.601	IN-EX	MASTER II Bus (JD), 2.2 dCI 90	G9T 722/G9T 720/G9T 750	8200562080	6.0	11.07	40.5	F	B
8141.100	IN-EX	MASTER II Bus (JD), 2.5 D	S8U 770	4726483	8.0	13.03	60.0	A	G1
8157.601	IN-EX	MASTER II Bus (JD), 2.5 dCi 100	G9U 754	8200562080	6.0	11.07	40.5	F	B
8157.601	IN-EX	MASTER II Bus (JD), 2.5 dCi 120	G9U 754/G9U 750/G9U 720	8200562080	6.0	11.07	40.5	F	B
8141.100	IN-EX	MASTER II Bus (JD), 2.8 dTI	S9W 702	4726483	8.0	13.03	60.0	A	G1
8069.601	IN-EX	Master II Furgonato 1.9 dCi 80	F9Q 772	7700859086	7.0	12.06	38.3	F-1	B
8069.601	IN-EX	Master II Furgonato 1.9 dCi 80	F9Q 772	M889393	7.0	12.06	38.3	F-1	B
8069.601	IN-EX	Master II Furgonato 1.9 dCi 80	F9Q 774	7700859086	7.0	12.06	38.3	F-1	B
8069.601	IN-EX	Master II Furgonato 1.9 dCi 80	F9Q 774	M889393	7.0	12.06	38.3	F-1	B
8069.601	IN-EX	Master II Furgonato 1.9 dTi	F9Q 770	7700859086	7.0	12.06	38.3	F-1	B
8069.601	IN-EX	Master II Furgonato 1.9 dTi	F9Q 770	M889393	7.0	12.06	38.3	F-1	B
8095.600	IN-EX	Master II Furgonato 2.5 D	8144.67.2500	4749395	8.0	13.03	56.0	F	G1
8095.600	IN-EX	Master II Furgonato 2.5 D	S8U 770	4749395	8.0	13.03	56.0	F	G1
8095.600	IN-EX	Master II Furgonato 2.8 dTI	8140.43.2609	4749395	8.0	13.03	56.0	F	G1
8095.600	IN-EX	Master II Furgonato 2.8 dTI	8140.43.2620	4749395	8.0	13.03	56.0	F	G1
8095.600	IN-EX	Master II Furgonato 2.8 dTI	8140.43.2629	4749395	8.0	13.03	56.0	F	G1
8095.600	IN-EX	Master II Furgonato 2.8 dTI	8140.43.2639	4749395	8.0	13.03	56.0	F	G1
8095.600	IN-EX	Master II Furgonato 2.8 dTI	S9W 702	4749395	8.0	13.03	56.0	F	G1
8157.601	IN-EX	MASTER II Kasten (FD), 2.2 dCI 9	G9T 722/G9T 720/G9T 750	8200562080	6.0	11.07	40.5	F	B
8141.100	IN-EX	MASTER II Kasten (FD), 2.5 D	S8U 770	4726483	8.0	13.03	60.0	A	G1
8157.601	IN-EX	MASTER II Kasten (FD), 2.5 dCi 1	G9U 754	8200562080	6.0	11.07	40.5	F	B
8157.601	IN-EX	MASTER II Kasten (FD), 2.5 dCi 1	G9U 754/G9U 750/G9U 724/	8200562080	6.0	11.07	40.5	F	B
8141.100	IN-EX	MASTER II Kasten (FD), 2.8 dTI	S9W 702	4726483	8.0	13.03	60.0	A	G1
8157.601	IN-EX	MASTER II Pritsche/Fahrgestell (	G9T 722/G9T 720/G9T 750	8200562080	6.0	11.07	40.5	F	B
8141.100	IN-EX	MASTER II Pritsche/Fahrgestell (	S8U 770	4726483	8.0	13.03	60.0	A	G1
8157.601	IN-EX	MASTER II Pritsche/Fahrgestell (	G9U 754	8200562080	6.0	11.07	40.5	F	B
8157.601	IN-EX	MASTER II Pritsche/Fahrgestell (	G9U 754/G9U 750/G9U 724/	8200562080	6.0	11.07	40.5	F	B
8141.100	IN-EX	MASTER II Pritsche/Fahrgestell (	S9W 702	4726483	8.0	13.03	60.0	A	G1
8177.601	EX	MEGANE I (BA0/1_), 1.4 e (BA0E	E7J 626/E7J 764		7.0	12.06	19.0	F	B
8195.601	IN	MEGANE I (BA0/1_), 1.4 e (BA0E	E7J 626/E7J 764		7.0	12.06	42.0	F	B
8177.601	EX	MEGANE I (BA0/1_), 1.4 Eco (BA	E7J 624		7.0	12.06	19.0	F	B
8195.601	IN	MEGANE I (BA0/1_), 1.4 Eco (BA	E7J 624		7.0	12.06	42.0	F	B
8177.601	EX	MEGANE I (BA0/1_), 1.6 i (BA0L)	K7M 720		7.0	12.06	19.0	F	B
8195.601	IN	MEGANE I (BA0/1_), 1.6 i (BA0L)	K7M 720		7.0	12.06	42.0	F	B
8135.601	IN-EX	MEGANE I (BA0/1_), 1.9 D Eco (B	F8Q 620/F8Q 624		8.0	13.1	39.0	F	B
8175.901	IN-EX	MEGANE I (BA0/1_), 2.0 i	F3R 751/F3R 750	7700868804	8.0	13.07	37.7	P	B
8175.901	IN-EX	MEGANE I (BA0/1_), 2.0 i (BA0G)	F3R 751/F3R 750	7700868804	8.0	13.07	37.7	P	B
8083.101	IN-EX	Megane I 1.8 16V	F4P 720	7700109151	5.5	11.07	40.6	A	B
8083.101	IN-EX	Megane I 1.8 16V	F4P 722	7700109151	5.5	11.07	40.6	A	B
8069.601	IN-EX	Megane I 1.9 dCi	F9Q 732	7700859086	7.0	12.06	38.3	F-1	B
8069.601	IN-EX	Megane I 1.9 dCi	F9Q 732	M889393	7.0	12.06	38.3	F-1	B
8069.601	IN-EX	Megane I 1.9 dCi	F9Q 733	7700859086	7.0	12.06	38.3	F-1	B
8069.601	IN-EX	Megane I 1.9 dCi	F9Q 733	M889393	7.0	12.06	38.3	F-1	B
8069.601	IN-EX	Megane I 1.9 dTi	F9Q 730	7700859086	7.0	12.06	38.3	F-1	B
8069.601	IN-EX	Megane I 1.9 dTi	F9Q 730	M889393	7.0	12.06	38.3	F-1	B
8069.601	IN-EX	Megane I 1.9 dTi	F9Q 731	7700859086	7.0	12.06	38.3	F-1	B
8069.601	IN-EX	Megane I 1.9 dTi	F9Q 731	M889393	7.0	12.06	38.3	F-1	B
8069.601	IN-EX	Megane I 1.9 dTi	F9Q 734	7700859086	7.0	12.06	38.3	F-1	B
8069.601	IN-EX	Megane I 1.9 dTi	F9Q 734	M889393	7.0	12.06	38.3	F-1	B
8069.601	IN-EX	Megane I 1.9 dTi	F9Q 736	7700859086	7.0	12.06	38.3	F-1	B
8069.601	IN-EX	Megane I 1.9 dTi	F9Q 736	M889393	7.0	12.06	38.3	F-1	B
8177.601	EX	MEGANE I Cabriolet (EA0/1_), 1.6	K7M 702/K7M 703		7.0	12.06	19.0	F	B
8195.601	IN	MEGANE I Cabriolet (EA0/1_), 1.6	K7M 702/K7M 703		7.0	12.06	42.0	F	B

(D1) Internal diameter, (D2) External diameter, (B) Shape, (C) Material

VALVE GUIDES

IVT Ref.	Type	Model	Engine	OEM Ref.	D1	D2	Length	B	C
RENAULT									
8175.901	IN-EX	MEGANE I Cabriolet (EA0/1_), 2.0	F3R 750	7700868804	8.0	13.07	37.7	P	B
8175.901	IN-EX	MEGANE I Cabriolet (EA0/1_), 2.0	F3R 791/F3R 796	7700868804	8.0	13.07	37.7	P	B
8083.101	IN-EX	Megane I Cabriolet 2.0 16V	F4R 746	7700109151	5.5	11.07	40.6	A	B
8083.101	IN-EX	Megane I Cabriolet 2.0 16V	F4R 770	7700109151	5.5	11.07	40.6	A	B
8177.601	EX	MEGANE I Classic (LA0/1_), 1.4 (	E7J 626/E7J 764		7.0	12.06	19.0	F	B
8195.601	IN	MEGANE I Classic (LA0/1_), 1.4 (	E7J 626/E7J 764		7.0	12.06	42.0	F	B
8177.601	EX	MEGANE I Classic (LA0/1_), 1.6 e	K7M 702/K7M 703/K7M 790		7.0	12.06	19.0	F	B
8195.601	IN	MEGANE I Classic (LA0/1_), 1.6 e	K7M 702/K7M 703/K7M 790		7.0	12.06	42.0	F	B
8177.601	EX	MEGANE I Classic (LA0/1_), 1.6 i	K7M 720		7.0	12.06	19.0	F	B
8195.601	IN	MEGANE I Classic (LA0/1_), 1.6 i	K7M 720		7.0	12.06	42.0	F	B
8135.601	IN-EX	MEGANE I Classic (LA0/1_), 1.9 d	F9Q 744		8.0	13.1	39.0	F	B
8175.901	IN-EX	MEGANE I Classic (LA0/1_), 2.0 i	F3R 791/F3R 751/F3R 797/F	7700868804	8.0	13.07	37.7	P	B
8175.901	IN-EX	MEGANE I Classic (LA0/1_), 2.0 i	F3R 791/F3R 751/F3R 797/F	7700868804	8.0	13.07	37.7	P	B
8083.101	IN-EX	Megane I Classic 1.8 16V	F4P 720	7700109151	5.5	11.07	40.6	A	B
8083.101	IN-EX	Megane I Classic 1.8 16V	F4P 722	7700109151	5.5	11.07	40.6	A	B
8069.601	IN-EX	Megane I Classic 1.9 dCi	F9Q 732	7700859086	7.0	12.06	38.3	F-1	B
8069.601	IN-EX	Megane I Classic 1.9 dCi	F9Q 732	M889393	7.0	12.06	38.3	F-1	B
8069.601	IN-EX	Megane I Classic 1.9 dCi	F9Q 733	7700859086	7.0	12.06	38.3	F-1	B
8069.601	IN-EX	Megane I Classic 1.9 dCi	F9Q 733	M889393	7.0	12.06	38.3	F-1	B
8069.601	IN-EX	Megane I Classic 1.9 dCi	F9Q 738	7700859086	7.0	12.06	38.3	F-1	B
8069.601	IN-EX	Megane I Classic 1.9 dCi	F9Q 738	M889393	7.0	12.06	38.3	F-1	B
8069.601	IN-EX	Megane I Classic 1.9 dTi	F9Q 730	7700859086	7.0	12.06	38.3	F-1	B
8069.601	IN-EX	Megane I Classic 1.9 dTi	F9Q 730	M889393	7.0	12.06	38.3	F-1	B
8069.601	IN-EX	Megane I Classic 1.9 dTi	F9Q 731	7700859086	7.0	12.06	38.3	F-1	B
8069.601	IN-EX	Megane I Classic 1.9 dTi	F9Q 731	M889393	7.0	12.06	38.3	F-1	B
8069.601	IN-EX	Megane I Classic 1.9 dTi	F9Q 734	7700859086	7.0	12.06	38.3	F-1	B
8069.601	IN-EX	Megane I Classic 1.9 dTi	F9Q 734	M889393	7.0	12.06	38.3	F-1	B
8069.601	IN-EX	Megane I Classic 1.9 dTi	F9Q 736	7700859086	7.0	12.06	38.3	F-1	B
8069.601	IN-EX	Megane I Classic 1.9 dTi	F9Q 736	M889393	7.0	12.06	38.3	F-1	B
8069.601	IN-EX	Megane I Classic 1.9 dTi	F9Q 744	7700859086	7.0	12.06	38.3	F-1	B
8069.601	IN-EX	Megane I Classic 1.9 dTi	F9Q 744	M889393	7.0	12.06	38.3	F-1	B
8177.601	EX	MEGANE I Coach (DA0/1_), 1.6 e	K7M 702/K7M 703		7.0	12.06	19.0	F	B
8195.601	IN	MEGANE I Coach (DA0/1_), 1.6 e	K7M 702/K7M 703		7.0	12.06	42.0	F	B
8175.901	IN-EX	MEGANE I Coach (DA0/1_), 2.0 i	F3R 791/F3R 796	7700868804	8.0	13.07	37.7	P	B
8175.901	IN-EX	MEGANE I Coach (DA0/1_), 2.0 i	F3R 751/F3R 750	7700868804	8.0	13.07	37.7	P	B
8069.601	IN-EX	Megane I Coach 1.9 dCi	F9Q 732	7700859086	7.0	12.06	38.3	F-1	B
8069.601	IN-EX	Megane I Coach 1.9 dCi	F9Q 732	M889393	7.0	12.06	38.3	F-1	B
8069.601	IN-EX	Megane I Coach 1.9 dCi	F9Q 733	7700859086	7.0	12.06	38.3	F-1	B
8069.601	IN-EX	Megane I Coach 1.9 dCi	F9Q 733	M889393	7.0	12.06	38.3	F-1	B
8069.601	IN-EX	Megane I Coach 1.9 dTi	F9Q 731	7700859086	7.0	12.06	38.3	F-1	B
8069.601	IN-EX	Megane I Coach 1.9 dTi	F9Q 731	M889393	7.0	12.06	38.3	F-1	B
8069.601	IN-EX	Megane I Coach 1.9 dTi	F9Q 734	7700859086	7.0	12.06	38.3	F-1	B
8069.601	IN-EX	Megane I Coach 1.9 dTi	F9Q 734	M889393	7.0	12.06	38.3	F-1	B
8069.601	IN-EX	Megane I Coach 1.9 dTi	F9Q 736	7700859086	7.0	12.06	38.3	F-1	B
8069.601	IN-EX	Megane I Coach 1.9 dTi	F9Q 736	M889393	7.0	12.06	38.3	F-1	B
8083.101	IN-EX	Megane I Coach 2.0 16V	F4R 746	7700109151	5.5	11.07	40.6	A	B
8069.601	IN-EX	Megane I Grand Tour 1.9 dCi	F9Q 732	7700859086	7.0	12.06	38.3	F-1	B
8069.601	IN-EX	Megane I Grand Tour 1.9 dCi	F9Q 732	M889393	7.0	12.06	38.3	F-1	B
8069.601	IN-EX	Megane I Grand Tour 1.9 dCi	F9Q 733	7700859086	7.0	12.06	38.3	F-1	B
8069.601	IN-EX	Megane I Grand Tour 1.9 dCi	F9Q 733	M889393	7.0	12.06	38.3	F-1	B
8069.601	IN-EX	Megane I Grand Tour 1.9 dCi	F9Q 738	7700859086	7.0	12.06	38.3	F-1	B
8069.601	IN-EX	Megane I Grand Tour 1.9 dCi	F9Q 738	M889393	7.0	12.06	38.3	F-1	B
8069.601	IN-EX	Megane I Grand Tour 1.9 dTi	F9Q 731	7700859086	7.0	12.06	38.3	F-1	B
8069.601	IN-EX	Megane I Grand Tour 1.9 dTi	F9Q 731	M889393	7.0	12.06	38.3	F-1	B
8069.601	IN-EX	Megane I Grand Tour 1.9 dTi	F9Q 736	7700859086	7.0	12.06	38.3	F-1	B
8069.601	IN-EX	Megane I Grand Tour 1.9 dTi	F9Q 736	M889393	7.0	12.06	38.3	F-1	B
8177.601	EX	MEGANE I Grandtour (KA0/1_), 1.	E7J 626		7.0	12.06	19.0	F	B
8195.601	IN	MEGANE I Grandtour (KA0/1_), 1.	E7J 626		7.0	12.06	42.0	F	B
8177.601	EX	MEGANE I Grandtour (KA0/1_), 1.	K7M 702/K7M 703		7.0	12.06	19.0	F	B
8195.601	IN	MEGANE I Grandtour (KA0/1_), 1.	K7M 702/K7M 703		7.0	12.06	42.0	F	B
8083.101	IN-EX	Megane I Grandtour 1.8 16V	F4P 720	7700109151	5.5	11.07	40.6	A	B
8083.101	IN-EX	Megane I Grandtour 1.8 16V	F4P 722	7700109151	5.5	11.07	40.6	A	B

(D1) Internal diameter, (D2) External diameter, (B) Shape, (C) Material

VALVE GUIDES

RENAULT

IVT Ref.	Type	Model	Engine	OEM Ref.	D1	D2	Length	B	C
8035.601	IN-EX	MEGANE II (BM0/1_, CM0/1_), 1.	K9K 724		6.0	11.07	40.5	F	B
8035.601	IN-EX	MEGANE II (BM0/1_, CM0/1_), 1.	K9K 729/K9K 728		6.0	11.07	40.5	F	B
8035.601	IN-EX	MEGANE II (BM0/1_, CM0/1_), 1.	K9K 734/K9K 732		6.0	11.07	40.5	F	B
8035.601	IN-EX	MEGANE II (BM0/1_, CM0/1_), 1.	K9K 722		6.0	11.07	40.5	F	B
8069.601	IN-EX	Megane II 1.9 dCi	F9Q 800	7700859086	7.0	12.06	38.3	F-1	B
8069.601	IN-EX	Megane II 1.9 dCi	F9Q 800	M889393	7.0	12.06	38.3	F-1	B
8069.601	IN-EX	Megane II 1.9 dCi	F9Q 803	7700859086	7.0	12.06	38.3	F-1	B
8069.601	IN-EX	Megane II 1.9 dCi	F9Q 803	M889393	7.0	12.06	38.3	F-1	B
8069.601	IN-EX	Megane II 1.9 dCi	F9Q 804	7700859086	7.0	12.06	38.3	F-1	B
8069.601	IN-EX	Megane II 1.9 dCi	F9Q 804	M889393	7.0	12.06	38.3	F-1	B
8069.601	IN-EX	Megane II 1.9 dCi	F9Q 808	7700859086	7.0	12.06	38.3	F-1	B
8069.601	IN-EX	Megane II 1.9 dCi	F9Q 808	M889393	7.0	12.06	38.3	F-1	B
8069.601	IN-EX	Megane II 1.9 dCi	F9Q 812	7700859086	7.0	12.06	38.3	F-1	B
8069.601	IN-EX	Megane II 1.9 dCi	F9Q 812	M889393	7.0	12.06	38.3	F-1	B
8069.601	IN-EX	Megane II 1.9 dCi	F9Q 818	7700859086	7.0	12.06	38.3	F-1	B
8069.601	IN-EX	Megane II 1.9 dCi	F9Q 818	M889393	7.0	12.06	38.3	F-1	B
8083.101	IN-EX	Megane II 2.0 16V	F4R 770	7700109151	5.5	11.07	40.6	A	B
8083.101	IN-EX	Megane II 2.0 16V	F4R 774	7700109151	5.5	11.07	40.6	A	B
8083.101	IN-EX	Megane II 2.0 Renault Sport	F4R 774	7700109151	5.5	11.07	40.6	A	B
8083.101	IN-EX	Megane II 2.0 Renault Sport	F4R t 774	7700109151	5.5	11.07	40.6	A	B
8035.601	IN-EX	MEGANE II Coupé-Cabriolet (EM	K9K 732		6.0	11.07	40.5	F	B
8069.601	IN-EX	Megane II Coupé-Cabriolet 1.9 dC	F9Q 800	7700859086	7.0	12.06	38.3	F-1	B
8069.601	IN-EX	Megane II Coupé-Cabriolet 1.9 dC	F9Q 800	M889393	7.0	12.06	38.3	F-1	B
8069.601	IN-EX	Megane II Coupé-Cabriolet 1.9 dC	F9Q 803	7700859086	7.0	12.06	38.3	F-1	B
8069.601	IN-EX	Megane II Coupé-Cabriolet 1.9 dC	F9Q 803	M889393	7.0	12.06	38.3	F-1	B
8069.601	IN-EX	Megane II Coupé-Cabriolet 1.9 dC	F9Q 804	7700859086	7.0	12.06	38.3	F-1	B
8069.601	IN-EX	Megane II Coupé-Cabriolet 1.9 dC	F9Q 804	M889393	7.0	12.06	38.3	F-1	B
8069.601	IN-EX	Megane II Coupé-Cabriolet 1.9 dC	F9Q 816	7700859086	7.0	12.06	38.3	F-1	B
8069.601	IN-EX	Megane II Coupé-Cabriolet 1.9 dC	F9Q 816	M889393	7.0	12.06	38.3	F-1	B
8069.601	IN-EX	Megane II Coupé-Cabriolet 1.9 dC	F9Q 818	7700859086	7.0	12.06	38.3	F-1	B
8069.601	IN-EX	Megane II Coupé-Cabriolet 1.9 dC	F9Q 818	M889393	7.0	12.06	38.3	F-1	B
8083.101	IN-EX	Megane II Coupé-Cabriolet 2.0	F4R 770	7700109151	5.5	11.07	40.6	A	B
8083.101	IN-EX	Megane II Coupé-Cabriolet 2.0	F4R 771	7700109151	5.5	11.07	40.6	A	B
8083.101	IN-EX	Megane II Coupé-Cabriolet 2.0 16	F4R 776	7700109151	5.5	11.07	40.6	A	B
8035.601	IN-EX	MEGANE II Kombi (KM0/1_), 1.5	K9K 722		6.0	11.07	40.5	F	B
8035.601	IN-EX	MEGANE II Kombi (KM0/1_), 1.5	K9K 724		6.0	11.07	40.5	F	B
8035.601	IN-EX	MEGANE II Kombi (KM0/1_), 1.5	K9K 729/K9K 728		6.0	11.07	40.5	F	B
8035.601	IN-EX	MEGANE II Kombi (KM0/1_), 1.5	K9K 734/K9K 732		6.0	11.07	40.5	F	B
8035.601	IN-EX	MEGANE II Stufenheck (LM0/1_),	K9K 722		6.0	11.07	40.5	F	B
8035.601	IN-EX	MEGANE II Stufenheck (LM0/1_),	K9K 724		6.0	11.07	40.5	F	B
8035.601	IN-EX	MEGANE II Stufenheck (LM0/1_),	K9K 729/K9K 728		6.0	11.07	40.5	F	B
8035.601	IN-EX	MEGANE II Stufenheck (LM0/1_),	K9K 732		6.0	11.07	40.5	F	B
8069.601	IN-EX	Megane II SW 1.9 dCi	F9Q 800	7700859086	7.0	12.06	38.3	F-1	B
8069.601	IN-EX	Megane II SW 1.9 dCi	F9Q 800	M889393	7.0	12.06	38.3	F-1	B
8069.601	IN-EX	Megane II SW 1.9 dCi	F9Q 803	7700859086	7.0	12.06	38.3	F-1	B
8069.601	IN-EX	Megane II SW 1.9 dCi	F9Q 803	M889393	7.0	12.06	38.3	F-1	B
8069.601	IN-EX	Megane II SW 1.9 dCi	F9Q 804	7700859086	7.0	12.06	38.3	F-1	B
8069.601	IN-EX	Megane II SW 1.9 dCi	F9Q 804	M889393	7.0	12.06	38.3	F-1	B
8069.601	IN-EX	Megane II SW 1.9 dCi	F9Q 808	7700859086	7.0	12.06	38.3	F-1	B
8069.601	IN-EX	Megane II SW 1.9 dCi	F9Q 808	M889393	7.0	12.06	38.3	F-1	B
8069.601	IN-EX	Megane II SW 1.9 dCi	F9Q 818	7700859086	7.0	12.06	38.3	F-1	B
8069.601	IN-EX	Megane II SW 1.9 dCi	F9Q 818	M889393	7.0	12.06	38.3	F-1	B
8083.101	IN-EX	Megane II SW 2.0	F4R 770	7700109151	5.5	11.07	40.6	A	B
8083.101	IN-EX	Megane II SW 2.0	F4R 771	7700109151	5.5	11.07	40.6	A	B
8083.101	IN-EX	Megane II Tre Volumi 2.0	F4R 770	7700109151	5.5	11.07	40.6	A	B
8083.101	IN-EX	Megane II Tre Volumi 2.0	F4R 771	7700109151	5.5	11.07	40.6	A	B
8069.601	IN-EX	Megane II TreVolumi 1.9 dCi	F9Q 800	7700859086	7.0	12.06	38.3	F-1	B
8069.601	IN-EX	Megane II TreVolumi 1.9 dCi	F9Q 800	M889393	7.0	12.06	38.3	F-1	B
8069.601	IN-EX	Megane II TreVolumi 1.9 dCi	F9Q 803	7700859086	7.0	12.06	38.3	F-1	B
8069.601	IN-EX	Megane II TreVolumi 1.9 dCi	F9Q 803	M889393	7.0	12.06	38.3	F-1	B
8069.601	IN-EX	Megane II TreVolumi 1.9 dCi	F9Q 804	7700859086	7.0	12.06	38.3	F-1	B
8069.601	IN-EX	Megane II TreVolumi 1.9 dCi	F9Q 804	M889393	7.0	12.06	38.3	F-1	B

(D1) Internal diameter, (D2) External diameter, (B) Shape, (C) Material

VALVE GUIDES

IVT Ref.	Type	Model	Engine	OEM Ref.	D1	D2	Length	B	C
RENAULT									
8069.601	IN-EX	Megane II TreVolumi 1.9 dCi	F9Q 808	7700859086	7.0	12.06	38.3	F-1	B
8069.601	IN-EX	Megane II TreVolumi 1.9 dCi	F9Q 808	M889393	7.0	12.06	38.3	F-1	B
8069.601	IN-EX	Megane II TreVolumi 1.9 dCi	F9Q 816	7700859086	7.0	12.06	38.3	F-1	B
8069.601	IN-EX	Megane II TreVolumi 1.9 dCi	F9Q 816	M889393	7.0	12.06	38.3	F-1	B
8069.601	IN-EX	Megane II TreVolumi 1.9 dCi	F9Q 818	7700859086	7.0	12.06	38.3	F-1	B
8069.601	IN-EX	Megane II TreVolumi 1.9 dCi	F9Q 818	M889393	7.0	12.06	38.3	F-1	B
8177.601	EX	MEGANE Scenic (JA0/1_), 1.4 i (J	E7J 764		7.0	12.06	19.0	F	B
8195.601	IN	MEGANE Scenic (JA0/1_), 1.4 i (J	E7J 764		7.0	12.06	42.0	F	B
8177.601	EX	MEGANE Scenic (JA0/1_), 1.6 e (	K7M 702/K7M 703		7.0	12.06	19.0	F	B
8195.601	IN	MEGANE Scenic (JA0/1_), 1.6 e (	K7M 702/K7M 703		7.0	12.06	42.0	F	B
8177.601	EX	MEGANE Scenic (JA0/1_), 1.6 i (J	K7M 720		7.0	12.06	19.0	F	B
8195.601	IN	MEGANE Scenic (JA0/1_), 1.6 i (J	K7M 720		7.0	12.06	42.0	F	B
8135.601	IN-EX	MEGANE Scenic (JA0/1_), 1.9 D (	F8Q 790		8.0	13.1	39.0	F	B
8175.901	IN-EX	MEGANE Scenic (JA0/1_), 2.0 i (J	F3R 751/F3R 750	7700868804	8.0	13.07	37.7	P	B
8175.901	IN-EX	MEGANE Scenic (JA0/1_), 2.0 i (J	F3R 796	7700868804	8.0	13.07	37.7	P	B
8069.601	IN-EX	Megane Scenic 1.9 dTi	F9Q 730	7700859086	7.0	12.06	38.3	F-1	B
8069.601	IN-EX	Megane Scenic 1.9 dTi	F9Q 730	M889393	7.0	12.06	38.3	F-1	B
8069.601	IN-EX	Megane Scenic 1.9 dTi	F9Q 734	7700859086	7.0	12.06	38.3	F-1	B
8069.601	IN-EX	Megane Scenic 1.9 dTi	F9Q 734	M889393	7.0	12.06	38.3	F-1	B
8035.601	IN-EX	MODUS / GRAND MODUS (F/JP	K9K 750		6.0	11.07	40.5	F	B
8035.601	IN-EX	MODUS / GRAND MODUS (F/JP	K9K 752		6.0	11.07	40.5	F	B
8035.601	IN-EX	MODUS / GRAND MODUS (F/JP	K9K 766/K9K 760		6.0	11.07	40.5	F	B
8035.601	IN-EX	MODUS / GRAND MODUS (F/JP	K9K 768/K9K 762		6.0	11.07	40.5	F	B
8035.601	IN-EX	MODUS / GRAND MODUS (F/JP	K9K 772		6.0	11.07	40.5	F	B
8035.601	IN-EX	MODUS / GRAND MODUS (F/JP	K9K 764		6.0	11.07	40.5	F	B
8143.601	IN-EX	RAPID Kasten (F40_, G40_), 1.4	E7J 773	022084	7.0	13.07	48.5	F	B
8177.601	EX	RAPID Kasten (F40_, G40_), 1.4 (	C3J 762/C3J 700/C3J 702/C		7.0	12.06	19.0	F	B
8195.601	IN	RAPID Kasten (F40_, G40_), 1.4 (	C3J 762/C3J 700/C3J 702/C		7.0	12.06	42.0	F	B
8143.601	IN-EX	RAPID Kasten (F40_, G40_), 1.4 (	E7J 728	022084	7.0	13.07	48.5	F	B
8177.601	EX	RAPID Kasten (F40_, G40_), 1.4 (	E7J 720/E7J 773/E7J 724/E7		7.0	12.06	19.0	F	B
8195.601	IN	RAPID Kasten (F40_, G40_), 1.4 (	E7J 720/E7J 773/E7J 724/E7		7.0	12.06	42.0	F	B
8135.601	IN-EX	RAPID Kasten (F40_, G40_), 1.6	F8M 730/F8M 760/F8M 736/		8.0	13.1	39.0	F	B
8135.601	IN-EX	RAPID Kasten (F40_, G40_), 1.9	F8Q 774/F8Q 646/F8Q 722/F		8.0	13.1	39.0	F	B
8175.901	IN-EX	RAPID Kasten (F40_, G40_), 1.9	F8Q 682/F8Q 640	7700868804	8.0	13.07	37.7	P	B
8141.100	IN-EX	SAFRANE I (B54_), 2.5 dT (B548)	S8U 763/S8U 762	4726483	8.0	13.03	60.0	A	G1
8134.601	IN-EX	SAFRANE I (B54_), 3.0 Biturbo 4x	Z7X 726	022072	8.0	13.07	45.0	F	B
8134.601	IN-EX	SAFRANE I (B54_), 3.0 V6 (B54B,	Z7X 721/Z7X 723/Z7X 753/Z	022072	8.0	13.07	45.0	F	B
8134.601	IN-EX	SAFRANE I (B54_), 3.0 V6 4x4 (B	Z7X 721/Z7X 723/Z7X 722	022072	8.0	13.07	45.0	F	B
8095.600	IN-EX	Safrane I 2.5 dT	S8U 762	4749395	8.0	13.03	56.0	F	G1
8095.600	IN-EX	Safrane I 2.5 dT	S8U 763	4749395	8.0	13.03	56.0	F	G1
8177.601	EX	SAFRANE II (B54_), 2.2 dT (B54	G8T 740		7.0	12.06	19.0	F	B
8195.601	IN	SAFRANE II (B54_), 2.2 dT (B54	G8T 740		7.0	12.06	42.0	F	B
8134.601	IN-EX	SAFRANE II (B54_), 3.0 V6 (B54	Z7X 755	022072	8.0	13.07	45.0	F	B
8083.101	IN-EX	Scenic I 1.8 16V	F4P 720	7700109151	5.5	11.07	40.6	A	B
8083.101	IN-EX	Scenic I 1.8 16V	F4P 722	7700109151	5.5	11.07	40.6	A	B
8083.101	IN-EX	Scenic I 1.8 4x4	F4P 722	7700109151	5.5	11.07	40.6	A	B
8069.601	IN-EX	Scenic I 1.9 dCi RX4	F9Q 740	7700859086	7.0	12.06	38.3	F-1	B
8069.601	IN-EX	Scenic I 1.9 dCi RX4	F9Q 740	M889393	7.0	12.06	38.3	F-1	B
8069.601	IN-EX	Scenic I 1.9 dTi	F9Q 731	7700859086	7.0	12.06	38.3	F-1	B
8069.601	IN-EX	Scenic I 1.9 dTi	F9Q 731	M889393	7.0	12.06	38.3	F-1	B
8069.601	IN-EX	Scenic I 1.9 dTi	F9Q 732	7700859086	7.0	12.06	38.3	F-1	B
8069.601	IN-EX	Scenic I 1.9 dTi	F9Q 732	M889393	7.0	12.06	38.3	F-1	B
8069.601	IN-EX	Scenic I 1.9 dTi	F9Q 733	7700859086	7.0	12.06	38.3	F-1	B
8069.601	IN-EX	Scenic I 1.9 dTi	F9Q 733	M889393	7.0	12.06	38.3	F-1	B
8069.601	IN-EX	Scenic I 1.9 dTi	F9Q 734	7700859086	7.0	12.06	38.3	F-1	B
8069.601	IN-EX	Scenic I 1.9 dTi	F9Q 734	M889393	7.0	12.06	38.3	F-1	B
8069.601	IN-EX	Scenic I 1.9 dTi	F9Q 736	7700859086	7.0	12.06	38.3	F-1	B
8069.601	IN-EX	Scenic I 1.9 dTi	F9Q 736	M889393	7.0	12.06	38.3	F-1	B
8083.101	IN-EX	Scenic I 2.0 16V	F4R 740	7700109151	5.5	11.07	40.6	A	B
8083.101	IN-EX	Scenic I 2.0 16V	F4R 741	7700109151	5.5	11.07	40.6	A	B
8083.101	IN-EX	Scenic I 2.0 16V	F4R 744	7700109151	5.5	11.07	40.6	A	B
8083.101	IN-EX	Scenic I 2.0 16V RX4	F4R 744	7700109151	5.5	11.07	40.6	A	B

(D1) Internal diameter, (D2) External diameter, (B) Shape, (C) Material

VALVE GUIDES

RENAULT

IVT Ref.	Type	Model	Engine	OEM Ref.	D1	D2	Length	B	C
8035.601	IN-EX	SCÉNIC II (JM0/1_), 1.5 dCi (JM0	K9K 729/K9K 728		6.0	11.07	40.5	F	B
8035.601	IN-EX	SCÉNIC II (JM0/1_), 1.5 dCi (JM0	K9K 722		6.0	11.07	40.5	F	B
8035.601	IN-EX	SCÉNIC II (JM0/1_), 1.5 dCi (JM1	K9K 732		6.0	11.07	40.5	F	B
8035.601	IN-EX	SCÉNIC II (JM0/1_), 1.5 dCi (JM1	K9K 724		6.0	11.07	40.5	F	B
8069.601	IN-EX	Scenic II 1.9 dCi	F9Q 804	7700859086	7.0	12.06	38.3	F-1	B
8069.601	IN-EX	Scenic II 1.9 dCi	F9Q 804	M889393	7.0	12.06	38.3	F-1	B
8069.601	IN-EX	Scenic II 1.9 dCi	F9Q 816	7700859086	7.0	12.06	38.3	F-1	B
8069.601	IN-EX	Scenic II 1.9 dCi	F9Q 816	M889393	7.0	12.06	38.3	F-1	B
8069.601	IN-EX	Scenic II 1.9 dCi	F9Q 818	7700859086	7.0	12.06	38.3	F-1	B
8069.601	IN-EX	Scenic II 1.9 dCi	F9Q 818	M889393	7.0	12.06	38.3	F-1	B
8069.601	IN-EX	Scenic II 1.9 dCi	F9Q J 803	7700859086	7.0	12.06	38.3	F-1	B
8069.601	IN-EX	Scenic II 1.9 dCi	F9Q J 803	M889393	7.0	12.06	38.3	F-1	B
8083.101	IN-EX	Scenic II 2.0	F4R 770	7700109151	5.5	11.07	40.6	A	B
8083.101	IN-EX	Scenic II 2.0	F4R 771	7700109151	5.5	11.07	40.6	A	B
8135.601	IN-EX	SUPER 5 (B/C40_), 1.6 D	F8M 730		8.0	13.1	39.0	F	B
8135.601	IN-EX	SUPER 5 (B/C40_), 1.6 D (B/C/40	F8M 730/F8M 720		8.0	13.1	39.0	F	B
8035.601	IN-EX	THALIA I (LB0/1/2_), 1.5 dCi	K9K 700		6.0	11.07	40.5	F	B
8035.601	IN-EX	THALIA I (LB0/1/2_), 1.5 dCi	K9K 702		6.0	11.07	40.5	F	B
8035.601	IN-EX	THALIA I (LB0/1/2_), 1.5 dCi	K9K 714/K9K 700		6.0	11.07	40.5	F	B
8095.600	IN-EX	Trafic 2.5 D	S8U 720	4749395	8.0	13.03	56.0	F	G1
8095.600	IN-EX	Trafic 2.5 D	S8U 722	4749395	8.0	13.03	56.0	F	G1
8095.600	IN-EX	Trafic 2.5 D 4x4	S8U 750	4749395	8.0	13.03	56.0	F	G1
8095.600	IN-EX	Trafic 2.5 D 4x4	S8U 758	4749395	8.0	13.03	56.0	F	G1
8095.600	IN-EX	Trafic Autobus 2.5 D	S8U 750	4749395	8.0	13.03	56.0	F	G1
8095.600	IN-EX	Trafic Autobus 2.5 D	S8U 752	4749395	8.0	13.03	56.0	F	G1
8095.600	IN-EX	Trafic Autobus 2.5 D	S8U 758	4749395	8.0	13.03	56.0	F	G1
8095.600	IN-EX	Trafic Autobus 2.5 D 4x4	S8U 750	4749395	8.0	13.03	56.0	F	G1
8095.600	IN-EX	Trafic Autobus 2.5 D 4x4	S8U 752	4749395	8.0	13.03	56.0	F	G1
8095.600	IN-EX	Trafic Autobus 2.5 D 4x4	S8U 758	4749395	8.0	13.03	56.0	F	G1
8141.100	IN-EX	TRAFIC Bus (TXW), 2.5 D	8140.67.2550/8140.67.2500/	4726483	8.0	13.03	60.0	A	G1
8141.100	IN-EX	TRAFIC Bus (TXW), 2.5 D 4x4	8140.67.2550/8140.67.2500/	4726483	8.0	13.03	60.0	A	G1
8095.600	IN-EX	Trafic Furgonato 2.5 D	S8U 750	4749395	8.0	13.03	56.0	F	G1
8095.600	IN-EX	Trafic Furgonato 2.5 D	S8U 752	4749395	8.0	13.03	56.0	F	G1
8095.600	IN-EX	Trafic Furgonato 2.5 D	S8U 758	4749395	8.0	13.03	56.0	F	G1
8095.600	IN-EX	Trafic Furgonato 2.5 D 4x4	S8U 750	4749395	8.0	13.03	56.0	F	G1
8095.600	IN-EX	Trafic Furgonato 2.5 D 4x4	S8U 752	4749395	8.0	13.03	56.0	F	G1
8095.600	IN-EX	Trafic Furgonato 2.5 D 4x4	S8U 758	4749395	8.0	13.03	56.0	F	G1
8069.601	IN-EX	Trafic II Autobus 1.9 dCi 100	F9Q 760	7700859086	7.0	12.06	38.3	F-1	B
8069.601	IN-EX	Trafic II Autobus 1.9 dCi 100	F9Q 760	M889393	7.0	12.06	38.3	F-1	B
8069.601	IN-EX	Trafic II Autobus 1.9 dCi 80	F9Q 762	7700859086	7.0	12.06	38.3	F-1	B
8069.601	IN-EX	Trafic II Autobus 1.9 dCi 80	F9Q 762	M889393	7.0	12.06	38.3	F-1	B
8157.601	IN-EX	TRAFIC II Bus (JL), 2.5 dCi 135 (J	G9U 730	8200562080	6.0	11.07	40.5	F	B
8157.601	IN-EX	TRAFIC II Bus (JL), 2.5 dCi 145 (J	G9U 630	8200562080	6.0	11.07	40.5	F	B
8069.601	IN-EX	Trafic II Furgonato 1.9 dCi 80	F9Q 760	7700859086	7.0	12.06	38.3	F-1	B
8069.601	IN-EX	Trafic II Furgonato 1.9 dCi 80	F9Q 760	M889393	7.0	12.06	38.3	F-1	B
8069.601	IN-EX	Trafic II Furgonato 1.9 dCi 80	F9Q 762	7700859086	7.0	12.06	38.3	F-1	B
8069.601	IN-EX	Trafic II Furgonato 1.9 dCi 80	F9Q 762	M889393	7.0	12.06	38.3	F-1	B
8157.601	IN-EX	TRAFIC II Kasten (FL), 2.5 dCi 13	G9U 730	8200562080	6.0	11.07	40.5	F	B
8157.601	IN-EX	TRAFIC II Kasten (FL), 2.5 dCi 14	G9U 630	8200562080	6.0	11.07	40.5	F	B
8083.101	IN-EX	Trafic II Pianale Piatto 2.0	F4R 720	7700109151	5.5	11.07	40.6	A	B
8157.601	IN-EX	TRAFIC II Pritsche/Fahrgestell (E	G9U 730	8200562080	6.0	11.07	40.5	F	B
8157.601	IN-EX	TRAFIC II Pritsche/Fahrgestell (E	G9U 630	8200562080	6.0	11.07	40.5	F	B
8141.100	IN-EX	TRAFIC Kasten (TXX), 2.5 D	8140.67.2550/8140.67.2500/	4726483	8.0	13.03	60.0	A	G1
8141.100	IN-EX	TRAFIC Kasten (TXX), 2.5 D 4x4	8140.67.2500/S8U 750/S8U	4726483	8.0	13.03	60.0	A	G1
8141.100	IN-EX	TRAFIC Pritsche/Fahrgestell (P6),	8140.61.240/S8U 722/S8U 7	4726483	8.0	13.03	60.0	A	G1
8141.100	IN-EX	TRAFIC Pritsche/Fahrgestell (PXX	8140.61.240/S8U 722/S8U 7	4726483	8.0	13.03	60.0	A	G1
8114.101	IN-EX	Twingo I 1.2	D7F 700		6.0	11.07	45.0	A	B
8114.101	IN-EX	Twingo I 1.2	D7F 701		6.0	11.07	45.0	A	B
8114.101	IN-EX	Twingo I 1.2	D7F 702		6.0	11.07	45.0	A	B
8114.101	IN-EX	Twingo I 1.2	D7F 703		6.0	11.07	45.0	A	B
8114.101	IN-EX	Twingo I 1.2	D7F 704		6.0	11.07	45.0	A	B
8114.101	IN-EX	Twingo I Furgonato 1.2	D7F 700		6.0	11.07	45.0	A	B

(D1) Internal diameter, (D2) External diameter, (B) Shape, (C) Material

VALVE GUIDES

IVT Ref.	Type	Model	Engine	OEM Ref.	D1	D2	Length	B	C
RENAULT									
8114.101	IN-EX	Twingo I Furgonato 1.2	D7F 701		6.0	11.07	45.0	A	B
8114.101	IN-EX	Twingo I Furgonato 1.2	D7F 702		6.0	11.07	45.0	A	B
8114.101	IN-EX	Twingo I Furgonato 1.2	D7F 703		6.0	11.07	45.0	A	B
8114.101	IN-EX	Twingo I Furgonato 1.2	D7F 704		6.0	11.07	45.0	A	B
8114.101	IN-EX	Twingo I Furgonato 1.2	D7F 706		6.0	11.07	45.0	A	B
8035.601	IN-EX	TWINGO II (CN0_), 1.5 dCi (CN0	K9K 740		6.0	11.07	40.5	F	B
8114.101	IN-EX	Twingo II 1.2	D7F 800		6.0	11.07	45.0	A	B
8157.601	IN-EX	VEL SATIS (BJ0_), 2.2 dCi	G9T 600	8200562080	6.0	11.07	40.5	F	B
8157.601	IN-EX	VEL SATIS (BJ0_), 2.2 dCi (BJ0E,	G9T 703/G9T 702	8200562080	6.0	11.07	40.5	F	B
8157.601	IN-EX	VEL SATIS (BJ0_), 2.2 dCi (BJ0E,	G9T 607/G9T 600/G9T 606/	8200562080	6.0	11.07	40.5	F	B
8157.601	IN-EX	VEL SATIS (BJ0_), 2.2 dCi (BJ0H	G9T 600	8200562080	6.0	11.07	40.5	F	B
8083.101	IN-EX	Vel Satis 2.0 Turbo 16V	F4R 762	7700109151	5.5	11.07	40.6	A	B
8083.101	IN-EX	Vel Satis 2.0 Turbo 16V	F4R 763	7700109151	5.5	11.07	40.6	A	B
8083.101	IN-EX	Vel Satis 2.0 Turbo 16V	F4R 766	7700109151	5.5	11.07	40.6	A	B
8083.101	IN-EX	Vel Satis 2.0 Turbo 16V	F4R 767	7700109151	5.5	11.07	40.6	A	B
8083.101	IN-EX	Vel Satis 2.0 Turbo 16V	F4R 867	7700109151	5.5	11.07	40.6	A	B
RILEY									
8124.100	IN-EX	ELF Mk.III, 1.0	-	12G1111	7.1	11.94	43.0	A-1	G
ROVER									
8155.600	IN	200 Coupe (XW), 216	D 16 A8	FDU1256	5.5	11.06	47.5	F	G1
8179.600	EX	200 Coupe (XW), 216	D 16 A8	FDU1260	5.5	11.06	54.0	F	G1
8155.600	IN	200 Hatchback (XW), 216 GSi	D 16 Z2	FDU1256	5.5	11.06	47.5	F	G1
8179.600	EX	200 Hatchback (XW), 216 GSi	D 16 Z2	FDU1260	5.5	11.06	54.0	F	G1
8155.600	IN	200 Hatchback (XW), 216 GTi	D 16 A8	FDU1256	5.5	11.06	47.5	F	G1
8179.600	EX	200 Hatchback (XW), 216 GTi	D 16 A8	FDU1260	5.5	11.06	54.0	F	G1
8155.600	IN	400 (XW), 416 GTI	D 16 A8	FDU1256	5.5	11.06	47.5	F	G1
8179.600	EX	400 (XW), 416 GTI	D 16 A8	FDU1260	5.5	11.06	54.0	F	G1
8178.601	IN-EX	400 (XW), 418 TD	XUD 7TE		8.0	14.05	48.0	F	B
8155.600	IN	400 Tourer (XW), 1.6 i	D 16 A8	FDU1256	5.5	11.06	47.5	F	G1
8179.600	EX	400 Tourer (XW), 1.6 i	D 16 A8	FDU1260	5.5	11.06	54.0	F	G1
8178.601	IN-EX	400 Tourer (XW), 1.8 TD	DHW (XUD9SD)		8.0	14.05	48.0	F	B
8155.600	IN	600 (RH), 618 i/Si	F 18 A3	FDU1256	5.5	11.06	47.5	F	G1
8179.600	EX	600 (RH), 618 i/Si	F 18 A3	FDU1260	5.5	11.06	54.0	F	G1
8155.600	IN	600 (RH), 620 i	F 20 Z2	FDU1256	5.5	11.06	47.5	F	G1
8179.600	EX	600 (RH), 620 i	F 20 Z2	FDU1260	5.5	11.06	54.0	F	G1
8155.600	IN	600 (RH), 620 Si	F 20 Z1	FDU1256	5.5	11.06	47.5	F	G1
8179.600	EX	600 (RH), 620 Si	F 20 Z1	FDU1260	5.5	11.06	54.0	F	G1
8162.101	IN-EX	75 (RJ), 2.0 CDT	M 47 R		6.0	11.54	39.0	A	B
8162.101	IN-EX	75 (RJ), 2.0 CDTi	204D2		6.0	11.54	39.0	A	B
8162.101	IN-EX	75 Tourer (RJ), 2.0 CDT	M 47 R		6.0	11.54	39.0	A	B
8162.101	IN-EX	75 Tourer (RJ), 2.0 CDTi	204D2		6.0	11.54	39.0	A	B
8155.600	IN	CABRIOLET (XW), 216 1.6i	D 16 A8	FDU1256	5.5	11.06	47.5	F	G1
8179.600	EX	CABRIOLET (XW), 216 1.6i	D 16 A8	FDU1260	5.5	11.06	54.0	F	G1
8124.100	IN-EX	MINI Cabriolet (XN), 1300	12 A2E	12G1111	7.1	11.94	43.0	A-1	G
8124.100	IN-EX	MINI, 1300	12 A2A	12G1111	7.1	11.94	43.0	A-1	G
8124.100	IN-EX	MINI, 1300	12 A2D	12G1111	7.1	11.94	43.0	A-1	G
8124.100	IN-EX	MINI, 1300	12 A2E/12 A2L	12G1111	7.1	11.94	43.0	A-1	G
SAAB									
8163.600	IN-EX	900 I (AC4, AM4), 2.0 S Turbo-16	B202S	7560154	7.0	12.04	49.2	F	G1
8163.600	IN-EX	900 I (AC4, AM4), 2.0 S Turbo-16	B202S	7560154	7.0	12.04	49.2	F	G1
8163.600	IN-EX	900 I (AC4, AM4), 2.0 Turbo-16	B202XL	7560154	7.0	12.04	49.2	F	G1
8163.600	IN-EX	900 I (AC4, AM4), 2.0 Turbo-16 S	B202XL	7560154	7.0	12.04	49.2	F	G1
8163.600	IN-EX	900 I (AC4, AM4), 2.0 Turbo-16 S	B202XL	7560154	7.0	12.04	49.2	F	G1
8163.600	IN-EX	900 I Cabriolet, 2.0 S Turbo-16	B202S	7560154	7.0	12.04	49.2	F	G1
8163.600	IN-EX	900 I Cabriolet, 2.0 Turbo-16	B202XL	7560154	7.0	12.04	49.2	F	G1
8163.600	IN-EX	900 I Cabriolet, 2.0 Turbo-16 S	B202XL	7560154	7.0	12.04	49.2	F	G1
8163.600	IN-EX	900 I Combi Coupe, 2.0 S Turbo-1	B202S	7560154	7.0	12.04	49.2	F	G1
8163.600	IN-EX	900 I Combi Coupe, 2.0 Turbo	B201XL	7560154	7.0	12.04	49.2	F	G1
8163.600	IN-EX	900 I Combi Coupe, 2.0 Turbo-16	B202L	7560154	7.0	12.04	49.2	F	G1

(D1) Internal diameter, (D2) External diameter, (B) Shape, (C) Material

VALVE GUIDES

IVT Ref.	Type	Model	Engine	OEM Ref.	D1	D2	Length	B	C
SAAB									
8163.600	IN-EX	900 I Combi Coupe, 2.0 Turbo-16	B202XL	7560154	7.0	12.04	49.2	F	G1
8163.600	IN-EX	900 I Combi Coupe, 2.0 Turbo-16	B202XL	7560154	7.0	12.04	49.2	F	G1
8163.600	IN-EX	900 I Combi Coupe, 2.0 Turbo-16	B202XL	7560154	7.0	12.04	49.2	F	G1
8027.600	IN-EX	900 II Cabriolet, 2.5 -24 V6	B258I		6.0	10.03	45.0	F	G1
8163.600	IN-EX	900 II Coupe, 2.0 i	B206I	7560154	7.0	12.04	49.2	F	G1
8027.600	IN-EX	900 II Coupe, 2.5 -24 V6	B258I		6.0	10.03	45.0	F	G1
8163.600	IN-EX	900 II, 2.0 i	B206I	7560154	7.0	12.04	49.2	F	G1
8027.600	IN-EX	900 II, 2.5 -24 V6	B258I		6.0	10.03	45.0	F	G1
8163.600	IN-EX	9000 Schrägheck, 2.0 -16	B202XI	7560154	7.0	12.04	49.2	F	G1
8163.600	IN-EX	9000 Schrägheck, 2.0 -16	B202XI	7560154	7.0	12.04	49.2	F	G1
8163.600	IN-EX	9000 Schrägheck, 2.0 -16 CS	B202I	7560154	7.0	12.04	49.2	F	G1
8163.600	IN-EX	9000 Schrägheck, 2.0 -16 Turbo	B202XL	7560154	7.0	12.04	49.2	F	G1
8163.600	IN-EX	9000 Schrägheck, 2.0 -16 Turbo	B202XL	7560154	7.0	12.04	49.2	F	G1
8163.600	IN-EX	9000 Schrägheck, 2.0 -16 Turbo	B202XL/B202L	7560154	7.0	12.04	49.2	F	G1
8163.600	IN-EX	9000 Schrägheck, 2.0 -16 Turbo C	B202L	7560154	7.0	12.04	49.2	F	G1
8163.600	IN-EX	9000 Schrägheck, 2.3 -16 CSE Ec	B234E	7560154	7.0	12.04	49.2	F	G1
8027.600	IN-EX	9000 Schrägheck, 3.0 -24 V6 CS/	B308I		6.0	10.03	45.0	F	G1
8163.600	IN-EX	9000, 2.0 -16	B202I	7560154	7.0	12.04	49.2	F	G1
8163.600	IN-EX	9000, 2.0 -16 Turbo	B202XL	7560154	7.0	12.04	49.2	F	G1
8163.600	IN-EX	9000, 2.0 -16 Turbo	B202XL	7560154	7.0	12.04	49.2	F	G1
8163.600	IN-EX	9000, 2.0 -16 Turbo CD	B202L	7560154	7.0	12.04	49.2	F	G1
8163.600	IN-EX	9000, 2.0 -16 Turbo CD	B202XL	7560154	7.0	12.04	49.2	F	G1
8163.600	IN-EX	9000, 2.0 -16 Turbo CD	B204E/B202S	7560154	7.0	12.04	49.2	F	G1
8163.600	IN-EX	9000, 2.3 -16 CDE Eco-Power	B234E	7560154	7.0	12.04	49.2	F	G1
8027.600	IN-EX	9000, 3.0 -24 V6 CD/CDE	B308I		6.0	10.03	45.0	F	G1
8137.605	IN-EX	9-3 (YS3D), 2.2 TiD	D223L	4500633	6.0	10.03	45.0	F	S06
8137.605	IN-EX	9-3 (YS3D), 2.2 TiD	D223L	4770269	6.0	10.03	45.0	F	S06
8137.605	IN-EX	9-3 (YS3D), 2.2 TiD	D223L	90502642	6.0	10.03	45.0	F	S06
8137.605	IN-EX	9-3 (YS3D), 2.2 TiD	X 22 DTH/D223L	4500633	6.0	10.03	45.0	F	S06
8137.605	IN-EX	9-3 (YS3D), 2.2 TiD	X 22 DTH/D223L	4770269	6.0	10.03	45.0	F	S06
8137.605	IN-EX	9-3 (YS3D), 2.2 TiD	X 22 DTH/D223L	90502642	6.0	10.03	45.0	F	S06
8130.104	IN-EX	9-3 (YS3F), 1,8t	B207E	9006082	6.0	10.03	36.0	A	S03
8130.104	IN-EX	9-3 (YS3F), 1,8t	B207E	90537248	6.0	10.03	36.0	A	S03
8130.104	IN-EX	9-3 (YS3F), 1,8t BioPower	B207E	9006082	6.0	10.03	36.0	A	S03
8130.104	IN-EX	9-3 (YS3F), 1,8t BioPower	B207E	90537248	6.0	10.03	36.0	A	S03
8130.104	IN-EX	9-3 (YS3F), 1,8t BioPower	B207L	9006082	6.0	10.03	36.0	A	S03
8130.104	IN-EX	9-3 (YS3F), 1,8t BioPower	B207L	90537248	6.0	10.03	36.0	A	S03
8040.605	IN-EX	9-3 (YS3F), 1.8 i	Z 18 XE	9158589	5.0	10.03	39.0	F	S06
8186.105	IN-EX	9-3 (YS3F), 1.9 TiD	Z 19 DTH	55210016	5.0	10.03	46.7	A	S06
8130.104	IN-EX	9-3 (YS3F), 2.0 t	B207L	9006082	6.0	10.03	36.0	A	S03
8130.104	IN-EX	9-3 (YS3F), 2.0 t	B207L	90537248	6.0	10.03	36.0	A	S03
8130.104	IN-EX	9-3 (YS3F), 2.0 t	B207R	9006082	6.0	10.03	36.0	A	S03
8130.104	IN-EX	9-3 (YS3F), 2.0 t	B207R	90537248	6.0	10.03	36.0	A	S03
8130.104	IN-EX	9-3 (YS3F), 2.0 t BioPower	B207L	9006082	6.0	10.03	36.0	A	S03
8130.104	IN-EX	9-3 (YS3F), 2.0 t BioPower	B207L	90537248	6.0	10.03	36.0	A	S03
8130.104	IN-EX	9-3 (YS3F), 2.0 t BioPower	B207R	9006082	6.0	10.03	36.0	A	S03
8130.104	IN-EX	9-3 (YS3F), 2.0 t BioPower	B207R	90537248	6.0	10.03	36.0	A	S03
8130.104	IN-EX	9-3 (YS3F), 2.0 Turbo XWD	B207R	9006082	6.0	10.03	36.0	A	S03
8130.104	IN-EX	9-3 (YS3F), 2.0 Turbo XWD	B207R	90537248	6.0	10.03	36.0	A	S03
8137.605	IN-EX	9-3 (YS3F), 2.2 TiD	D223L	4500633	6.0	10.03	45.0	F	S06
8137.605	IN-EX	9-3 (YS3F), 2.2 TiD	D223L	4770269	6.0	10.03	45.0	F	S06
8137.605	IN-EX	9-3 (YS3F), 2.2 TiD	D223L	90502642	6.0	10.03	45.0	F	S06
8130.104	IN-EX	9-3 Cabriolet (YS3F), 1,8t	B207E	9006082	6.0	10.03	36.0	A	S03
8130.104	IN-EX	9-3 Cabriolet (YS3F), 1,8t	B207E	90537248	6.0	10.03	36.0	A	S03
8130.104	IN-EX	9-3 Cabriolet (YS3F), 1,8t BioPow	B207E	9006082	6.0	10.03	36.0	A	S03
8130.104	IN-EX	9-3 Cabriolet (YS3F), 1,8t BioPow	B207E	90537248	6.0	10.03	36.0	A	S03
8130.104	IN-EX	9-3 Cabriolet (YS3F), 1,8t BioPow	B207L	9006082	6.0	10.03	36.0	A	S03
8130.104	IN-EX	9-3 Cabriolet (YS3F), 1,8t BioPow	B207L	90537248	6.0	10.03	36.0	A	S03
8186.105	IN-EX	9-3 Cabriolet (YS3F), 1.9 TiD	Z 19 DTH	55210016	5.0	10.03	46.7	A	S06
8130.104	IN-EX	9-3 Cabriolet (YS3F), 2.0 t	B207L	9006082	6.0	10.03	36.0	A	S03
8130.104	IN-EX	9-3 Cabriolet (YS3F), 2.0 t	B207L	90537248	6.0	10.03	36.0	A	S03
8130.104	IN-EX	9-3 Cabriolet (YS3F), 2.0 t	B207R	9006082	6.0	10.03	36.0	A	S03

(D1) Internal diameter, (D2) External diameter, (B) Shape, (C) Material

VALVE GUIDES

IVT Ref.	Type	Model	Engine	OEM Ref.	D1	D2	Length	B	C
SAAB									
8130.104	IN-EX	9-3 Cabriolet (YS3F), 2.0 t	B207R	90537248	6.0	10.03	36.0	A	S03
8130.104	IN-EX	9-3 Cabriolet (YS3F), 2.0 t BioPow	B207L	9006082	6.0	10.03	36.0	A	S03
8130.104	IN-EX	9-3 Cabriolet (YS3F), 2.0 t BioPow	B207L	90537248	6.0	10.03	36.0	A	S03
8040.605	IN-EX	9-3 Kombi (YS3F), 1.8 i	Z 18 XE	9158589	5.0	10.03	39.0	F	S06
8130.104	IN-EX	9-3 Kombi (YS3F), 1.8t 2.0	B207E	9006082	6.0	10.03	36.0	A	S03
8130.104	IN-EX	9-3 Kombi (YS3F), 1.8t 2.0	B207E	90537248	6.0	10.03	36.0	A	S03
8186.105	IN-EX	9-3 Kombi (YS3F), 1.9 TiD	Z 19 DTH	55210016	5.0	10.03	46.7	A	S06
8130.104	IN-EX	9-3 Kombi (YS3F), 2.0 t	B207E	9006082	6.0	10.03	36.0	A	S03
8130.104	IN-EX	9-3 Kombi (YS3F), 2.0 t	B207E	90537248	6.0	10.03	36.0	A	S03
8130.104	IN-EX	9-3 Kombi (YS3F), 2.0 t	B207L	9006082	6.0	10.03	36.0	A	S03
8130.104	IN-EX	9-3 Kombi (YS3F), 2.0 t	B207L	90537248	6.0	10.03	36.0	A	S03
8130.104	IN-EX	9-3 Kombi (YS3F), 2.0 t	B207R	9006082	6.0	10.03	36.0	A	S03
8130.104	IN-EX	9-3 Kombi (YS3F), 2.0 t	B207R	90537248	6.0	10.03	36.0	A	S03
8130.104	IN-EX	9-3 Kombi (YS3F), 2.0 t BioPower	B207E	9006082	6.0	10.03	36.0	A	S03
8130.104	IN-EX	9-3 Kombi (YS3F), 2.0 t BioPower	B207E	90537248	6.0	10.03	36.0	A	S03
8130.104	IN-EX	9-3 Kombi (YS3F), 2.0 t BioPower	B207L	9006082	6.0	10.03	36.0	A	S03
8130.104	IN-EX	9-3 Kombi (YS3F), 2.0 t BioPower	B207L	90537248	6.0	10.03	36.0	A	S03
8130.104	IN-EX	9-3 Kombi (YS3F), 2.0 t XWD	B207R	9006082	6.0	10.03	36.0	A	S03
8130.104	IN-EX	9-3 Kombi (YS3F), 2.0 t XWD	B207R	90537248	6.0	10.03	36.0	A	S03
8130.104	IN-EX	9-3X, 2.0 t BioPower XWD	B207R	9006082	6.0	10.03	36.0	A	S03
8130.104	IN-EX	9-3X, 2.0 t BioPower XWD	B207R	90537248	6.0	10.03	36.0	A	S03
8130.104	IN-EX	9-3X, 2.0 t XWD	B207R	9006082	6.0	10.03	36.0	A	S03
8130.104	IN-EX	9-3X, 2.0 t XWD	B207R	90537248	6.0	10.03	36.0	A	S03
8186.105	IN-EX	9-5 (YS3E), 1.9 TiD	Z 19 DTH	55210016	5.0	10.03	46.7	A	S06
8137.605	IN-EX	9-5 (YS3E), 2.2 TiD	D223L	4500633	6.0	10.03	45.0	F	S06
8137.605	IN-EX	9-5 (YS3E), 2.2 TiD	D223L	4770269	6.0	10.03	45.0	F	S06
8137.605	IN-EX	9-5 (YS3E), 2.2 TiD	D223L	90502642	6.0	10.03	45.0	F	S06
8186.105	IN-EX	9-5 Kombi (YS3E), 1.9 TiD	Z 19 DTH	55210016	5.0	10.03	46.7	A	S06
8137.605	IN-EX	9-5 Kombi (YS3E), 2.2 TiD	D223L	4500633	6.0	10.03	45.0	F	S06
8137.605	IN-EX	9-5 Kombi (YS3E), 2.2 TiD	D223L	4770269	6.0	10.03	45.0	F	S06
8137.605	IN-EX	9-5 Kombi (YS3E), 2.2 TiD	D223L	90502642	6.0	10.03	45.0	F	S06
SCANIA									
8190.100	EX	112 H/280, 2 - series - Cassone ri	-	1523410	11.0	18.01	73.0	A-8	G
8189.100	IN	112 H/280, 2 - series - Cassone ri	-	1523410	11.0	18.01	80.0	A-8	G
8189.100	IN	112 H/280, 2 - series - Cassone ri	-	1523410	11.0	18.01	80.0	A-8	G
8189.100	IN	112 H/280, 2 - series - Cassone ri	-	1523410	11.0	18.01	80.0	A-8	G
8190.100	EX	112 H/280, 2 - series - Cassone ri	-	1523410	11.0	18.01	73.0	A-8	G
8190.100	EX	112 H/280, 2 - series - Cassone ri	-	1523410	11.0	18.01	73.0	A-8	G
8189.100	IN	112 H/280, 2 - series - Cassone ri	-	300957	11.0	18.01	80.0	A-8	G
8190.100	EX	112 H/280, 2 - series - Cassone ri	-	300957	11.0	18.01	73.0	A-8	G
8190.100	EX	112 H/280, 2 - series - Cassone ri	-	300957	11.0	18.01	73.0	A-8	G
8190.100	EX	112 H/280, 2 - series - Cassone ri	-	300957	11.0	18.01	73.0	A-8	G
8189.100	IN	112 H/280, 2 - series - Cassone ri	-	300957	11.0	18.01	80.0	A-8	G
8189.100	IN	112 H/280, 2 - series - Cassone ri	-	300957	11.0	18.01	80.0	A-8	G
8190.100	EX	112 H/280, 2 - series - Pianale piat	-	1523410	11.0	18.01	73.0	A-8	G
8190.100	EX	112 H/280, 2 - series - Pianale piat	-	1523410	11.0	18.01	73.0	A-8	G
8190.100	EX	112 H/280, 2 - series - Pianale piat	-	1523410	11.0	18.01	73.0	A-8	G
8189.100	IN	112 H/280, 2 - series - Pianale piat	-	1523410	11.0	18.01	80.0	A-8	G
8189.100	IN	112 H/280, 2 - series - Pianale piat	-	1523410	11.0	18.01	80.0	A-8	G
8189.100	IN	112 H/280, 2 - series - Pianale piat	-	1523410	11.0	18.01	80.0	A-8	G
8190.100	EX	112 H/280, 2 - series - Pianale piat	-	300957	11.0	18.01	73.0	A-8	G
8190.100	EX	112 H/280, 2 - series - Pianale piat	-	300957	11.0	18.01	73.0	A-8	G
8190.100	EX	112 H/280, 2 - series - Pianale piat	-	300957	11.0	18.01	73.0	A-8	G
8189.100	IN	112 H/280, 2 - series - Pianale piat	-	300957	11.0	18.01	80.0	A-8	G
8189.100	IN	112 H/280, 2 - series - Pianale piat	-	300957	11.0	18.01	80.0	A-8	G
8189.100	IN	112 H/280, 2 - series - Pianale piat	-	300957	11.0	18.01	80.0	A-8	G
8190.100	EX	112 H/280, 2 - series - Trattore per	-	1523410	11.0	18.01	73.0	A-8	G
8190.100	EX	112 H/280, 2 - series - Trattore per	-	1523410	11.0	18.01	73.0	A-8	G
8189.100	IN	112 H/280, 2 - series - Trattore per	-	1523410	11.0	18.01	80.0	A-8	G
8190.100	EX	112 H/280, 2 - series - Trattore per	-	1523410	11.0	18.01	73.0	A-8	G
8189.100	IN	112 H/280, 2 - series - Trattore per	-	1523410	11.0	18.01	80.0	A-8	G

(D1) Internal diameter, (D2) External diameter, (B) Shape, (C) Material

VALVE GUIDES

IVT Ref.	Type	Model	Engine	OEM Ref.	D1	D2	Length	B	C
SCANIA									
8189.100	IN	112 H/280, 2 - series - Trattore per	-	1523410	11.0	18.01	80.0	A-8	G
8190.100	EX	112 H/280, 2 - series - Trattore per	-	300957	11.0	18.01	73.0	A-8	G
8190.100	EX	112 H/280, 2 - series - Trattore per	-	300957	11.0	18.01	73.0	A-8	G
8190.100	EX	112 H/280, 2 - series - Trattore per	-	300957	11.0	18.01	73.0	A-8	G
8189.100	IN	112 H/280, 2 - series - Trattore per	-	300957	11.0	18.01	80.0	A-8	G
8189.100	IN	112 H/280, 2 - series - Trattore per	-	300957	11.0	18.01	80.0	A-8	G
8189.100	IN	112 H/280, 2 - series - Trattore per	-	300957	11.0	18.01	80.0	A-8	G
8189.100	IN	112 H/305, 2 - series - Cassone ri	-	1523410	11.0	18.01	80.0	A-8	G
8190.100	EX	112 H/305, 2 - series - Cassone ri	-	1523410	11.0	18.01	73.0	A-8	G
8190.100	EX	112 H/305, 2 - series - Cassone ri	-	1523410	11.0	18.01	73.0	A-8	G
8190.100	EX	112 H/305, 2 - series - Cassone ri	-	1523410	11.0	18.01	73.0	A-8	G
8189.100	IN	112 H/305, 2 - series - Cassone ri	-	1523410	11.0	18.01	80.0	A-8	G
8189.100	IN	112 H/305, 2 - series - Cassone ri	-	1523410	11.0	18.01	80.0	A-8	G
8189.100	IN	112 H/305, 2 - series - Cassone ri	-	300957	11.0	18.01	80.0	A-8	G
8189.100	IN	112 H/305, 2 - series - Cassone ri	-	300957	11.0	18.01	80.0	A-8	G
8190.100	EX	112 H/305, 2 - series - Cassone ri	-	300957	11.0	18.01	73.0	A-8	G
8190.100	EX	112 H/305, 2 - series - Cassone ri	-	300957	11.0	18.01	73.0	A-8	G
8190.100	EX	112 H/305, 2 - series - Cassone ri	-	300957	11.0	18.01	73.0	A-8	G
8189.100	IN	112 H/305, 2 - series - Cassone ri	-	300957	11.0	18.01	80.0	A-8	G
8189.100	IN	112 H/305, 2 - series - Pianale piat	-	1523410	11.0	18.01	80.0	A-8	G
8190.100	EX	112 H/305, 2 - series - Pianale piat	-	1523410	11.0	18.01	73.0	A-8	G
8190.100	EX	112 H/305, 2 - series - Pianale piat	-	1523410	11.0	18.01	73.0	A-8	G
8190.100	EX	112 H/305, 2 - series - Pianale piat	-	1523410	11.0	18.01	73.0	A-8	G
8189.100	IN	112 H/305, 2 - series - Pianale piat	-	1523410	11.0	18.01	80.0	A-8	G
8189.100	IN	112 H/305, 2 - series - Pianale piat	-	1523410	11.0	18.01	80.0	A-8	G
8189.100	IN	112 H/305, 2 - series - Pianale piat	-	300957	11.0	18.01	80.0	A-8	G
8190.100	EX	112 H/305, 2 - series - Pianale piat	-	300957	11.0	18.01	73.0	A-8	G
8190.100	EX	112 H/305, 2 - series - Pianale piat	-	300957	11.0	18.01	73.0	A-8	G
8189.100	IN	112 H/305, 2 - series - Pianale piat	-	300957	11.0	18.01	80.0	A-8	G
8190.100	EX	112 H/305, 2 - series - Pianale piat	-	300957	11.0	18.01	73.0	A-8	G
8189.100	IN	112 H/305, 2 - series - Pianale piat	-	300957	11.0	18.01	80.0	A-8	G
8189.100	IN	112 H/305, 2 - series - Trattore per	-	1523410	11.0	18.01	80.0	A-8	G
8190.100	EX	112 H/305, 2 - series - Trattore per	-	1523410	11.0	18.01	73.0	A-8	G
8190.100	EX	112 H/305, 2 - series - Trattore per	-	1523410	11.0	18.01	73.0	A-8	G
8190.100	EX	112 H/305, 2 - series - Trattore per	-	1523410	11.0	18.01	73.0	A-8	G
8189.100	IN	112 H/305, 2 - series - Trattore per	-	1523410	11.0	18.01	80.0	A-8	G
8189.100	IN	112 H/305, 2 - series - Trattore per	-	1523410	11.0	18.01	80.0	A-8	G
8189.100	IN	112 H/305, 2 - series - Trattore per	-	300957	11.0	18.01	80.0	A-8	G
8190.100	EX	112 H/305, 2 - series - Trattore per	-	300957	11.0	18.01	73.0	A-8	G
8190.100	EX	112 H/305, 2 - series - Trattore per	-	300957	11.0	18.01	73.0	A-8	G
8189.100	IN	112 H/305, 2 - series - Trattore per	-	300957	11.0	18.01	80.0	A-8	G
8190.100	EX	112 H/305, 2 - series - Trattore per	-	300957	11.0	18.01	73.0	A-8	G
8189.100	IN	112 H/305, 2 - series - Trattore per	-	300957	11.0	18.01	80.0	A-8	G
8189.100	IN	112 M/305, 2 - series - Pianale pia	-	1523410	11.0	18.01	80.0	A-8	G
8190.100	EX	112 M/305, 2 - series - Pianale pia	-	1523410	11.0	18.01	73.0	A-8	G
8189.100	IN	112 M/305, 2 - series - Pianale pia	-	1523410	11.0	18.01	80.0	A-8	G
8190.100	EX	112 M/305, 2 - series - Pianale pia	-	1523410	11.0	18.01	73.0	A-8	G
8190.100	EX	112 M/305, 2 - series - Pianale pia	-	300957	11.0	18.01	73.0	A-8	G
8189.100	IN	112 M/305, 2 - series - Pianale pia	-	300957	11.0	18.01	80.0	A-8	G
8189.100	IN	112 M/305, 2 - series - Pianale pia	-	300957	11.0	18.01	80.0	A-8	G
8190.100	EX	112 M/305, 2 - series - Pianale pia	-	300957	11.0	18.01	73.0	A-8	G
8190.100	EX	112 M/305, 2 - series - Trattore pe	-	1523410	11.0	18.01	73.0	A-8	G
8190.100	EX	112 M/305, 2 - series - Trattore pe	-	1523410	11.0	18.01	73.0	A-8	G
8189.100	IN	112 M/305, 2 - series - Trattore pe	-	1523410	11.0	18.01	80.0	A-8	G
8189.100	IN	112 M/305, 2 - series - Trattore pe	-	1523410	11.0	18.01	80.0	A-8	G
8189.100	IN	112 M/305, 2 - series - Trattore pe	-	300957	11.0	18.01	80.0	A-8	G
8190.100	EX	112 M/305, 2 - series - Trattore pe	-	300957	11.0	18.01	73.0	A-8	G
8190.100	EX	112 M/305, 2 - series - Trattore pe	-	300957	11.0	18.01	73.0	A-8	G
8189.100	IN	112 M/305, 2 - series - Trattore pe	-	300957	11.0	18.01	80.0	A-8	G
8191.600	IN-EX	113 E/320, 3 - series - Cassone ri	-	1403823	10.0	16.01	73.0	F-8	G
8191.600	IN-EX	113 E/320, 3 - series - Cassone ri	-	1403823	10.0	16.01	73.0	F-8	G
8190.100	EX	113 E/320, 3 - series - Cassone ri	-	1523410	11.0	18.01	73.0	A-8	G

(D1) Internal diameter, (D2) External diameter, (B) Shape, (C) Material

VALVE GUIDES

IVT Ref.	Type	Model	Engine	OEM Ref.	D1	D2	Length	B	C
SCANIA									
8189.100	IN	113 E/320, 3 - series - Cassone ri	-	1523410	11.0	18.01	80.0	A-8	G
8189.100	IN	113 E/320, 3 - series - Cassone ri	-	1523410	11.0	18.01	80.0	A-8	G
8190.100	EX	113 E/320, 3 - series - Cassone ri	-	1523410	11.0	18.01	73.0	A-8	G
8191.600	IN-EX	113 E/320, 3 - series - Cassone ri	-	1940008	10.0	16.01	73.0	F-8	G
8191.600	IN-EX	113 E/320, 3 - series - Cassone ri	-	1940008	10.0	16.01	73.0	F-8	G
8190.100	EX	113 E/320, 3 - series - Cassone ri	-	300957	11.0	18.01	73.0	A-8	G
8189.100	IN	113 E/320, 3 - series - Cassone ri	-	300957	11.0	18.01	80.0	A-8	G
8189.100	IN	113 E/320, 3 - series - Cassone ri	-	300957	11.0	18.01	80.0	A-8	G
8190.100	EX	113 E/320, 3 - series - Cassone ri	-	300957	11.0	18.01	73.0	A-8	G
8191.600	IN-EX	113 E/320, 3 - series - Pianale piat	-	1403823	10.0	16.01	73.0	F-8	G
8191.600	IN-EX	113 E/320, 3 - series - Pianale piat	-	1403823	10.0	16.01	73.0	F-8	G
8190.100	EX	113 E/320, 3 - series - Pianale piat	-	1523410	11.0	18.01	73.0	A-8	G
8189.100	IN	113 E/320, 3 - series - Pianale piat	-	1523410	11.0	18.01	80.0	A-8	G
8190.100	EX	113 E/320, 3 - series - Pianale piat	-	1523410	11.0	18.01	73.0	A-8	G
8189.100	IN	113 E/320, 3 - series - Pianale piat	-	1523410	11.0	18.01	80.0	A-8	G
8191.600	IN-EX	113 E/320, 3 - series - Pianale piat	-	1940008	10.0	16.01	73.0	F-8	G
8191.600	IN-EX	113 E/320, 3 - series - Pianale piat	-	1940008	10.0	16.01	73.0	F-8	G
8190.100	EX	113 E/320, 3 - series - Pianale piat	-	300957	11.0	18.01	73.0	A-8	G
8190.100	EX	113 E/320, 3 - series - Pianale piat	-	300957	11.0	18.01	73.0	A-8	G
8189.100	IN	113 E/320, 3 - series - Pianale piat	-	300957	11.0	18.01	80.0	A-8	G
8189.100	IN	113 E/320, 3 - series - Pianale piat	-	300957	11.0	18.01	80.0	A-8	G
8191.600	IN-EX	113 E/360, 3 - series - Cassone ri	-	1403823	10.0	16.01	73.0	F-8	G
8191.600	IN-EX	113 E/360, 3 - series - Cassone ri	-	1403823	10.0	16.01	73.0	F-8	G
8189.100	IN	113 E/360, 3 - series - Cassone ri	-	1523410	11.0	18.01	80.0	A-8	G
8190.100	EX	113 E/360, 3 - series - Cassone ri	-	1523410	11.0	18.01	73.0	A-8	G
8190.100	EX	113 E/360, 3 - series - Cassone ri	-	1523410	11.0	18.01	73.0	A-8	G
8189.100	IN	113 E/360, 3 - series - Cassone ri	-	1523410	11.0	18.01	80.0	A-8	G
8191.600	IN-EX	113 E/360, 3 - series - Cassone ri	-	1940008	10.0	16.01	73.0	F-8	G
8191.600	IN-EX	113 E/360, 3 - series - Cassone ri	-	1940008	10.0	16.01	73.0	F-8	G
8190.100	EX	113 E/360, 3 - series - Cassone ri	-	300957	11.0	18.01	73.0	A-8	G
8190.100	EX	113 E/360, 3 - series - Cassone ri	-	300957	11.0	18.01	73.0	A-8	G
8189.100	IN	113 E/360, 3 - series - Cassone ri	-	300957	11.0	18.01	80.0	A-8	G
8189.100	IN	113 E/360, 3 - series - Cassone ri	-	300957	11.0	18.01	80.0	A-8	G
8191.600	IN-EX	113 E/360, 3 - series - Trattore per	-	1403823	10.0	16.01	73.0	F-8	G
8190.100	EX	113 E/360, 3 - series - Trattore per	-	1523410	11.0	18.01	73.0	A-8	G
8189.100	IN	113 E/360, 3 - series - Trattore per	-	1523410	11.0	18.01	80.0	A-8	G
8191.600	IN-EX	113 E/360, 3 - series - Trattore per	-	1940008	10.0	16.01	73.0	F-8	G
8190.100	EX	113 E/360, 3 - series - Trattore per	-	300957	11.0	18.01	73.0	A-8	G
8189.100	IN	113 E/360, 3 - series - Trattore per	-	300957	11.0	18.01	80.0	A-8	G
8191.600	IN-EX	113 E/380, 3 - series - Cassone ri	-	1403823	10.0	16.01	73.0	F-8	G
8191.600	IN-EX	113 E/380, 3 - series - Cassone ri	-	1403823	10.0	16.01	73.0	F-8	G
8190.100	EX	113 E/380, 3 - series - Cassone ri	-	1523410	11.0	18.01	73.0	A-8	G
8189.100	IN	113 E/380, 3 - series - Cassone ri	-	1523410	11.0	18.01	80.0	A-8	G
8189.100	IN	113 E/380, 3 - series - Cassone ri	-	1523410	11.0	18.01	80.0	A-8	G
8190.100	EX	113 E/380, 3 - series - Cassone ri	-	1523410	11.0	18.01	73.0	A-8	G
8191.600	IN-EX	113 E/380, 3 - series - Cassone ri	-	1940008	10.0	16.01	73.0	F-8	G
8191.600	IN-EX	113 E/380, 3 - series - Cassone ri	-	1940008	10.0	16.01	73.0	F-8	G
8190.100	EX	113 E/380, 3 - series - Cassone ri	-	300957	11.0	18.01	73.0	A-8	G
8190.100	EX	113 E/380, 3 - series - Cassone ri	-	300957	11.0	18.01	73.0	A-8	G
8189.100	IN	113 E/380, 3 - series - Cassone ri	-	300957	11.0	18.01	80.0	A-8	G
8189.100	IN	113 E/380, 3 - series - Cassone ri	-	300957	11.0	18.01	80.0	A-8	G
8191.600	IN-EX	113 E/380, 3 - series - Trattore per	-	1403823	10.0	16.01	73.0	F-8	G
8189.100	IN	113 E/380, 3 - series - Trattore per	-	1523410	11.0	18.01	80.0	A-8	G
8190.100	EX	113 E/380, 3 - series - Trattore per	-	1523410	11.0	18.01	73.0	A-8	G
8191.600	IN-EX	113 E/380, 3 - series - Trattore per	-	1940008	10.0	16.01	73.0	F-8	G
8189.100	IN	113 E/380, 3 - series - Trattore per	-	300957	11.0	18.01	80.0	A-8	G
8190.100	EX	113 E/380, 3 - series - Trattore per	-	300957	11.0	18.01	73.0	A-8	G
8191.600	IN-EX	113 H/310, 3 - series - Cassone ri	-	1403823	10.0	16.01	73.0	F-8	G
8191.600	IN-EX	113 H/310, 3 - series - Cassone ri	-	1403823	10.0	16.01	73.0	F-8	G
8191.600	IN-EX	113 H/310, 3 - series - Cassone ri	-	1403823	10.0	16.01	73.0	F-8	G
8191.600	IN-EX	113 H/310, 3 - series - Cassone ri	-	1403823	10.0	16.01	73.0	F-8	G
8191.600	IN-EX	113 H/310, 3 - series - Cassone ri	-	1403823	10.0	16.01	73.0	F-8	G

(D1) Internal diameter, (D2) External diameter, (B) Shape, (C) Material

VALVE GUIDES

IVT Ref.	Type	Model	Engine	OEM Ref.	D1	D2	Length	B	C
SCANIA									
8191.600	IN-EX	113 H/310, 3 - series - Cassone ri	-	1403823	10.0	16.01	73.0	F-8	G
8189.100	IN	113 H/310, 3 - series - Cassone ri	-	1523410	11.0	18.01	80.0	A-8	G
8189.100	IN	113 H/310, 3 - series - Cassone ri	-	1523410	11.0	18.01	80.0	A-8	G
8189.100	IN	113 H/310, 3 - series - Cassone ri	-	1523410	11.0	18.01	80.0	A-8	G
8189.100	IN	113 H/310, 3 - series - Cassone ri	-	1523410	11.0	18.01	80.0	A-8	G
8189.100	IN	113 H/310, 3 - series - Cassone ri	-	1523410	11.0	18.01	80.0	A-8	G
8190.100	EX	113 H/310, 3 - series - Cassone ri	-	1523410	11.0	18.01	73.0	A-8	G
8189.100	IN	113 H/310, 3 - series - Cassone ri	-	1523410	11.0	18.01	80.0	A-8	G
8190.100	EX	113 H/310, 3 - series - Cassone ri	-	1523410	11.0	18.01	73.0	A-8	G
8190.100	EX	113 H/310, 3 - series - Cassone ri	-	1523410	11.0	18.01	73.0	A-8	G
8190.100	EX	113 H/310, 3 - series - Cassone ri	-	1523410	11.0	18.01	73.0	A-8	G
8190.100	EX	113 H/310, 3 - series - Cassone ri	-	1523410	11.0	18.01	73.0	A-8	G
8190.100	EX	113 H/310, 3 - series - Cassone ri	-	1523410	11.0	18.01	73.0	A-8	G
8191.600	IN-EX	113 H/310, 3 - series - Cassone ri	-	1940008	10.0	16.01	73.0	F-8	G
8191.600	IN-EX	113 H/310, 3 - series - Cassone ri	-	1940008	10.0	16.01	73.0	F-8	G
8191.600	IN-EX	113 H/310, 3 - series - Cassone ri	-	1940008	10.0	16.01	73.0	F-8	G
8191.600	IN-EX	113 H/310, 3 - series - Cassone ri	-	1940008	10.0	16.01	73.0	F-8	G
8191.600	IN-EX	113 H/310, 3 - series - Cassone ri	-	1940008	10.0	16.01	73.0	F-8	G
8191.600	IN-EX	113 H/310, 3 - series - Cassone ri	-	1940008	10.0	16.01	73.0	F-8	G
8189.100	IN	113 H/310, 3 - series - Cassone ri	-	300957	11.0	18.01	80.0	A-8	G
8189.100	IN	113 H/310, 3 - series - Cassone ri	-	300957	11.0	18.01	80.0	A-8	G
8189.100	IN	113 H/310, 3 - series - Cassone ri	-	300957	11.0	18.01	80.0	A-8	G
8189.100	IN	113 H/310, 3 - series - Cassone ri	-	300957	11.0	18.01	80.0	A-8	G
8189.100	IN	113 H/310, 3 - series - Cassone ri	-	300957	11.0	18.01	80.0	A-8	G
8189.100	IN	113 H/310, 3 - series - Cassone ri	-	300957	11.0	18.01	80.0	A-8	G
8190.100	EX	113 H/310, 3 - series - Cassone ri	-	300957	11.0	18.01	73.0	A-8	G
8190.100	EX	113 H/310, 3 - series - Cassone ri	-	300957	11.0	18.01	73.0	A-8	G
8190.100	EX	113 H/310, 3 - series - Cassone ri	-	300957	11.0	18.01	73.0	A-8	G
8190.100	EX	113 H/310, 3 - series - Cassone ri	-	300957	11.0	18.01	73.0	A-8	G
8190.100	EX	113 H/310, 3 - series - Cassone ri	-	300957	11.0	18.01	73.0	A-8	G
8190.100	EX	113 H/310, 3 - series - Cassone ri	-	300957	11.0	18.01	73.0	A-8	G
8191.600	IN-EX	113 H/320, 3 - series - Betoniera	-	1403823	10.0	16.01	73.0	F-8	G
8191.600	IN-EX	113 H/320, 3 - series - Betoniera	-	1403823	10.0	16.01	73.0	F-8	G
8190.100	EX	113 H/320, 3 - series - Betoniera	-	1523410	11.0	18.01	73.0	A-8	G
8189.100	IN	113 H/320, 3 - series - Betoniera	-	1523410	11.0	18.01	80.0	A-8	G
8190.100	EX	113 H/320, 3 - series - Betoniera	-	1523410	11.0	18.01	73.0	A-8	G
8189.100	IN	113 H/320, 3 - series - Betoniera	-	1523410	11.0	18.01	80.0	A-8	G
8191.600	IN-EX	113 H/320, 3 - series - Betoniera	-	1940008	10.0	16.01	73.0	F-8	G
8191.600	IN-EX	113 H/320, 3 - series - Betoniera	-	1940008	10.0	16.01	73.0	F-8	G
8189.100	IN	113 H/320, 3 - series - Betoniera	-	300957	11.0	18.01	80.0	A-8	G
8189.100	IN	113 H/320, 3 - series - Betoniera	-	300957	11.0	18.01	80.0	A-8	G
8190.100	EX	113 H/320, 3 - series - Betoniera	-	300957	11.0	18.01	73.0	A-8	G
8190.100	EX	113 H/320, 3 - series - Betoniera	-	300957	11.0	18.01	73.0	A-8	G
8191.600	IN-EX	113 H/320, 3 - series - Cassone ri	-	1403823	10.0	16.01	73.0	F-8	G
8191.600	IN-EX	113 H/320, 3 - series - Cassone ri	-	1403823	10.0	16.01	73.0	F-8	G
8191.600	IN-EX	113 H/320, 3 - series - Cassone ri	-	1403823	10.0	16.01	73.0	F-8	G
8191.600	IN-EX	113 H/320, 3 - series - Cassone ri	-	1403823	10.0	16.01	73.0	F-8	G
8191.600	IN-EX	113 H/320, 3 - series - Cassone ri	-	1403823	10.0	16.01	73.0	F-8	G
8189.100	IN	113 H/320, 3 - series - Cassone ri	-	1523410	11.0	18.01	80.0	A-8	G
8189.100	IN	113 H/320, 3 - series - Cassone ri	-	1523410	11.0	18.01	80.0	A-8	G
8189.100	IN	113 H/320, 3 - series - Cassone ri	-	1523410	11.0	18.01	80.0	A-8	G
8189.100	IN	113 H/320, 3 - series - Cassone ri	-	1523410	11.0	18.01	80.0	A-8	G
8189.100	IN	113 H/320, 3 - series - Cassone ri	-	1523410	11.0	18.01	80.0	A-8	G
8190.100	EX	113 H/320, 3 - series - Cassone ri	-	1523410	11.0	18.01	73.0	A-8	G
8190.100	EX	113 H/320, 3 - series - Cassone ri	-	1523410	11.0	18.01	73.0	A-8	G
8190.100	EX	113 H/320, 3 - series - Cassone ri	-	1523410	11.0	18.01	73.0	A-8	G
8190.100	EX	113 H/320, 3 - series - Cassone ri	-	1523410	11.0	18.01	73.0	A-8	G
8190.100	EX	113 H/320, 3 - series - Cassone ri	-	1523410	11.0	18.01	73.0	A-8	G
8191.600	IN-EX	113 H/320, 3 - series - Cassone ri	-	1940008	10.0	16.01	73.0	F-8	G
8191.600	IN-EX	113 H/320, 3 - series - Cassone ri	-	1940008	10.0	16.01	73.0	F-8	G
8191.600	IN-EX	113 H/320, 3 - series - Cassone ri	-	1940008	10.0	16.01	73.0	F-8	G
8191.600	IN-EX	113 H/320, 3 - series - Cassone ri	-	1940008	10.0	16.01	73.0	F-8	G

(D1) Internal diameter, (D2) External diameter, (B) Shape, (C) Material

VALVE GUIDES

IVT Ref.	Type	Model	Engine	OEM Ref.	D1	D2	Length	B	C
SCANIA									
8191.600	IN-EX	113 H/320, 3 - series - Cassone ri	-	1940008	10.0	16.01	73.0	F-8	G
8189.100	IN	113 H/320, 3 - series - Cassone ri	-	300957	11.0	18.01	80.0	A-8	G
8189.100	IN	113 H/320, 3 - series - Cassone ri	-	300957	11.0	18.01	80.0	A-8	G
8189.100	IN	113 H/320, 3 - series - Cassone ri	-	300957	11.0	18.01	80.0	A-8	G
8189.100	IN	113 H/320, 3 - series - Cassone ri	-	300957	11.0	18.01	80.0	A-8	G
8189.100	IN	113 H/320, 3 - series - Cassone ri	-	300957	11.0	18.01	80.0	A-8	G
8190.100	EX	113 H/320, 3 - series - Cassone ri	-	300957	11.0	18.01	73.0	A-8	G
8190.100	EX	113 H/320, 3 - series - Cassone ri	-	300957	11.0	18.01	73.0	A-8	G
8190.100	EX	113 H/320, 3 - series - Cassone ri	-	300957	11.0	18.01	73.0	A-8	G
8190.100	EX	113 H/320, 3 - series - Cassone ri	-	300957	11.0	18.01	73.0	A-8	G
8190.100	EX	113 H/320, 3 - series - Cassone ri	-	300957	11.0	18.01	73.0	A-8	G
8191.600	IN-EX	113 H/320, 3 - series - Pianale piat	-	1403823	10.0	16.01	73.0	F-8	G
8191.600	IN-EX	113 H/320, 3 - series - Pianale piat	-	1403823	10.0	16.01	73.0	F-8	G
8191.600	IN-EX	113 H/320, 3 - series - Pianale piat	-	1403823	10.0	16.01	73.0	F-8	G
8191.600	IN-EX	113 H/320, 3 - series - Pianale piat	-	1403823	10.0	16.01	73.0	F-8	G
8191.600	IN-EX	113 H/320, 3 - series - Pianale piat	-	1403823	10.0	16.01	73.0	F-8	G
8191.600	IN-EX	113 H/320, 3 - series - Pianale piat	-	1403823	10.0	16.01	73.0	F-8	G
8191.600	IN-EX	113 H/320, 3 - series - Pianale piat	-	1403823	10.0	16.01	73.0	F-8	G
8191.600	IN-EX	113 H/320, 3 - series - Pianale piat	-	1403823	10.0	16.01	73.0	F-8	G
8190.100	EX	113 H/320, 3 - series - Pianale piat	-	1523410	11.0	18.01	73.0	A-8	G
8190.100	EX	113 H/320, 3 - series - Pianale piat	-	1523410	11.0	18.01	73.0	A-8	G
8190.100	EX	113 H/320, 3 - series - Pianale piat	-	1523410	11.0	18.01	73.0	A-8	G
8190.100	EX	113 H/320, 3 - series - Pianale piat	-	1523410	11.0	18.01	73.0	A-8	G
8190.100	EX	113 H/320, 3 - series - Pianale piat	-	1523410	11.0	18.01	73.0	A-8	G
8190.100	EX	113 H/320, 3 - series - Pianale piat	-	1523410	11.0	18.01	73.0	A-8	G
8190.100	EX	113 H/320, 3 - series - Pianale piat	-	1523410	11.0	18.01	73.0	A-8	G
8189.100	IN	113 H/320, 3 - series - Pianale piat	-	1523410	11.0	18.01	80.0	A-8	G
8189.100	IN	113 H/320, 3 - series - Pianale piat	-	1523410	11.0	18.01	80.0	A-8	G
8189.100	IN	113 H/320, 3 - series - Pianale piat	-	1523410	11.0	18.01	80.0	A-8	G
8189.100	IN	113 H/320, 3 - series - Pianale piat	-	1523410	11.0	18.01	80.0	A-8	G
8189.100	IN	113 H/320, 3 - series - Pianale piat	-	1523410	11.0	18.01	80.0	A-8	G
8189.100	IN	113 H/320, 3 - series - Pianale piat	-	1523410	11.0	18.01	80.0	A-8	G
8189.100	IN	113 H/320, 3 - series - Pianale piat	-	1523410	11.0	18.01	80.0	A-8	G
8189.100	IN	113 H/320, 3 - series - Pianale piat	-	1523410	11.0	18.01	80.0	A-8	G
8190.100	EX	113 H/320, 3 - series - Pianale piat	-	1523410	11.0	18.01	73.0	A-8	G
8191.600	IN-EX	113 H/320, 3 - series - Pianale piat	-	1940008	10.0	16.01	73.0	F-8	G
8191.600	IN-EX	113 H/320, 3 - series - Pianale piat	-	1940008	10.0	16.01	73.0	F-8	G
8191.600	IN-EX	113 H/320, 3 - series - Pianale piat	-	1940008	10.0	16.01	73.0	F-8	G
8191.600	IN-EX	113 H/320, 3 - series - Pianale piat	-	1940008	10.0	16.01	73.0	F-8	G
8191.600	IN-EX	113 H/320, 3 - series - Pianale piat	-	1940008	10.0	16.01	73.0	F-8	G
8191.600	IN-EX	113 H/320, 3 - series - Pianale piat	-	1940008	10.0	16.01	73.0	F-8	G
8191.600	IN-EX	113 H/320, 3 - series - Pianale piat	-	1940008	10.0	16.01	73.0	F-8	G
8191.600	IN-EX	113 H/320, 3 - series - Pianale piat	-	1940008	10.0	16.01	73.0	F-8	G
8189.100	IN	113 H/320, 3 - series - Pianale piat	-	300957	11.0	18.01	80.0	A-8	G
8190.100	EX	113 H/320, 3 - series - Pianale piat	-	300957	11.0	18.01	73.0	A-8	G
8190.100	EX	113 H/320, 3 - series - Pianale piat	-	300957	11.0	18.01	73.0	A-8	G
8190.100	EX	113 H/320, 3 - series - Pianale piat	-	300957	11.0	18.01	73.0	A-8	G
8190.100	EX	113 H/320, 3 - series - Pianale piat	-	300957	11.0	18.01	73.0	A-8	G
8190.100	EX	113 H/320, 3 - series - Pianale piat	-	300957	11.0	18.01	73.0	A-8	G
8190.100	EX	113 H/320, 3 - series - Pianale piat	-	300957	11.0	18.01	73.0	A-8	G
8190.100	EX	113 H/320, 3 - series - Pianale piat	-	300957	11.0	18.01	73.0	A-8	G
8189.100	IN	113 H/320, 3 - series - Pianale piat	-	300957	11.0	18.01	80.0	A-8	G
8189.100	IN	113 H/320, 3 - series - Pianale piat	-	300957	11.0	18.01	80.0	A-8	G
8189.100	IN	113 H/320, 3 - series - Pianale piat	-	300957	11.0	18.01	80.0	A-8	G
8189.100	IN	113 H/320, 3 - series - Pianale piat	-	300957	11.0	18.01	80.0	A-8	G
8189.100	IN	113 H/320, 3 - series - Pianale piat	-	300957	11.0	18.01	80.0	A-8	G
8189.100	IN	113 H/320, 3 - series - Pianale piat	-	300957	11.0	18.01	80.0	A-8	G
8189.100	IN	113 H/320, 3 - series - Pianale piat	-	300957	11.0	18.01	80.0	A-8	G
8190.100	EX	113 H/320, 3 - series - Pianale piat	-	300957	11.0	18.01	73.0	A-8	G
8191.600	IN-EX	113 H/320, 3 - series - Trattore per	-	1403823	10.0	16.01	73.0	F-8	G
8191.600	IN-EX	113 H/320, 3 - series - Trattore per	-	1403823	10.0	16.01	73.0	F-8	G
8191.600	IN-EX	113 H/320, 3 - series - Trattore per	-	1403823	10.0	16.01	73.0	F-8	G

(D1) Internal diameter, (D2) External diameter, (B) Shape, (C) Material

VALVE GUIDES

IVT Ref.	Type	Model	Engine	OEM Ref.	D1	D2	Length	B	C
SCANIA									
8191.600	IN-EX	113 H/320, 3 - series - Trattore per	-	1403823	10.0	16.01	73.0	F-8	G
8191.600	IN-EX	113 H/320, 3 - series - Trattore per	-	1403823	10.0	16.01	73.0	F-8	G
8191.600	IN-EX	113 H/320, 3 - series - Trattore per	-	1403823	10.0	16.01	73.0	F-8	G
8189.100	IN	113 H/320, 3 - series - Trattore per	-	1523410	11.0	18.01	80.0	A-8	G
8189.100	IN	113 H/320, 3 - series - Trattore per	-	1523410	11.0	18.01	80.0	A-8	G
8189.100	IN	113 H/320, 3 - series - Trattore per	-	1523410	11.0	18.01	80.0	A-8	G
8189.100	IN	113 H/320, 3 - series - Trattore per	-	1523410	11.0	18.01	80.0	A-8	G
8189.100	IN	113 H/320, 3 - series - Trattore per	-	1523410	11.0	18.01	80.0	A-8	G
8189.100	IN	113 H/320, 3 - series - Trattore per	-	1523410	11.0	18.01	80.0	A-8	G
8190.100	EX	113 H/320, 3 - series - Trattore per	-	1523410	11.0	18.01	73.0	A-8	G
8190.100	EX	113 H/320, 3 - series - Trattore per	-	1523410	11.0	18.01	73.0	A-8	G
8190.100	EX	113 H/320, 3 - series - Trattore per	-	1523410	11.0	18.01	73.0	A-8	G
8190.100	EX	113 H/320, 3 - series - Trattore per	-	1523410	11.0	18.01	73.0	A-8	G
8190.100	EX	113 H/320, 3 - series - Trattore per	-	1523410	11.0	18.01	73.0	A-8	G
8190.100	EX	113 H/320, 3 - series - Trattore per	-	1523410	11.0	18.01	73.0	A-8	G
8191.600	IN-EX	113 H/320, 3 - series - Trattore per	-	1940008	10.0	16.01	73.0	F-8	G
8191.600	IN-EX	113 H/320, 3 - series - Trattore per	-	1940008	10.0	16.01	73.0	F-8	G
8191.600	IN-EX	113 H/320, 3 - series - Trattore per	-	1940008	10.0	16.01	73.0	F-8	G
8191.600	IN-EX	113 H/320, 3 - series - Trattore per	-	1940008	10.0	16.01	73.0	F-8	G
8191.600	IN-EX	113 H/320, 3 - series - Trattore per	-	1940008	10.0	16.01	73.0	F-8	G
8191.600	IN-EX	113 H/320, 3 - series - Trattore per	-	1940008	10.0	16.01	73.0	F-8	G
8189.100	IN	113 H/320, 3 - series - Trattore per	-	300957	11.0	18.01	80.0	A-8	G
8189.100	IN	113 H/320, 3 - series - Trattore per	-	300957	11.0	18.01	80.0	A-8	G
8189.100	IN	113 H/320, 3 - series - Trattore per	-	300957	11.0	18.01	80.0	A-8	G
8189.100	IN	113 H/320, 3 - series - Trattore per	-	300957	11.0	18.01	80.0	A-8	G
8189.100	IN	113 H/320, 3 - series - Trattore per	-	300957	11.0	18.01	80.0	A-8	G
8189.100	IN	113 H/320, 3 - series - Trattore per	-	300957	11.0	18.01	80.0	A-8	G
8190.100	EX	113 H/320, 3 - series - Trattore per	-	300957	11.0	18.01	73.0	A-8	G
8190.100	EX	113 H/320, 3 - series - Trattore per	-	300957	11.0	18.01	73.0	A-8	G
8190.100	EX	113 H/320, 3 - series - Trattore per	-	300957	11.0	18.01	73.0	A-8	G
8190.100	EX	113 H/320, 3 - series - Trattore per	-	300957	11.0	18.01	73.0	A-8	G
8190.100	EX	113 H/320, 3 - series - Trattore per	-	300957	11.0	18.01	73.0	A-8	G
8190.100	EX	113 H/320, 3 - series - Trattore per	-	300957	11.0	18.01	73.0	A-8	G
8191.600	IN-EX	113 H/360, 3 - series - Betoniera	-	1403823	10.0	16.01	73.0	F-8	G
8191.600	IN-EX	113 H/360, 3 - series - Betoniera	-	1403823	10.0	16.01	73.0	F-8	G
8189.100	IN	113 H/360, 3 - series - Betoniera	-	1523410	11.0	18.01	80.0	A-8	G
8189.100	IN	113 H/360, 3 - series - Betoniera	-	1523410	11.0	18.01	80.0	A-8	G
8190.100	EX	113 H/360, 3 - series - Betoniera	-	1523410	11.0	18.01	73.0	A-8	G
8190.100	EX	113 H/360, 3 - series - Betoniera	-	1523410	11.0	18.01	73.0	A-8	G
8191.600	IN-EX	113 H/360, 3 - series - Betoniera	-	1940008	10.0	16.01	73.0	F-8	G
8191.600	IN-EX	113 H/360, 3 - series - Betoniera	-	1940008	10.0	16.01	73.0	F-8	G
8189.100	IN	113 H/360, 3 - series - Betoniera	-	300957	11.0	18.01	80.0	A-8	G
8189.100	IN	113 H/360, 3 - series - Betoniera	-	300957	11.0	18.01	80.0	A-8	G
8190.100	EX	113 H/360, 3 - series - Betoniera	-	300957	11.0	18.01	73.0	A-8	G
8190.100	EX	113 H/360, 3 - series - Betoniera	-	300957	11.0	18.01	73.0	A-8	G
8191.600	IN-EX	113 H/360, 3 - series - Cassone ri	-	1403823	10.0	16.01	73.0	F-8	G
8191.600	IN-EX	113 H/360, 3 - series - Cassone ri	-	1403823	10.0	16.01	73.0	F-8	G
8191.600	IN-EX	113 H/360, 3 - series - Cassone ri	-	1403823	10.0	16.01	73.0	F-8	G
8191.600	IN-EX	113 H/360, 3 - series - Cassone ri	-	1403823	10.0	16.01	73.0	F-8	G
8191.600	IN-EX	113 H/360, 3 - series - Cassone ri	-	1403823	10.0	16.01	73.0	F-8	G
8191.600	IN-EX	113 H/360, 3 - series - Cassone ri	-	1403823	10.0	16.01	73.0	F-8	G
8189.100	IN	113 H/360, 3 - series - Cassone ri	-	1523410	11.0	18.01	80.0	A-8	G
8189.100	IN	113 H/360, 3 - series - Cassone ri	-	1523410	11.0	18.01	80.0	A-8	G
8189.100	IN	113 H/360, 3 - series - Cassone ri	-	1523410	11.0	18.01	80.0	A-8	G
8189.100	IN	113 H/360, 3 - series - Cassone ri	-	1523410	11.0	18.01	80.0	A-8	G
8189.100	IN	113 H/360, 3 - series - Cassone ri	-	1523410	11.0	18.01	80.0	A-8	G
8189.100	IN	113 H/360, 3 - series - Cassone ri	-	1523410	11.0	18.01	80.0	A-8	G
8190.100	EX	113 H/360, 3 - series - Cassone ri	-	1523410	11.0	18.01	73.0	A-8	G
8190.100	EX	113 H/360, 3 - series - Cassone ri	-	1523410	11.0	18.01	73.0	A-8	G
8190.100	EX	113 H/360, 3 - series - Cassone ri	-	1523410	11.0	18.01	73.0	A-8	G
8190.100	EX	113 H/360, 3 - series - Cassone ri	-	1523410	11.0	18.01	73.0	A-8	G
8190.100	EX	113 H/360, 3 - series - Cassone ri	-	1523410	11.0	18.01	73.0	A-8	G

(D1) Internal diameter, (D2) External diameter, (B) Shape, (C) Material

VALVE GUIDES

IVT Ref.	Type	Model	Engine	OEM Ref.	D1	D2	Length	B	C
SCANIA									
8190.100	EX	113 H/360, 3 - series - Cassone ri	-	1523410	11.0	18.01	73.0	A-8	G
8191.600	IN-EX	113 H/360, 3 - series - Cassone ri	-	1940008	10.0	16.01	73.0	F-8	G
8191.600	IN-EX	113 H/360, 3 - series - Cassone ri	-	1940008	10.0	16.01	73.0	F-8	G
8191.600	IN-EX	113 H/360, 3 - series - Cassone ri	-	1940008	10.0	16.01	73.0	F-8	G
8191.600	IN-EX	113 H/360, 3 - series - Cassone ri	-	1940008	10.0	16.01	73.0	F-8	G
8191.600	IN-EX	113 H/360, 3 - series - Cassone ri	-	1940008	10.0	16.01	73.0	F-8	G
8191.600	IN-EX	113 H/360, 3 - series - Cassone ri	-	1940008	10.0	16.01	73.0	F-8	G
8190.100	EX	113 H/360, 3 - series - Cassone ri	-	300957	11.0	18.01	73.0	A-8	G
8190.100	EX	113 H/360, 3 - series - Cassone ri	-	300957	11.0	18.01	73.0	A-8	G
8190.100	EX	113 H/360, 3 - series - Cassone ri	-	300957	11.0	18.01	73.0	A-8	G
8190.100	EX	113 H/360, 3 - series - Cassone ri	-	300957	11.0	18.01	73.0	A-8	G
8190.100	EX	113 H/360, 3 - series - Cassone ri	-	300957	11.0	18.01	73.0	A-8	G
8190.100	EX	113 H/360, 3 - series - Cassone ri	-	300957	11.0	18.01	73.0	A-8	G
8189.100	IN	113 H/360, 3 - series - Cassone ri	-	300957	11.0	18.01	80.0	A-8	G
8189.100	IN	113 H/360, 3 - series - Cassone ri	-	300957	11.0	18.01	80.0	A-8	G
8189.100	IN	113 H/360, 3 - series - Cassone ri	-	300957	11.0	18.01	80.0	A-8	G
8189.100	IN	113 H/360, 3 - series - Cassone ri	-	300957	11.0	18.01	80.0	A-8	G
8189.100	IN	113 H/360, 3 - series - Cassone ri	-	300957	11.0	18.01	80.0	A-8	G
8189.100	IN	113 H/360, 3 - series - Cassone ri	-	300957	11.0	18.01	80.0	A-8	G
8191.600	IN-EX	113 H/360, 3 - series - Pianale piat	-	1403823	10.0	16.01	73.0	F-8	G
8191.600	IN-EX	113 H/360, 3 - series - Pianale piat	-	1403823	10.0	16.01	73.0	F-8	G
8191.600	IN-EX	113 H/360, 3 - series - Pianale piat	-	1403823	10.0	16.01	73.0	F-8	G
8191.600	IN-EX	113 H/360, 3 - series - Pianale piat	-	1403823	10.0	16.01	73.0	F-8	G
8191.600	IN-EX	113 H/360, 3 - series - Pianale piat	-	1403823	10.0	16.01	73.0	F-8	G
8191.600	IN-EX	113 H/360, 3 - series - Pianale piat	-	1403823	10.0	16.01	73.0	F-8	G
8191.600	IN-EX	113 H/360, 3 - series - Pianale piat	-	1403823	10.0	16.01	73.0	F-8	G
8191.600	IN-EX	113 H/360, 3 - series - Pianale piat	-	1403823	10.0	16.01	73.0	F-8	G
8190.100	EX	113 H/360, 3 - series - Pianale piat	-	1523410	11.0	18.01	73.0	A-8	G
8189.100	IN	113 H/360, 3 - series - Pianale piat	-	1523410	11.0	18.01	80.0	A-8	G
8190.100	EX	113 H/360, 3 - series - Pianale piat	-	1523410	11.0	18.01	73.0	A-8	G
8190.100	EX	113 H/360, 3 - series - Pianale piat	-	1523410	11.0	18.01	73.0	A-8	G
8190.100	EX	113 H/360, 3 - series - Pianale piat	-	1523410	11.0	18.01	73.0	A-8	G
8190.100	EX	113 H/360, 3 - series - Pianale piat	-	1523410	11.0	18.01	73.0	A-8	G
8190.100	EX	113 H/360, 3 - series - Pianale piat	-	1523410	11.0	18.01	73.0	A-8	G
8189.100	IN	113 H/360, 3 - series - Pianale piat	-	1523410	11.0	18.01	80.0	A-8	G
8189.100	IN	113 H/360, 3 - series - Pianale piat	-	1523410	11.0	18.01	80.0	A-8	G
8189.100	IN	113 H/360, 3 - series - Pianale piat	-	1523410	11.0	18.01	80.0	A-8	G
8189.100	IN	113 H/360, 3 - series - Pianale piat	-	1523410	11.0	18.01	80.0	A-8	G
8189.100	IN	113 H/360, 3 - series - Pianale piat	-	1523410	11.0	18.01	80.0	A-8	G
8190.100	EX	113 H/360, 3 - series - Pianale piat	-	1523410	11.0	18.01	73.0	A-8	G
8189.100	IN	113 H/360, 3 - series - Pianale piat	-	1523410	11.0	18.01	80.0	A-8	G
8189.100	IN	113 H/360, 3 - series - Pianale piat	-	1523410	11.0	18.01	80.0	A-8	G
8190.100	EX	113 H/360, 3 - series - Pianale piat	-	1523410	11.0	18.01	73.0	A-8	G
8191.600	IN-EX	113 H/360, 3 - series - Pianale piat	-	1940008	10.0	16.01	73.0	F-8	G
8191.600	IN-EX	113 H/360, 3 - series - Pianale piat	-	1940008	10.0	16.01	73.0	F-8	G
8191.600	IN-EX	113 H/360, 3 - series - Pianale piat	-	1940008	10.0	16.01	73.0	F-8	G
8191.600	IN-EX	113 H/360, 3 - series - Pianale piat	-	1940008	10.0	16.01	73.0	F-8	G
8191.600	IN-EX	113 H/360, 3 - series - Pianale piat	-	1940008	10.0	16.01	73.0	F-8	G
8191.600	IN-EX	113 H/360, 3 - series - Pianale piat	-	1940008	10.0	16.01	73.0	F-8	G
8191.600	IN-EX	113 H/360, 3 - series - Pianale piat	-	1940008	10.0	16.01	73.0	F-8	G
8191.600	IN-EX	113 H/360, 3 - series - Pianale piat	-	1940008	10.0	16.01	73.0	F-8	G
8190.100	EX	113 H/360, 3 - series - Pianale piat	-	300957	11.0	18.01	73.0	A-8	G
8190.100	EX	113 H/360, 3 - series - Pianale piat	-	300957	11.0	18.01	73.0	A-8	G
8190.100	EX	113 H/360, 3 - series - Pianale piat	-	300957	11.0	18.01	73.0	A-8	G
8190.100	EX	113 H/360, 3 - series - Pianale piat	-	300957	11.0	18.01	73.0	A-8	G
8189.100	IN	113 H/360, 3 - series - Pianale piat	-	300957	11.0	18.01	80.0	A-8	G
8189.100	IN	113 H/360, 3 - series - Pianale piat	-	300957	11.0	18.01	80.0	A-8	G
8189.100	IN	113 H/360, 3 - series - Pianale piat	-	300957	11.0	18.01	80.0	A-8	G
8189.100	IN	113 H/360, 3 - series - Pianale piat	-	300957	11.0	18.01	80.0	A-8	G
8190.100	EX	113 H/360, 3 - series - Pianale piat	-	300957	11.0	18.01	73.0	A-8	G
8189.100	IN	113 H/360, 3 - series - Pianale piat	-	300957	11.0	18.01	80.0	A-8	G
8189.100	IN	113 H/360, 3 - series - Pianale piat	-	300957	11.0	18.01	80.0	A-8	G

(D1) Internal diameter, (D2) External diameter, (B) Shape, (C) Material

VALVE GUIDES

IVT Ref.	Type	Model	Engine	OEM Ref.	D1	D2	Length	B	C
SCANIA									
8190.100	EX	113 H/360, 3 - series - Pianale piat	-	300957	11.0	18.01	73.0	A-8	G
8190.100	EX	113 H/360, 3 - series - Pianale piat	-	300957	11.0	18.01	73.0	A-8	G
8190.100	EX	113 H/360, 3 - series - Pianale piat	-	300957	11.0	18.01	73.0	A-8	G
8189.100	IN	113 H/360, 3 - series - Pianale piat	-	300957	11.0	18.01	80.0	A-8	G
8189.100	IN	113 H/360, 3 - series - Pianale piat	-	300957	11.0	18.01	80.0	A-8	G
8191.600	IN-EX	113 H/360, 3 - series - Trattore per	-	1403823	10.0	16.01	73.0	F-8	G
8191.600	IN-EX	113 H/360, 3 - series - Trattore per	-	1403823	10.0	16.01	73.0	F-8	G
8191.600	IN-EX	113 H/360, 3 - series - Trattore per	-	1403823	10.0	16.01	73.0	F-8	G
8191.600	IN-EX	113 H/360, 3 - series - Trattore per	-	1403823	10.0	16.01	73.0	F-8	G
8191.600	IN-EX	113 H/360, 3 - series - Trattore per	-	1403823	10.0	16.01	73.0	F-8	G
8191.600	IN-EX	113 H/360, 3 - series - Trattore per	-	1403823	10.0	16.01	73.0	F-8	G
8189.100	IN	113 H/360, 3 - series - Trattore per	-	1523410	11.0	18.01	80.0	A-8	G
8190.100	EX	113 H/360, 3 - series - Trattore per	-	1523410	11.0	18.01	73.0	A-8	G
8190.100	EX	113 H/360, 3 - series - Trattore per	-	1523410	11.0	18.01	73.0	A-8	G
8190.100	EX	113 H/360, 3 - series - Trattore per	-	1523410	11.0	18.01	73.0	A-8	G
8189.100	IN	113 H/360, 3 - series - Trattore per	-	1523410	11.0	18.01	80.0	A-8	G
8190.100	EX	113 H/360, 3 - series - Trattore per	-	1523410	11.0	18.01	73.0	A-8	G
8189.100	IN	113 H/360, 3 - series - Trattore per	-	1523410	11.0	18.01	80.0	A-8	G
8189.100	IN	113 H/360, 3 - series - Trattore per	-	1523410	11.0	18.01	80.0	A-8	G
8190.100	EX	113 H/360, 3 - series - Trattore per	-	1523410	11.0	18.01	73.0	A-8	G
8190.100	EX	113 H/360, 3 - series - Trattore per	-	1523410	11.0	18.01	73.0	A-8	G
8189.100	IN	113 H/360, 3 - series - Trattore per	-	1523410	11.0	18.01	80.0	A-8	G
8189.100	IN	113 H/360, 3 - series - Trattore per	-	1523410	11.0	18.01	80.0	A-8	G
8191.600	IN-EX	113 H/360, 3 - series - Trattore per	-	1940008	10.0	16.01	73.0	F-8	G
8191.600	IN-EX	113 H/360, 3 - series - Trattore per	-	1940008	10.0	16.01	73.0	F-8	G
8191.600	IN-EX	113 H/360, 3 - series - Trattore per	-	1940008	10.0	16.01	73.0	F-8	G
8191.600	IN-EX	113 H/360, 3 - series - Trattore per	-	1940008	10.0	16.01	73.0	F-8	G
8191.600	IN-EX	113 H/360, 3 - series - Trattore per	-	1940008	10.0	16.01	73.0	F-8	G
8191.600	IN-EX	113 H/360, 3 - series - Trattore per	-	1940008	10.0	16.01	73.0	F-8	G
8190.100	EX	113 H/360, 3 - series - Trattore per	-	300957	11.0	18.01	73.0	A-8	G
8190.100	EX	113 H/360, 3 - series - Trattore per	-	300957	11.0	18.01	73.0	A-8	G
8190.100	EX	113 H/360, 3 - series - Trattore per	-	300957	11.0	18.01	73.0	A-8	G
8190.100	EX	113 H/360, 3 - series - Trattore per	-	300957	11.0	18.01	73.0	A-8	G
8190.100	EX	113 H/360, 3 - series - Trattore per	-	300957	11.0	18.01	73.0	A-8	G
8189.100	IN	113 H/360, 3 - series - Trattore per	-	300957	11.0	18.01	80.0	A-8	G
8189.100	IN	113 H/360, 3 - series - Trattore per	-	300957	11.0	18.01	80.0	A-8	G
8189.100	IN	113 H/360, 3 - series - Trattore per	-	300957	11.0	18.01	80.0	A-8	G
8189.100	IN	113 H/360, 3 - series - Trattore per	-	300957	11.0	18.01	80.0	A-8	G
8189.100	IN	113 H/360, 3 - series - Trattore per	-	300957	11.0	18.01	80.0	A-8	G
8189.100	IN	113 H/360, 3 - series - Trattore per	-	300957	11.0	18.01	80.0	A-8	G
8190.100	EX	113 H/360, 3 - series - Trattore per	-	300957	11.0	18.01	73.0	A-8	G
8191.600	IN-EX	113 H/380, 3 - series - Betoniera	-	1403823	10.0	16.01	73.0	F-8	G
8190.100	EX	113 H/380, 3 - series - Betoniera	-	1523410	11.0	18.01	73.0	A-8	G
8189.100	IN	113 H/380, 3 - series - Betoniera	-	1523410	11.0	18.01	80.0	A-8	G
8191.600	IN-EX	113 H/380, 3 - series - Betoniera	-	1940008	10.0	16.01	73.0	F-8	G
8190.100	EX	113 H/380, 3 - series - Betoniera	-	300957	11.0	18.01	73.0	A-8	G
8189.100	IN	113 H/380, 3 - series - Betoniera	-	300957	11.0	18.01	80.0	A-8	G
8191.600	IN-EX	113 H/380, 3 - series - Cassone ri	-	1403823	10.0	16.01	73.0	F-8	G
8191.600	IN-EX	113 H/380, 3 - series - Cassone ri	-	1403823	10.0	16.01	73.0	F-8	G
8189.100	IN	113 H/380, 3 - series - Cassone ri	-	1523410	11.0	18.01	80.0	A-8	G
8189.100	IN	113 H/380, 3 - series - Cassone ri	-	1523410	11.0	18.01	80.0	A-8	G
8190.100	EX	113 H/380, 3 - series - Cassone ri	-	1523410	11.0	18.01	73.0	A-8	G
8190.100	EX	113 H/380, 3 - series - Cassone ri	-	1523410	11.0	18.01	73.0	A-8	G
8191.600	IN-EX	113 H/380, 3 - series - Cassone ri	-	1940008	10.0	16.01	73.0	F-8	G
8191.600	IN-EX	113 H/380, 3 - series - Cassone ri	-	1940008	10.0	16.01	73.0	F-8	G
8190.100	EX	113 H/380, 3 - series - Cassone ri	-	300957	11.0	18.01	73.0	A-8	G
8190.100	EX	113 H/380, 3 - series - Cassone ri	-	300957	11.0	18.01	73.0	A-8	G
8189.100	IN	113 H/380, 3 - series - Cassone ri	-	300957	11.0	18.01	80.0	A-8	G
8189.100	IN	113 H/380, 3 - series - Cassone ri	-	300957	11.0	18.01	80.0	A-8	G
8191.600	IN-EX	113 H/380, 3 - series - Pianale piat	-	1403823	10.0	16.01	73.0	F-8	G
8191.600	IN-EX	113 H/380, 3 - series - Pianale piat	-	1403823	10.0	16.01	73.0	F-8	G
8191.600	IN-EX	113 H/380, 3 - series - Pianale piat	-	1403823	10.0	16.01	73.0	F-8	G

(D1) Internal diameter, (D2) External diameter, (B) Shape, (C) Material

VALVE GUIDES

IVT Ref.	Type	Model	Engine	OEM Ref.	D1	D2	Length	B	C
SCANIA									
8189.100	IN	113 H/380, 3 - series - Pianale piat	-	1523410	11.0	18.01	80.0	A-8	G
8189.100	IN	113 H/380, 3 - series - Pianale piat	-	1523410	11.0	18.01	80.0	A-8	G
8190.100	EX	113 H/380, 3 - series - Pianale piat	-	1523410	11.0	18.01	73.0	A-8	G
8189.100	IN	113 H/380, 3 - series - Pianale piat	-	1523410	11.0	18.01	80.0	A-8	G
8190.100	EX	113 H/380, 3 - series - Pianale piat	-	1523410	11.0	18.01	73.0	A-8	G
8190.100	EX	113 H/380, 3 - series - Pianale piat	-	1523410	11.0	18.01	73.0	A-8	G
8191.600	IN-EX	113 H/380, 3 - series - Pianale piat	-	1940008	10.0	16.01	73.0	F-8	G
8191.600	IN-EX	113 H/380, 3 - series - Pianale piat	-	1940008	10.0	16.01	73.0	F-8	G
8191.600	IN-EX	113 H/380, 3 - series - Pianale piat	-	1940008	10.0	16.01	73.0	F-8	G
8190.100	EX	113 H/380, 3 - series - Pianale piat	-	300957	11.0	18.01	73.0	A-8	G
8190.100	EX	113 H/380, 3 - series - Pianale piat	-	300957	11.0	18.01	73.0	A-8	G
8189.100	IN	113 H/380, 3 - series - Pianale piat	-	300957	11.0	18.01	80.0	A-8	G
8189.100	IN	113 H/380, 3 - series - Pianale piat	-	300957	11.0	18.01	80.0	A-8	G
8189.100	IN	113 H/380, 3 - series - Pianale piat	-	300957	11.0	18.01	80.0	A-8	G
8190.100	EX	113 H/380, 3 - series - Pianale piat	-	300957	11.0	18.01	73.0	A-8	G
8191.600	IN-EX	113 H/380, 3 - series - Trattore per	-	1403823	10.0	16.01	73.0	F-8	G
8191.600	IN-EX	113 H/380, 3 - series - Trattore per	-	1403823	10.0	16.01	73.0	F-8	G
8191.600	IN-EX	113 H/380, 3 - series - Trattore per	-	1403823	10.0	16.01	73.0	F-8	G
8189.100	IN	113 H/380, 3 - series - Trattore per	-	1523410	11.0	18.01	80.0	A-8	G
8190.100	EX	113 H/380, 3 - series - Trattore per	-	1523410	11.0	18.01	73.0	A-8	G
8190.100	EX	113 H/380, 3 - series - Trattore per	-	1523410	11.0	18.01	73.0	A-8	G
8189.100	IN	113 H/380, 3 - series - Trattore per	-	1523410	11.0	18.01	80.0	A-8	G
8190.100	EX	113 H/380, 3 - series - Trattore per	-	1523410	11.0	18.01	73.0	A-8	G
8189.100	IN	113 H/380, 3 - series - Trattore per	-	1523410	11.0	18.01	80.0	A-8	G
8191.600	IN-EX	113 H/380, 3 - series - Trattore per	-	1940008	10.0	16.01	73.0	F-8	G
8191.600	IN-EX	113 H/380, 3 - series - Trattore per	-	1940008	10.0	16.01	73.0	F-8	G
8191.600	IN-EX	113 H/380, 3 - series - Trattore per	-	1940008	10.0	16.01	73.0	F-8	G
8189.100	IN	113 H/380, 3 - series - Trattore per	-	300957	11.0	18.01	80.0	A-8	G
8189.100	IN	113 H/380, 3 - series - Trattore per	-	300957	11.0	18.01	80.0	A-8	G
8189.100	IN	113 H/380, 3 - series - Trattore per	-	300957	11.0	18.01	80.0	A-8	G
8190.100	EX	113 H/380, 3 - series - Trattore per	-	300957	11.0	18.01	73.0	A-8	G
8190.100	EX	113 H/380, 3 - series - Trattore per	-	300957	11.0	18.01	73.0	A-8	G
8190.100	EX	113 H/380, 3 - series - Trattore per	-	300957	11.0	18.01	73.0	A-8	G
8191.600	IN-EX	113 M/320, 3 - series - Betoniera	-	1403823	10.0	16.01	73.0	F-8	G
8189.100	IN	113 M/320, 3 - series - Betoniera	-	1523410	11.0	18.01	80.0	A-8	G
8190.100	EX	113 M/320, 3 - series - Betoniera	-	1523410	11.0	18.01	73.0	A-8	G
8191.600	IN-EX	113 M/320, 3 - series - Betoniera	-	1940008	10.0	16.01	73.0	F-8	G
8189.100	IN	113 M/320, 3 - series - Betoniera	-	300957	11.0	18.01	80.0	A-8	G
8190.100	EX	113 M/320, 3 - series - Betoniera	-	300957	11.0	18.01	73.0	A-8	G
8191.600	IN-EX	113 M/320, 3 - series - Pianale pia	-	1403823	10.0	16.01	73.0	F-8	G
8191.600	IN-EX	113 M/320, 3 - series - Pianale pia	-	1403823	10.0	16.01	73.0	F-8	G
8191.600	IN-EX	113 M/320, 3 - series - Pianale pia	-	1403823	10.0	16.01	73.0	F-8	G
8191.600	IN-EX	113 M/320, 3 - series - Pianale pia	-	1403823	10.0	16.01	73.0	F-8	G
8190.100	EX	113 M/320, 3 - series - Pianale pia	-	1523410	11.0	18.01	73.0	A-8	G
8190.100	EX	113 M/320, 3 - series - Pianale pia	-	1523410	11.0	18.01	73.0	A-8	G
8190.100	EX	113 M/320, 3 - series - Pianale pia	-	1523410	11.0	18.01	73.0	A-8	G
8189.100	IN	113 M/320, 3 - series - Pianale pia	-	1523410	11.0	18.01	80.0	A-8	G
8189.100	IN	113 M/320, 3 - series - Pianale pia	-	1523410	11.0	18.01	80.0	A-8	G
8189.100	IN	113 M/320, 3 - series - Pianale pia	-	1523410	11.0	18.01	80.0	A-8	G
8191.600	IN-EX	113 M/320, 3 - series - Pianale pia	-	1940008	10.0	16.01	73.0	F-8	G
8191.600	IN-EX	113 M/320, 3 - series - Pianale pia	-	1940008	10.0	16.01	73.0	F-8	G
8191.600	IN-EX	113 M/320, 3 - series - Pianale pia	-	1940008	10.0	16.01	73.0	F-8	G
8191.600	IN-EX	113 M/320, 3 - series - Pianale pia	-	1940008	10.0	16.01	73.0	F-8	G
8190.100	EX	113 M/320, 3 - series - Pianale pia	-	300957	11.0	18.01	73.0	A-8	G
8189.100	IN	113 M/320, 3 - series - Pianale pia	-	300957	11.0	18.01	80.0	A-8	G
8189.100	IN	113 M/320, 3 - series - Pianale pia	-	300957	11.0	18.01	80.0	A-8	G
8190.100	EX	113 M/320, 3 - series - Pianale pia	-	300957	11.0	18.01	73.0	A-8	G
8189.100	IN	113 M/320, 3 - series - Pianale pia	-	300957	11.0	18.01	80.0	A-8	G
8190.100	EX	113 M/320, 3 - series - Pianale pia	-	300957	11.0	18.01	73.0	A-8	G
8191.600	IN-EX	113 M/320, 3 - series - Trattore pe	-	1403823	10.0	16.01	73.0	F-8	G
8191.600	IN-EX	113 M/320, 3 - series - Trattore pe	-	1403823	10.0	16.01	73.0	F-8	G
8191.600	IN-EX	113 M/320, 3 - series - Trattore pe	-	1403823	10.0	16.01	73.0	F-8	G

(D1) Internal diameter, (D2) External diameter, (B) Shape, (C) Material

VALVE GUIDES

IVT Ref.	Type	Model	Engine	OEM Ref.	D1	D2	Length	B	C
SCANIA									
8191.600	IN-EX	113 M/320, 3 - series - Trattore pe	-	1403823	10.0	16.01	73.0	F-8	G
8191.600	IN-EX	113 M/320, 3 - series - Trattore pe	-	1403823	10.0	16.01	73.0	F-8	G
8189.100	IN	113 M/320, 3 - series - Trattore pe	-	1523410	11.0	18.01	80.0	A-8	G
8190.100	EX	113 M/320, 3 - series - Trattore pe	-	1523410	11.0	18.01	73.0	A-8	G
8189.100	IN	113 M/320, 3 - series - Trattore pe	-	1523410	11.0	18.01	80.0	A-8	G
8189.100	IN	113 M/320, 3 - series - Trattore pe	-	1523410	11.0	18.01	80.0	A-8	G
8190.100	EX	113 M/320, 3 - series - Trattore pe	-	1523410	11.0	18.01	73.0	A-8	G
8190.100	EX	113 M/320, 3 - series - Trattore pe	-	1523410	11.0	18.01	73.0	A-8	G
8189.100	IN	113 M/320, 3 - series - Trattore pe	-	1523410	11.0	18.01	80.0	A-8	G
8190.100	EX	113 M/320, 3 - series - Trattore pe	-	1523410	11.0	18.01	73.0	A-8	G
8190.100	EX	113 M/320, 3 - series - Trattore pe	-	1523410	11.0	18.01	73.0	A-8	G
8189.100	IN	113 M/320, 3 - series - Trattore pe	-	1523410	11.0	18.01	80.0	A-8	G
8191.600	IN-EX	113 M/320, 3 - series - Trattore pe	-	1940008	10.0	16.01	73.0	F-8	G
8191.600	IN-EX	113 M/320, 3 - series - Trattore pe	-	1940008	10.0	16.01	73.0	F-8	G
8191.600	IN-EX	113 M/320, 3 - series - Trattore pe	-	1940008	10.0	16.01	73.0	F-8	G
8191.600	IN-EX	113 M/320, 3 - series - Trattore pe	-	1940008	10.0	16.01	73.0	F-8	G
8191.600	IN-EX	113 M/320, 3 - series - Trattore pe	-	1940008	10.0	16.01	73.0	F-8	G
8190.100	EX	113 M/320, 3 - series - Trattore pe	-	300957	11.0	18.01	73.0	A-8	G
8189.100	IN	113 M/320, 3 - series - Trattore pe	-	300957	11.0	18.01	80.0	A-8	G
8189.100	IN	113 M/320, 3 - series - Trattore pe	-	300957	11.0	18.01	80.0	A-8	G
8189.100	IN	113 M/320, 3 - series - Trattore pe	-	300957	11.0	18.01	80.0	A-8	G
8189.100	IN	113 M/320, 3 - series - Trattore pe	-	300957	11.0	18.01	80.0	A-8	G
8190.100	EX	113 M/320, 3 - series - Trattore pe	-	300957	11.0	18.01	73.0	A-8	G
8190.100	EX	113 M/320, 3 - series - Trattore pe	-	300957	11.0	18.01	73.0	A-8	G
8190.100	EX	113 M/320, 3 - series - Trattore pe	-	300957	11.0	18.01	73.0	A-8	G
8190.100	EX	113 M/320, 3 - series - Trattore pe	-	300957	11.0	18.01	73.0	A-8	G
8189.100	IN	113 M/320, 3 - series - Trattore pe	-	300957	11.0	18.01	80.0	A-8	G
8191.600	IN-EX	113 M/360, 3 - series - Betoniera	-	1403823	10.0	16.01	73.0	F-8	G
8189.100	IN	113 M/360, 3 - series - Betoniera	-	1523410	11.0	18.01	80.0	A-8	G
8190.100	EX	113 M/360, 3 - series - Betoniera	-	1523410	11.0	18.01	73.0	A-8	G
8191.600	IN-EX	113 M/360, 3 - series - Betoniera	-	1940008	10.0	16.01	73.0	F-8	G
8189.100	IN	113 M/360, 3 - series - Betoniera	-	300957	11.0	18.01	80.0	A-8	G
8190.100	EX	113 M/360, 3 - series - Betoniera	-	300957	11.0	18.01	73.0	A-8	G
8191.600	IN-EX	113 M/360, 3 - series - Pianale pia	-	1403823	10.0	16.01	73.0	F-8	G
8191.600	IN-EX	113 M/360, 3 - series - Pianale pia	-	1403823	10.0	16.01	73.0	F-8	G
8191.600	IN-EX	113 M/360, 3 - series - Pianale pia	-	1403823	10.0	16.01	73.0	F-8	G
8191.600	IN-EX	113 M/360, 3 - series - Pianale pia	-	1403823	10.0	16.01	73.0	F-8	G
8189.100	IN	113 M/360, 3 - series - Pianale pia	-	1523410	11.0	18.01	80.0	A-8	G
8189.100	IN	113 M/360, 3 - series - Pianale pia	-	1523410	11.0	18.01	80.0	A-8	G
8189.100	IN	113 M/360, 3 - series - Pianale pia	-	1523410	11.0	18.01	80.0	A-8	G
8189.100	IN	113 M/360, 3 - series - Pianale pia	-	1523410	11.0	18.01	80.0	A-8	G
8190.100	EX	113 M/360, 3 - series - Pianale pia	-	1523410	11.0	18.01	73.0	A-8	G
8190.100	EX	113 M/360, 3 - series - Pianale pia	-	1523410	11.0	18.01	73.0	A-8	G
8190.100	EX	113 M/360, 3 - series - Pianale pia	-	1523410	11.0	18.01	73.0	A-8	G
8190.100	EX	113 M/360, 3 - series - Pianale pia	-	1523410	11.0	18.01	73.0	A-8	G
8191.600	IN-EX	113 M/360, 3 - series - Pianale pia	-	1940008	10.0	16.01	73.0	F-8	G
8191.600	IN-EX	113 M/360, 3 - series - Pianale pia	-	1940008	10.0	16.01	73.0	F-8	G
8191.600	IN-EX	113 M/360, 3 - series - Pianale pia	-	1940008	10.0	16.01	73.0	F-8	G
8191.600	IN-EX	113 M/360, 3 - series - Pianale pia	-	1940008	10.0	16.01	73.0	F-8	G
8189.100	IN	113 M/360, 3 - series - Pianale pia	-	300957	11.0	18.01	80.0	A-8	G
8189.100	IN	113 M/360, 3 - series - Pianale pia	-	300957	11.0	18.01	80.0	A-8	G
8189.100	IN	113 M/360, 3 - series - Pianale pia	-	300957	11.0	18.01	80.0	A-8	G
8189.100	IN	113 M/360, 3 - series - Pianale pia	-	300957	11.0	18.01	80.0	A-8	G
8190.100	EX	113 M/360, 3 - series - Pianale pia	-	300957	11.0	18.01	73.0	A-8	G
8190.100	EX	113 M/360, 3 - series - Pianale pia	-	300957	11.0	18.01	73.0	A-8	G
8190.100	EX	113 M/360, 3 - series - Pianale pia	-	300957	11.0	18.01	73.0	A-8	G
8190.100	EX	113 M/360, 3 - series - Pianale pia	-	300957	11.0	18.01	73.0	A-8	G
8191.600	IN-EX	113 M/360, 3 - series - Trattore pe	-	1403823	10.0	16.01	73.0	F-8	G
8191.600	IN-EX	113 M/360, 3 - series - Trattore pe	-	1403823	10.0	16.01	73.0	F-8	G
8191.600	IN-EX	113 M/360, 3 - series - Trattore pe	-	1403823	10.0	16.01	73.0	F-8	G
8191.600	IN-EX	113 M/360, 3 - series - Trattore pe	-	1403823	10.0	16.01	73.0	F-8	G
8189.100	IN	113 M/360, 3 - series - Trattore pe	-	1523410	11.0	18.01	80.0	A-8	G

(D1) Internal diameter, (D2) External diameter, (B) Shape, (C) Material

VALVE GUIDES

IVT Ref.	Type	Model	Engine	OEM Ref.	D1	D2	Length	B	C
SCANIA									
8189.100	IN	113 M/360, 3 - series - Trattore pe	-	1523410	11.0	18.01	80.0	A-8	G
8189.100	IN	113 M/360, 3 - series - Trattore pe	-	1523410	11.0	18.01	80.0	A-8	G
8189.100	IN	113 M/360, 3 - series - Trattore pe	-	1523410	11.0	18.01	80.0	A-8	G
8190.100	EX	113 M/360, 3 - series - Trattore pe	-	1523410	11.0	18.01	73.0	A-8	G
8190.100	EX	113 M/360, 3 - series - Trattore pe	-	1523410	11.0	18.01	73.0	A-8	G
8190.100	EX	113 M/360, 3 - series - Trattore pe	-	1523410	11.0	18.01	73.0	A-8	G
8190.100	EX	113 M/360, 3 - series - Trattore pe	-	1523410	11.0	18.01	73.0	A-8	G
8191.600	IN-EX	113 M/360, 3 - series - Trattore pe	-	1940008	10.0	16.01	73.0	F-8	G
8191.600	IN-EX	113 M/360, 3 - series - Trattore pe	-	1940008	10.0	16.01	73.0	F-8	G
8191.600	IN-EX	113 M/360, 3 - series - Trattore pe	-	1940008	10.0	16.01	73.0	F-8	G
8191.600	IN-EX	113 M/360, 3 - series - Trattore pe	-	1940008	10.0	16.01	73.0	F-8	G
8189.100	IN	113 M/360, 3 - series - Trattore pe	-	300957	11.0	18.01	80.0	A-8	G
8189.100	IN	113 M/360, 3 - series - Trattore pe	-	300957	11.0	18.01	80.0	A-8	G
8189.100	IN	113 M/360, 3 - series - Trattore pe	-	300957	11.0	18.01	80.0	A-8	G
8189.100	IN	113 M/360, 3 - series - Trattore pe	-	300957	11.0	18.01	80.0	A-8	G
8190.100	EX	113 M/360, 3 - series - Trattore pe	-	300957	11.0	18.01	73.0	A-8	G
8190.100	EX	113 M/360, 3 - series - Trattore pe	-	300957	11.0	18.01	73.0	A-8	G
8190.100	EX	113 M/360, 3 - series - Trattore pe	-	300957	11.0	18.01	73.0	A-8	G
8190.100	EX	113 M/360, 3 - series - Trattore pe	-	300957	11.0	18.01	73.0	A-8	G
8191.600	IN-EX	113 M/380, 3 - series - Pianale pia	-	1403823	10.0	16.01	73.0	F-8	G
8191.600	IN-EX	113 M/380, 3 - series - Pianale pia	-	1403823	10.0	16.01	73.0	F-8	G
8189.100	IN	113 M/380, 3 - series - Pianale pia	-	1523410	11.0	18.01	80.0	A-8	G
8189.100	IN	113 M/380, 3 - series - Pianale pia	-	1523410	11.0	18.01	80.0	A-8	G
8190.100	EX	113 M/380, 3 - series - Pianale pia	-	1523410	11.0	18.01	73.0	A-8	G
8190.100	EX	113 M/380, 3 - series - Pianale pia	-	1523410	11.0	18.01	73.0	A-8	G
8191.600	IN-EX	113 M/380, 3 - series - Pianale pia	-	1940008	10.0	16.01	73.0	F-8	G
8191.600	IN-EX	113 M/380, 3 - series - Pianale pia	-	1940008	10.0	16.01	73.0	F-8	G
8189.100	IN	113 M/380, 3 - series - Pianale pia	-	300957	11.0	18.01	80.0	A-8	G
8189.100	IN	113 M/380, 3 - series - Pianale pia	-	300957	11.0	18.01	80.0	A-8	G
8190.100	EX	113 M/380, 3 - series - Pianale pia	-	300957	11.0	18.01	73.0	A-8	G
8190.100	EX	113 M/380, 3 - series - Pianale pia	-	300957	11.0	18.01	73.0	A-8	G
8191.600	IN-EX	113 M/380, 3 - series - Trattore pe	-	1403823	10.0	16.01	73.0	F-8	G
8191.600	IN-EX	113 M/380, 3 - series - Trattore pe	-	1403823	10.0	16.01	73.0	F-8	G
8189.100	IN	113 M/380, 3 - series - Trattore pe	-	1523410	11.0	18.01	80.0	A-8	G
8189.100	IN	113 M/380, 3 - series - Trattore pe	-	1523410	11.0	18.01	80.0	A-8	G
8190.100	EX	113 M/380, 3 - series - Trattore pe	-	1523410	11.0	18.01	73.0	A-8	G
8190.100	EX	113 M/380, 3 - series - Trattore pe	-	1523410	11.0	18.01	73.0	A-8	G
8191.600	IN-EX	113 M/380, 3 - series - Trattore pe	-	1940008	10.0	16.01	73.0	F-8	G
8191.600	IN-EX	113 M/380, 3 - series - Trattore pe	-	1940008	10.0	16.01	73.0	F-8	G
8189.100	IN	113 M/380, 3 - series - Trattore pe	-	300957	11.0	18.01	80.0	A-8	G
8189.100	IN	113 M/380, 3 - series - Trattore pe	-	300957	11.0	18.01	80.0	A-8	G
8190.100	EX	113 M/380, 3 - series - Trattore pe	-	300957	11.0	18.01	73.0	A-8	G
8190.100	EX	113 M/380, 3 - series - Trattore pe	-	300957	11.0	18.01	73.0	A-8	G
8191.600	IN-EX	113 M/400, 3 - series - Pianale pia	-	1403823	10.0	16.01	73.0	F-8	G
8191.600	IN-EX	113 M/400, 3 - series - Pianale pia	-	1403823	10.0	16.01	73.0	F-8	G
8191.600	IN-EX	113 M/400, 3 - series - Pianale pia	-	1940008	10.0	16.01	73.0	F-8	G
8191.600	IN-EX	113 M/400, 3 - series - Pianale pia	-	1940008	10.0	16.01	73.0	F-8	G
8191.600	IN-EX	113 M/400, 3 - series - Trattore pe	-	1403823	10.0	16.01	73.0	F-8	G
8191.600	IN-EX	113 M/400, 3 - series - Trattore pe	-	1940008	10.0	16.01	73.0	F-8	G
8189.100	IN	142 E/390, 2 - series - Pianale piat	-	1523410	11.0	18.01	80.0	A-8	G
8190.100	EX	142 E/390, 2 - series - Pianale piat	-	1523410	11.0	18.01	73.0	A-8	G
8189.100	IN	142 E/390, 2 - series - Pianale piat	-	300957	11.0	18.01	80.0	A-8	G
8190.100	EX	142 E/390, 2 - series - Pianale piat	-	300957	11.0	18.01	73.0	A-8	G
8189.100	IN	142 H/390, 2 - series - Pianale piat	-	1523410	11.0	18.01	80.0	A-8	G
8189.100	IN	142 H/390, 2 - series - Pianale piat	-	1523410	11.0	18.01	80.0	A-8	G
8189.100	IN	142 H/390, 2 - series - Pianale piat	-	1523410	11.0	18.01	80.0	A-8	G
8190.100	EX	142 H/390, 2 - series - Pianale piat	-	1523410	11.0	18.01	73.0	A-8	G
8190.100	EX	142 H/390, 2 - series - Pianale piat	-	1523410	11.0	18.01	73.0	A-8	G
8190.100	EX	142 H/390, 2 - series - Pianale piat	-	1523410	11.0	18.01	73.0	A-8	G
8189.100	IN	142 H/390, 2 - series - Pianale piat	-	300957	11.0	18.01	80.0	A-8	G
8189.100	IN	142 H/390, 2 - series - Pianale piat	-	300957	11.0	18.01	80.0	A-8	G
8190.100	EX	142 H/390, 2 - series - Pianale piat	-	300957	11.0	18.01	73.0	A-8	G

(D1) Internal diameter, (D2) External diameter, (B) Shape, (C) Material

VALVE GUIDES

IVT Ref.	Type	Model	Engine	OEM Ref.	D1	D2	Length	B	C
SCANIA									
8190.100	EX	142 H/390, 2 - series - Pianale piat	-	300957	11.0	18.01	73.0	A-8	G
8190.100	EX	142 H/390, 2 - series - Pianale piat	-	300957	11.0	18.01	73.0	A-8	G
8189.100	IN	142 H/390, 2 - series - Pianale piat	-	300957	11.0	18.01	80.0	A-8	G
8189.100	IN	142 H/390, 2 - series - Trattore per	-	1523410	11.0	18.01	80.0	A-8	G
8189.100	IN	142 H/390, 2 - series - Trattore per	-	1523410	11.0	18.01	80.0	A-8	G
8189.100	IN	142 H/390, 2 - series - Trattore per	-	1523410	11.0	18.01	80.0	A-8	G
8190.100	EX	142 H/390, 2 - series - Trattore per	-	1523410	11.0	18.01	73.0	A-8	G
8190.100	EX	142 H/390, 2 - series - Trattore per	-	1523410	11.0	18.01	73.0	A-8	G
8190.100	EX	142 H/390, 2 - series - Trattore per	-	1523410	11.0	18.01	73.0	A-8	G
8189.100	IN	142 H/390, 2 - series - Trattore per	-	300957	11.0	18.01	80.0	A-8	G
8189.100	IN	142 H/390, 2 - series - Trattore per	-	300957	11.0	18.01	80.0	A-8	G
8189.100	IN	142 H/390, 2 - series - Trattore per	-	300957	11.0	18.01	80.0	A-8	G
8190.100	EX	142 H/390, 2 - series - Trattore per	-	300957	11.0	18.01	73.0	A-8	G
8190.100	EX	142 H/390, 2 - series - Trattore per	-	300957	11.0	18.01	73.0	A-8	G
8190.100	EX	142 H/390, 2 - series - Trattore per	-	300957	11.0	18.01	73.0	A-8	G
8190.100	EX	142 H/410, 2 - series - Pianale piat	-	1523410	11.0	18.01	73.0	A-8	G
8190.100	EX	142 H/410, 2 - series - Pianale piat	-	1523410	11.0	18.01	73.0	A-8	G
8189.100	IN	142 H/410, 2 - series - Pianale piat	-	1523410	11.0	18.01	80.0	A-8	G
8190.100	EX	142 H/410, 2 - series - Pianale piat	-	1523410	11.0	18.01	73.0	A-8	G
8189.100	IN	142 H/410, 2 - series - Pianale piat	-	1523410	11.0	18.01	80.0	A-8	G
8190.100	EX	142 H/410, 2 - series - Pianale piat	-	1523410	11.0	18.01	73.0	A-8	G
8189.100	IN	142 H/410, 2 - series - Pianale piat	-	1523410	11.0	18.01	80.0	A-8	G
8189.100	IN	142 H/410, 2 - series - Pianale piat	-	1523410	11.0	18.01	80.0	A-8	G
8189.100	IN	142 H/410, 2 - series - Pianale piat	-	300957	11.0	18.01	80.0	A-8	G
8190.100	EX	142 H/410, 2 - series - Pianale piat	-	300957	11.0	18.01	73.0	A-8	G
8190.100	EX	142 H/410, 2 - series - Pianale piat	-	300957	11.0	18.01	73.0	A-8	G
8189.100	IN	142 H/410, 2 - series - Pianale piat	-	300957	11.0	18.01	80.0	A-8	G
8190.100	EX	142 H/410, 2 - series - Pianale piat	-	300957	11.0	18.01	73.0	A-8	G
8190.100	EX	142 H/410, 2 - series - Pianale piat	-	300957	11.0	18.01	73.0	A-8	G
8189.100	IN	142 H/410, 2 - series - Pianale piat	-	300957	11.0	18.01	80.0	A-8	G
8189.100	IN	142 H/410, 2 - series - Pianale piat	-	300957	11.0	18.01	80.0	A-8	G
8190.100	EX	142 H/410, 2 - series - Trattore per	-	1523410	11.0	18.01	73.0	A-8	G
8190.100	EX	142 H/410, 2 - series - Trattore per	-	1523410	11.0	18.01	73.0	A-8	G
8190.100	EX	142 H/410, 2 - series - Trattore per	-	1523410	11.0	18.01	73.0	A-8	G
8189.100	IN	142 H/410, 2 - series - Trattore per	-	1523410	11.0	18.01	80.0	A-8	G
8190.100	EX	142 H/410, 2 - series - Trattore per	-	1523410	11.0	18.01	73.0	A-8	G
8189.100	IN	142 H/410, 2 - series - Trattore per	-	1523410	11.0	18.01	80.0	A-8	G
8189.100	IN	142 H/410, 2 - series - Trattore per	-	1523410	11.0	18.01	80.0	A-8	G
8189.100	IN	142 H/410, 2 - series - Trattore per	-	1523410	11.0	18.01	80.0	A-8	G
8189.100	IN	142 H/410, 2 - series - Trattore per	-	300957	11.0	18.01	80.0	A-8	G
8189.100	IN	142 H/410, 2 - series - Trattore per	-	300957	11.0	18.01	80.0	A-8	G
8189.100	IN	142 H/410, 2 - series - Trattore per	-	300957	11.0	18.01	80.0	A-8	G
8189.100	IN	142 H/410, 2 - series - Trattore per	-	300957	11.0	18.01	80.0	A-8	G
8190.100	EX	142 H/410, 2 - series - Trattore per	-	300957	11.0	18.01	73.0	A-8	G
8190.100	EX	142 H/410, 2 - series - Trattore per	-	300957	11.0	18.01	73.0	A-8	G
8190.100	EX	142 H/410, 2 - series - Trattore per	-	300957	11.0	18.01	73.0	A-8	G
8190.100	EX	142 H/410, 2 - series - Trattore per	-	300957	11.0	18.01	73.0	A-8	G
8190.100	EX	142 M/390, 2 - series - Pianale pia	-	1523410	11.0	18.01	73.0	A-8	G
8189.100	IN	142 M/390, 2 - series - Pianale pia	-	1523410	11.0	18.01	80.0	A-8	G
8189.100	IN	142 M/390, 2 - series - Pianale pia	-	1523410	11.0	18.01	80.0	A-8	G
8190.100	EX	142 M/390, 2 - series - Pianale pia	-	1523410	11.0	18.01	73.0	A-8	G
8189.100	IN	142 M/390, 2 - series - Pianale pia	-	300957	11.0	18.01	80.0	A-8	G
8190.100	EX	142 M/390, 2 - series - Pianale pia	-	300957	11.0	18.01	73.0	A-8	G
8190.100	EX	142 M/390, 2 - series - Pianale pia	-	300957	11.0	18.01	73.0	A-8	G
8189.100	IN	142 M/390, 2 - series - Pianale pia	-	300957	11.0	18.01	80.0	A-8	G
8189.100	IN	142 M/390, 2 - series - Trattore pe	-	1523410	11.0	18.01	80.0	A-8	G
8189.100	IN	142 M/390, 2 - series - Trattore pe	-	1523410	11.0	18.01	80.0	A-8	G
8190.100	EX	142 M/390, 2 - series - Trattore pe	-	1523410	11.0	18.01	73.0	A-8	G
8190.100	EX	142 M/390, 2 - series - Trattore pe	-	1523410	11.0	18.01	73.0	A-8	G
8189.100	IN	142 M/390, 2 - series - Trattore pe	-	300957	11.0	18.01	80.0	A-8	G
8189.100	IN	142 M/390, 2 - series - Trattore pe	-	300957	11.0	18.01	80.0	A-8	G
8190.100	EX	142 M/390, 2 - series - Trattore pe	-	300957	11.0	18.01	73.0	A-8	G

(D1) Internal diameter, (D2) External diameter, (B) Shape, (C) Material

VALVE GUIDES

IVT Ref.	Type	Model	Engine	OEM Ref.	D1	D2	Length	B	C
SCANIA									
8190.100	EX	142 M/390, 2 - series - Trattore pe	-	300957	11.0	18.01	73.0	A-8	G
8191.600	IN-EX	143 E/420, 3 - series - Cassone ri	-	1403823	10.0	16.01	73.0	F-8	G
8191.600	IN-EX	143 E/420, 3 - series - Cassone ri	-	1403823	10.0	16.01	73.0	F-8	G
8189.100	IN	143 E/420, 3 - series - Cassone ri	-	1523410	11.0	18.01	80.0	A-8	G
8190.100	EX	143 E/420, 3 - series - Cassone ri	-	1523410	11.0	18.01	73.0	A-8	G
8189.100	IN	143 E/420, 3 - series - Cassone ri	-	1523410	11.0	18.01	80.0	A-8	G
8190.100	EX	143 E/420, 3 - series - Cassone ri	-	1523410	11.0	18.01	73.0	A-8	G
8191.600	IN-EX	143 E/420, 3 - series - Cassone ri	-	1940008	10.0	16.01	73.0	F-8	G
8191.600	IN-EX	143 E/420, 3 - series - Cassone ri	-	1940008	10.0	16.01	73.0	F-8	G
8189.100	IN	143 E/420, 3 - series - Cassone ri	-	300957	11.0	18.01	80.0	A-8	G
8189.100	IN	143 E/420, 3 - series - Cassone ri	-	300957	11.0	18.01	80.0	A-8	G
8190.100	EX	143 E/420, 3 - series - Cassone ri	-	300957	11.0	18.01	73.0	A-8	G
8190.100	EX	143 E/420, 3 - series - Cassone ri	-	300957	11.0	18.01	73.0	A-8	G
8191.600	IN-EX	143 E/420, 3 - series - Pianale piat	-	1403823	10.0	16.01	73.0	F-8	G
8189.100	IN	143 E/420, 3 - series - Pianale piat	-	1523410	11.0	18.01	80.0	A-8	G
8190.100	EX	143 E/420, 3 - series - Pianale piat	-	1523410	11.0	18.01	73.0	A-8	G
8191.600	IN-EX	143 E/420, 3 - series - Pianale piat	-	1940008	10.0	16.01	73.0	F-8	G
8189.100	IN	143 E/420, 3 - series - Pianale piat	-	300957	11.0	18.01	80.0	A-8	G
8190.100	EX	143 E/420, 3 - series - Pianale piat	-	300957	11.0	18.01	73.0	A-8	G
8191.600	IN-EX	143 E/420, 3 - series - Trattore per	-	1403823	10.0	16.01	73.0	F-8	G
8189.100	IN	143 E/420, 3 - series - Trattore per	-	1523410	11.0	18.01	80.0	A-8	G
8190.100	EX	143 E/420, 3 - series - Trattore per	-	1523410	11.0	18.01	73.0	A-8	G
8191.600	IN-EX	143 E/420, 3 - series - Trattore per	-	1940008	10.0	16.01	73.0	F-8	G
8189.100	IN	143 E/420, 3 - series - Trattore per	-	300957	11.0	18.01	80.0	A-8	G
8190.100	EX	143 E/420, 3 - series - Trattore per	-	300957	11.0	18.01	73.0	A-8	G
8191.600	IN-EX	143 E/450, 3 - series - Cassone ri	-	1403823	10.0	16.01	73.0	F-8	G
8191.600	IN-EX	143 E/450, 3 - series - Cassone ri	-	1403823	10.0	16.01	73.0	F-8	G
8190.100	EX	143 E/450, 3 - series - Cassone ri	-	1523410	11.0	18.01	73.0	A-8	G
8189.100	IN	143 E/450, 3 - series - Cassone ri	-	1523410	11.0	18.01	80.0	A-8	G
8189.100	IN	143 E/450, 3 - series - Cassone ri	-	1523410	11.0	18.01	80.0	A-8	G
8190.100	EX	143 E/450, 3 - series - Cassone ri	-	1523410	11.0	18.01	73.0	A-8	G
8191.600	IN-EX	143 E/450, 3 - series - Cassone ri	-	1940008	10.0	16.01	73.0	F-8	G
8191.600	IN-EX	143 E/450, 3 - series - Cassone ri	-	1940008	10.0	16.01	73.0	F-8	G
8189.100	IN	143 E/450, 3 - series - Cassone ri	-	300957	11.0	18.01	80.0	A-8	G
8189.100	IN	143 E/450, 3 - series - Cassone ri	-	300957	11.0	18.01	80.0	A-8	G
8190.100	EX	143 E/450, 3 - series - Cassone ri	-	300957	11.0	18.01	73.0	A-8	G
8190.100	EX	143 E/450, 3 - series - Cassone ri	-	300957	11.0	18.01	73.0	A-8	G
8191.600	IN-EX	143 E/450, 3 - series - Pianale piat	-	1403823	10.0	16.01	73.0	F-8	G
8190.100	EX	143 E/450, 3 - series - Pianale piat	-	1523410	11.0	18.01	73.0	A-8	G
8189.100	IN	143 E/450, 3 - series - Pianale piat	-	1523410	11.0	18.01	80.0	A-8	G
8191.600	IN-EX	143 E/450, 3 - series - Pianale piat	-	1940008	10.0	16.01	73.0	F-8	G
8189.100	IN	143 E/450, 3 - series - Pianale piat	-	300957	11.0	18.01	80.0	A-8	G
8190.100	EX	143 E/450, 3 - series - Pianale piat	-	300957	11.0	18.01	73.0	A-8	G
8191.600	IN-EX	143 E/450, 3 - series - Trattore per	-	1403823	10.0	16.01	73.0	F-8	G
8189.100	IN	143 E/450, 3 - series - Trattore per	-	1523410	11.0	18.01	80.0	A-8	G
8190.100	EX	143 E/450, 3 - series - Trattore per	-	1523410	11.0	18.01	73.0	A-8	G
8191.600	IN-EX	143 E/450, 3 - series - Trattore per	-	1940008	10.0	16.01	73.0	F-8	G
8189.100	IN	143 E/450, 3 - series - Trattore per	-	300957	11.0	18.01	80.0	A-8	G
8190.100	EX	143 E/450, 3 - series - Trattore per	-	300957	11.0	18.01	73.0	A-8	G
8191.600	IN-EX	143 E/500, 3 - series - Cassone ri	-	1403823	10.0	16.01	73.0	F-8	G
8191.600	IN-EX	143 E/500, 3 - series - Cassone ri	-	1403823	10.0	16.01	73.0	F-8	G
8189.100	IN	143 E/500, 3 - series - Cassone ri	-	1523410	11.0	18.01	80.0	A-8	G
8190.100	EX	143 E/500, 3 - series - Cassone ri	-	1523410	11.0	18.01	73.0	A-8	G
8189.100	IN	143 E/500, 3 - series - Cassone ri	-	1523410	11.0	18.01	80.0	A-8	G
8190.100	EX	143 E/500, 3 - series - Cassone ri	-	1523410	11.0	18.01	73.0	A-8	G
8191.600	IN-EX	143 E/500, 3 - series - Cassone ri	-	1940008	10.0	16.01	73.0	F-8	G
8191.600	IN-EX	143 E/500, 3 - series - Cassone ri	-	1940008	10.0	16.01	73.0	F-8	G
8190.100	EX	143 E/500, 3 - series - Cassone ri	-	300957	11.0	18.01	73.0	A-8	G
8189.100	IN	143 E/500, 3 - series - Cassone ri	-	300957	11.0	18.01	80.0	A-8	G
8189.100	IN	143 E/500, 3 - series - Cassone ri	-	300957	11.0	18.01	80.0	A-8	G
8190.100	EX	143 E/500, 3 - series - Cassone ri	-	300957	11.0	18.01	73.0	A-8	G
8191.600	IN-EX	143 E/500, 3 - series - Pianale piat	-	1403823	10.0	16.01	73.0	F-8	G

(D1) Internal diameter, (D2) External diameter, (B) Shape, (C) Material

VALVE GUIDES

IVT Ref.	Type	Model	Engine	OEM Ref.	D1	D2	Length	B	C
SCANIA									
8190.100	EX	143 E/500, 3 - series - Pianale piat	-	1523410	11.0	18.01	73.0	A-8	G
8189.100	IN	143 E/500, 3 - series - Pianale piat	-	1523410	11.0	18.01	80.0	A-8	G
8191.600	IN-EX	143 E/500, 3 - series - Pianale piat	-	1940008	10.0	16.01	73.0	F-8	G
8190.100	EX	143 E/500, 3 - series - Pianale piat	-	300957	11.0	18.01	73.0	A-8	G
8189.100	IN	143 E/500, 3 - series - Pianale piat	-	300957	11.0	18.01	80.0	A-8	G
8191.600	IN-EX	143 E/500, 3 - series - Trattore per	-	1403823	10.0	16.01	73.0	F-8	G
8189.100	IN	143 E/500, 3 - series - Trattore per	-	1523410	11.0	18.01	80.0	A-8	G
8190.100	EX	143 E/500, 3 - series - Trattore per	-	1523410	11.0	18.01	73.0	A-8	G
8191.600	IN-EX	143 E/500, 3 - series - Trattore per	-	1940008	10.0	16.01	73.0	F-8	G
8189.100	IN	143 E/500, 3 - series - Trattore per	-	300957	11.0	18.01	80.0	A-8	G
8190.100	EX	143 E/500, 3 - series - Trattore per	-	300957	11.0	18.01	73.0	A-8	G
8191.600	IN-EX	143 H/400, 3 - series - Pianale piat	-	1403823	10.0	16.01	73.0	F-8	G
8191.600	IN-EX	143 H/400, 3 - series - Pianale piat	-	1403823	10.0	16.01	73.0	F-8	G
8191.600	IN-EX	143 H/400, 3 - series - Pianale piat	-	1403823	10.0	16.01	73.0	F-8	G
8191.600	IN-EX	143 H/400, 3 - series - Pianale piat	-	1403823	10.0	16.01	73.0	F-8	G
8191.600	IN-EX	143 H/400, 3 - series - Pianale piat	-	1403823	10.0	16.01	73.0	F-8	G
8191.600	IN-EX	143 H/400, 3 - series - Pianale piat	-	1403823	10.0	16.01	73.0	F-8	G
8190.100	EX	143 H/400, 3 - series - Pianale piat	-	1523410	11.0	18.01	73.0	A-8	G
8190.100	EX	143 H/400, 3 - series - Pianale piat	-	1523410	11.0	18.01	73.0	A-8	G
8189.100	IN	143 H/400, 3 - series - Pianale piat	-	1523410	11.0	18.01	80.0	A-8	G
8190.100	EX	143 H/400, 3 - series - Pianale piat	-	1523410	11.0	18.01	73.0	A-8	G
8189.100	IN	143 H/400, 3 - series - Pianale piat	-	1523410	11.0	18.01	80.0	A-8	G
8189.100	IN	143 H/400, 3 - series - Pianale piat	-	1523410	11.0	18.01	80.0	A-8	G
8189.100	IN	143 H/400, 3 - series - Pianale piat	-	1523410	11.0	18.01	80.0	A-8	G
8189.100	IN	143 H/400, 3 - series - Pianale piat	-	1523410	11.0	18.01	80.0	A-8	G
8190.100	EX	143 H/400, 3 - series - Pianale piat	-	1523410	11.0	18.01	73.0	A-8	G
8189.100	IN	143 H/400, 3 - series - Pianale piat	-	1523410	11.0	18.01	80.0	A-8	G
8190.100	EX	143 H/400, 3 - series - Pianale piat	-	1523410	11.0	18.01	73.0	A-8	G
8190.100	EX	143 H/400, 3 - series - Pianale piat	-	1523410	11.0	18.01	73.0	A-8	G
8191.600	IN-EX	143 H/400, 3 - series - Pianale piat	-	1940008	10.0	16.01	73.0	F-8	G
8191.600	IN-EX	143 H/400, 3 - series - Pianale piat	-	1940008	10.0	16.01	73.0	F-8	G
8191.600	IN-EX	143 H/400, 3 - series - Pianale piat	-	1940008	10.0	16.01	73.0	F-8	G
8191.600	IN-EX	143 H/400, 3 - series - Pianale piat	-	1940008	10.0	16.01	73.0	F-8	G
8191.600	IN-EX	143 H/400, 3 - series - Pianale piat	-	1940008	10.0	16.01	73.0	F-8	G
8191.600	IN-EX	143 H/400, 3 - series - Pianale piat	-	1940008	10.0	16.01	73.0	F-8	G
8189.100	IN	143 H/400, 3 - series - Pianale piat	-	300957	11.0	18.01	80.0	A-8	G
8190.100	EX	143 H/400, 3 - series - Pianale piat	-	300957	11.0	18.01	73.0	A-8	G
8190.100	EX	143 H/400, 3 - series - Pianale piat	-	300957	11.0	18.01	73.0	A-8	G
8190.100	EX	143 H/400, 3 - series - Pianale piat	-	300957	11.0	18.01	73.0	A-8	G
8190.100	EX	143 H/400, 3 - series - Pianale piat	-	300957	11.0	18.01	73.0	A-8	G
8190.100	EX	143 H/400, 3 - series - Pianale piat	-	300957	11.0	18.01	73.0	A-8	G
8189.100	IN	143 H/400, 3 - series - Pianale piat	-	300957	11.0	18.01	80.0	A-8	G
8189.100	IN	143 H/400, 3 - series - Pianale piat	-	300957	11.0	18.01	80.0	A-8	G
8189.100	IN	143 H/400, 3 - series - Pianale piat	-	300957	11.0	18.01	80.0	A-8	G
8189.100	IN	143 H/400, 3 - series - Pianale piat	-	300957	11.0	18.01	80.0	A-8	G
8189.100	IN	143 H/400, 3 - series - Pianale piat	-	300957	11.0	18.01	80.0	A-8	G
8190.100	EX	143 H/400, 3 - series - Pianale piat	-	300957	11.0	18.01	73.0	A-8	G
8191.600	IN-EX	143 H/400, 3 - series - Trattore per	-	1403823	10.0	16.01	73.0	F-8	G
8191.600	IN-EX	143 H/400, 3 - series - Trattore per	-	1403823	10.0	16.01	73.0	F-8	G
8191.600	IN-EX	143 H/400, 3 - series - Trattore per	-	1403823	10.0	16.01	73.0	F-8	G
8191.600	IN-EX	143 H/400, 3 - series - Trattore per	-	1403823	10.0	16.01	73.0	F-8	G
8191.600	IN-EX	143 H/400, 3 - series - Trattore per	-	1403823	10.0	16.01	73.0	F-8	G
8191.600	IN-EX	143 H/400, 3 - series - Trattore per	-	1403823	10.0	16.01	73.0	F-8	G
8190.100	EX	143 H/400, 3 - series - Trattore per	-	1523410	11.0	18.01	73.0	A-8	G
8190.100	EX	143 H/400, 3 - series - Trattore per	-	1523410	11.0	18.01	73.0	A-8	G
8189.100	IN	143 H/400, 3 - series - Trattore per	-	1523410	11.0	18.01	80.0	A-8	G
8190.100	EX	143 H/400, 3 - series - Trattore per	-	1523410	11.0	18.01	73.0	A-8	G
8190.100	EX	143 H/400, 3 - series - Trattore per	-	1523410	11.0	18.01	73.0	A-8	G
8190.100	EX	143 H/400, 3 - series - Trattore per	-	1523410	11.0	18.01	73.0	A-8	G
8189.100	IN	143 H/400, 3 - series - Trattore per	-	1523410	11.0	18.01	80.0	A-8	G
8190.100	EX	143 H/400, 3 - series - Trattore per	-	1523410	11.0	18.01	73.0	A-8	G
8189.100	IN	143 H/400, 3 - series - Trattore per	-	1523410	11.0	18.01	80.0	A-8	G

(D1) Internal diameter, (D2) External diameter, (B) Shape, (C) Material

VALVE GUIDES

IVT Ref.	Type	Model	Engine	OEM Ref.	D1	D2	Length	B	C
SCANIA									
8189.100	IN	143 H/400, 3 - series - Trattore per	-	1523410	11.0	18.01	80.0	A-8	G
8189.100	IN	143 H/400, 3 - series - Trattore per	-	1523410	11.0	18.01	80.0	A-8	G
8189.100	IN	143 H/400, 3 - series - Trattore per	-	1523410	11.0	18.01	80.0	A-8	G
8191.600	IN-EX	143 H/400, 3 - series - Trattore per	-	1940008	10.0	16.01	73.0	F-8	G
8191.600	IN-EX	143 H/400, 3 - series - Trattore per	-	1940008	10.0	16.01	73.0	F-8	G
8191.600	IN-EX	143 H/400, 3 - series - Trattore per	-	1940008	10.0	16.01	73.0	F-8	G
8191.600	IN-EX	143 H/400, 3 - series - Trattore per	-	1940008	10.0	16.01	73.0	F-8	G
8191.600	IN-EX	143 H/400, 3 - series - Trattore per	-	1940008	10.0	16.01	73.0	F-8	G
8191.600	IN-EX	143 H/400, 3 - series - Trattore per	-	1940008	10.0	16.01	73.0	F-8	G
8189.100	IN	143 H/400, 3 - series - Trattore per	-	300957	11.0	18.01	80.0	A-8	G
8190.100	EX	143 H/400, 3 - series - Trattore per	-	300957	11.0	18.01	73.0	A-8	G
8189.100	IN	143 H/400, 3 - series - Trattore per	-	300957	11.0	18.01	80.0	A-8	G
8190.100	EX	143 H/400, 3 - series - Trattore per	-	300957	11.0	18.01	73.0	A-8	G
8189.100	IN	143 H/400, 3 - series - Trattore per	-	300957	11.0	18.01	80.0	A-8	G
8190.100	EX	143 H/400, 3 - series - Trattore per	-	300957	11.0	18.01	73.0	A-8	G
8190.100	EX	143 H/400, 3 - series - Trattore per	-	300957	11.0	18.01	73.0	A-8	G
8189.100	IN	143 H/400, 3 - series - Trattore per	-	300957	11.0	18.01	80.0	A-8	G
8189.100	IN	143 H/400, 3 - series - Trattore per	-	300957	11.0	18.01	80.0	A-8	G
8190.100	EX	143 H/400, 3 - series - Trattore per	-	300957	11.0	18.01	73.0	A-8	G
8190.100	EX	143 H/400, 3 - series - Trattore per	-	300957	11.0	18.01	73.0	A-8	G
8189.100	IN	143 H/400, 3 - series - Trattore per	-	300957	11.0	18.01	80.0	A-8	G
8191.600	IN-EX	143 H/420, 3 - series - Cassone ri	-	1403823	10.0	16.01	73.0	F-8	G
8190.100	EX	143 H/420, 3 - series - Cassone ri	-	1523410	11.0	18.01	73.0	A-8	G
8189.100	IN	143 H/420, 3 - series - Cassone ri	-	1523410	11.0	18.01	80.0	A-8	G
8191.600	IN-EX	143 H/420, 3 - series - Cassone ri	-	1940008	10.0	16.01	73.0	F-8	G
8189.100	IN	143 H/420, 3 - series - Cassone ri	-	300957	11.0	18.01	80.0	A-8	G
8190.100	EX	143 H/420, 3 - series - Cassone ri	-	300957	11.0	18.01	73.0	A-8	G
8191.600	IN-EX	143 H/420, 3 - series - Pianale piat	-	1403823	10.0	16.01	73.0	F-8	G
8191.600	IN-EX	143 H/420, 3 - series - Pianale piat	-	1403823	10.0	16.01	73.0	F-8	G
8191.600	IN-EX	143 H/420, 3 - series - Pianale piat	-	1403823	10.0	16.01	73.0	F-8	G
8190.100	EX	143 H/420, 3 - series - Pianale piat	-	1523410	11.0	18.01	73.0	A-8	G
8190.100	EX	143 H/420, 3 - series - Pianale piat	-	1523410	11.0	18.01	73.0	A-8	G
8190.100	EX	143 H/420, 3 - series - Pianale piat	-	1523410	11.0	18.01	73.0	A-8	G
8189.100	IN	143 H/420, 3 - series - Pianale piat	-	1523410	11.0	18.01	80.0	A-8	G
8189.100	IN	143 H/420, 3 - series - Pianale piat	-	1523410	11.0	18.01	80.0	A-8	G
8189.100	IN	143 H/420, 3 - series - Pianale piat	-	1523410	11.0	18.01	80.0	A-8	G
8191.600	IN-EX	143 H/420, 3 - series - Pianale piat	-	1940008	10.0	16.01	73.0	F-8	G
8191.600	IN-EX	143 H/420, 3 - series - Pianale piat	-	1940008	10.0	16.01	73.0	F-8	G
8191.600	IN-EX	143 H/420, 3 - series - Pianale piat	-	1940008	10.0	16.01	73.0	F-8	G
8189.100	IN	143 H/420, 3 - series - Pianale piat	-	300957	11.0	18.01	80.0	A-8	G
8190.100	EX	143 H/420, 3 - series - Pianale piat	-	300957	11.0	18.01	73.0	A-8	G
8190.100	EX	143 H/420, 3 - series - Pianale piat	-	300957	11.0	18.01	73.0	A-8	G
8190.100	EX	143 H/420, 3 - series - Pianale piat	-	300957	11.0	18.01	73.0	A-8	G
8189.100	IN	143 H/420, 3 - series - Pianale piat	-	300957	11.0	18.01	80.0	A-8	G
8189.100	IN	143 H/420, 3 - series - Pianale piat	-	300957	11.0	18.01	80.0	A-8	G
8191.600	IN-EX	143 H/420, 3 - series - Trattore per	-	1403823	10.0	16.01	73.0	F-8	G
8191.600	IN-EX	143 H/420, 3 - series - Trattore per	-	1403823	10.0	16.01	73.0	F-8	G
8191.600	IN-EX	143 H/420, 3 - series - Trattore per	-	1403823	10.0	16.01	73.0	F-8	G
8190.100	EX	143 H/420, 3 - series - Trattore per	-	1523410	11.0	18.01	73.0	A-8	G
8190.100	EX	143 H/420, 3 - series - Trattore per	-	1523410	11.0	18.01	73.0	A-8	G
8190.100	EX	143 H/420, 3 - series - Trattore per	-	1523410	11.0	18.01	73.0	A-8	G
8189.100	IN	143 H/420, 3 - series - Trattore per	-	1523410	11.0	18.01	80.0	A-8	G
8189.100	IN	143 H/420, 3 - series - Trattore per	-	1523410	11.0	18.01	80.0	A-8	G
8189.100	IN	143 H/420, 3 - series - Trattore per	-	1523410	11.0	18.01	80.0	A-8	G
8191.600	IN-EX	143 H/420, 3 - series - Trattore per	-	1940008	10.0	16.01	73.0	F-8	G
8191.600	IN-EX	143 H/420, 3 - series - Trattore per	-	1940008	10.0	16.01	73.0	F-8	G
8191.600	IN-EX	143 H/420, 3 - series - Trattore per	-	1940008	10.0	16.01	73.0	F-8	G
8190.100	EX	143 H/420, 3 - series - Trattore per	-	300957	11.0	18.01	73.0	A-8	G
8190.100	EX	143 H/420, 3 - series - Trattore per	-	300957	11.0	18.01	73.0	A-8	G
8189.100	IN	143 H/420, 3 - series - Trattore per	-	300957	11.0	18.01	80.0	A-8	G
8189.100	IN	143 H/420, 3 - series - Trattore per	-	300957	11.0	18.01	80.0	A-8	G
8189.100	IN	143 H/420, 3 - series - Trattore per	-	300957	11.0	18.01	80.0	A-8	G

(D1) Internal diameter, (D2) External diameter, (B) Shape, (C) Material

VALVE GUIDES

IVT Ref.	Type	Model	Engine	OEM Ref.	D1	D2	Length	B	C
SCANIA									
8190.100	EX	143 H/420, 3 - series - Trattore per	-	300957	11.0	18.01	73.0	A-8	G
8191.600	IN-EX	143 H/450, 3 - series - Pianale piat	-	1403823	10.0	16.01	73.0	F-8	G
8191.600	IN-EX	143 H/450, 3 - series - Pianale piat	-	1403823	10.0	16.01	73.0	F-8	G
8191.600	IN-EX	143 H/450, 3 - series - Pianale piat	-	1403823	10.0	16.01	73.0	F-8	G
8191.600	IN-EX	143 H/450, 3 - series - Pianale piat	-	1403823	10.0	16.01	73.0	F-8	G
8191.600	IN-EX	143 H/450, 3 - series - Pianale piat	-	1403823	10.0	16.01	73.0	F-8	G
8191.600	IN-EX	143 H/450, 3 - series - Pianale piat	-	1403823	10.0	16.01	73.0	F-8	G
8189.100	IN	143 H/450, 3 - series - Pianale piat	-	1523410	11.0	18.01	80.0	A-8	G
8189.100	IN	143 H/450, 3 - series - Pianale piat	-	1523410	11.0	18.01	80.0	A-8	G
8189.100	IN	143 H/450, 3 - series - Pianale piat	-	1523410	11.0	18.01	80.0	A-8	G
8189.100	IN	143 H/450, 3 - series - Pianale piat	-	1523410	11.0	18.01	80.0	A-8	G
8190.100	EX	143 H/450, 3 - series - Pianale piat	-	1523410	11.0	18.01	73.0	A-8	G
8189.100	IN	143 H/450, 3 - series - Pianale piat	-	1523410	11.0	18.01	80.0	A-8	G
8190.100	EX	143 H/450, 3 - series - Pianale piat	-	1523410	11.0	18.01	73.0	A-8	G
8190.100	EX	143 H/450, 3 - series - Pianale piat	-	1523410	11.0	18.01	73.0	A-8	G
8190.100	EX	143 H/450, 3 - series - Pianale piat	-	1523410	11.0	18.01	73.0	A-8	G
8190.100	EX	143 H/450, 3 - series - Pianale piat	-	1523410	11.0	18.01	73.0	A-8	G
8190.100	EX	143 H/450, 3 - series - Pianale piat	-	1523410	11.0	18.01	73.0	A-8	G
8189.100	IN	143 H/450, 3 - series - Pianale piat	-	1523410	11.0	18.01	80.0	A-8	G
8191.600	IN-EX	143 H/450, 3 - series - Pianale piat	-	1940008	10.0	16.01	73.0	F-8	G
8191.600	IN-EX	143 H/450, 3 - series - Pianale piat	-	1940008	10.0	16.01	73.0	F-8	G
8191.600	IN-EX	143 H/450, 3 - series - Pianale piat	-	1940008	10.0	16.01	73.0	F-8	G
8191.600	IN-EX	143 H/450, 3 - series - Pianale piat	-	1940008	10.0	16.01	73.0	F-8	G
8191.600	IN-EX	143 H/450, 3 - series - Pianale piat	-	1940008	10.0	16.01	73.0	F-8	G
8191.600	IN-EX	143 H/450, 3 - series - Pianale piat	-	1940008	10.0	16.01	73.0	F-8	G
8189.100	IN	143 H/450, 3 - series - Pianale piat	-	300957	11.0	18.01	80.0	A-8	G
8189.100	IN	143 H/450, 3 - series - Pianale piat	-	300957	11.0	18.01	80.0	A-8	G
8189.100	IN	143 H/450, 3 - series - Pianale piat	-	300957	11.0	18.01	80.0	A-8	G
8189.100	IN	143 H/450, 3 - series - Pianale piat	-	300957	11.0	18.01	80.0	A-8	G
8189.100	IN	143 H/450, 3 - series - Pianale piat	-	300957	11.0	18.01	80.0	A-8	G
8190.100	EX	143 H/450, 3 - series - Pianale piat	-	300957	11.0	18.01	73.0	A-8	G
8190.100	EX	143 H/450, 3 - series - Pianale piat	-	300957	11.0	18.01	73.0	A-8	G
8189.100	IN	143 H/450, 3 - series - Pianale piat	-	300957	11.0	18.01	80.0	A-8	G
8190.100	EX	143 H/450, 3 - series - Pianale piat	-	300957	11.0	18.01	73.0	A-8	G
8190.100	EX	143 H/450, 3 - series - Pianale piat	-	300957	11.0	18.01	73.0	A-8	G
8190.100	EX	143 H/450, 3 - series - Pianale piat	-	300957	11.0	18.01	73.0	A-8	G
8190.100	EX	143 H/450, 3 - series - Pianale piat	-	300957	11.0	18.01	73.0	A-8	G
8191.600	IN-EX	143 H/450, 3 - series - Trattore per	-	1403823	10.0	16.01	73.0	F-8	G
8191.600	IN-EX	143 H/450, 3 - series - Trattore per	-	1403823	10.0	16.01	73.0	F-8	G
8191.600	IN-EX	143 H/450, 3 - series - Trattore per	-	1403823	10.0	16.01	73.0	F-8	G
8191.600	IN-EX	143 H/450, 3 - series - Trattore per	-	1403823	10.0	16.01	73.0	F-8	G
8191.600	IN-EX	143 H/450, 3 - series - Trattore per	-	1403823	10.0	16.01	73.0	F-8	G
8191.600	IN-EX	143 H/450, 3 - series - Trattore per	-	1403823	10.0	16.01	73.0	F-8	G
8190.100	EX	143 H/450, 3 - series - Trattore per	-	1523410	11.0	18.01	73.0	A-8	G
8190.100	EX	143 H/450, 3 - series - Trattore per	-	1523410	11.0	18.01	73.0	A-8	G
8190.100	EX	143 H/450, 3 - series - Trattore per	-	1523410	11.0	18.01	73.0	A-8	G
8190.100	EX	143 H/450, 3 - series - Trattore per	-	1523410	11.0	18.01	73.0	A-8	G
8190.100	EX	143 H/450, 3 - series - Trattore per	-	1523410	11.0	18.01	73.0	A-8	G
8189.100	IN	143 H/450, 3 - series - Trattore per	-	1523410	11.0	18.01	80.0	A-8	G
8189.100	IN	143 H/450, 3 - series - Trattore per	-	1523410	11.0	18.01	80.0	A-8	G
8189.100	IN	143 H/450, 3 - series - Trattore per	-	1523410	11.0	18.01	80.0	A-8	G
8189.100	IN	143 H/450, 3 - series - Trattore per	-	1523410	11.0	18.01	80.0	A-8	G
8189.100	IN	143 H/450, 3 - series - Trattore per	-	1523410	11.0	18.01	80.0	A-8	G
8189.100	IN	143 H/450, 3 - series - Trattore per	-	1523410	11.0	18.01	80.0	A-8	G
8190.100	EX	143 H/450, 3 - series - Trattore per	-	1523410	11.0	18.01	73.0	A-8	G
8191.600	IN-EX	143 H/450, 3 - series - Trattore per	-	1940008	10.0	16.01	73.0	F-8	G
8191.600	IN-EX	143 H/450, 3 - series - Trattore per	-	1940008	10.0	16.01	73.0	F-8	G
8191.600	IN-EX	143 H/450, 3 - series - Trattore per	-	1940008	10.0	16.01	73.0	F-8	G
8191.600	IN-EX	143 H/450, 3 - series - Trattore per	-	1940008	10.0	16.01	73.0	F-8	G
8191.600	IN-EX	143 H/450, 3 - series - Trattore per	-	1940008	10.0	16.01	73.0	F-8	G
8191.600	IN-EX	143 H/450, 3 - series - Trattore per	-	1940008	10.0	16.01	73.0	F-8	G
8189.100	IN	143 H/450, 3 - series - Trattore per	-	300957	11.0	18.01	80.0	A-8	G

(D1) Internal diameter, (D2) External diameter, (B) Shape, (C) Material

VALVE GUIDES

IVT Ref.	Type	Model	Engine	OEM Ref.	D1	D2	Length	B	C
SCANIA									
8190.100	EX	143 H/450, 3 - series - Trattore per	-	300957	11.0	18.01	73.0	A-8	G
8189.100	IN	143 H/450, 3 - series - Trattore per	-	300957	11.0	18.01	80.0	A-8	G
8189.100	IN	143 H/450, 3 - series - Trattore per	-	300957	11.0	18.01	80.0	A-8	G
8189.100	IN	143 H/450, 3 - series - Trattore per	-	300957	11.0	18.01	80.0	A-8	G
8189.100	IN	143 H/450, 3 - series - Trattore per	-	300957	11.0	18.01	80.0	A-8	G
8190.100	EX	143 H/450, 3 - series - Trattore per	-	300957	11.0	18.01	73.0	A-8	G
8189.100	IN	143 H/450, 3 - series - Trattore per	-	300957	11.0	18.01	80.0	A-8	G
8190.100	EX	143 H/450, 3 - series - Trattore per	-	300957	11.0	18.01	73.0	A-8	G
8190.100	EX	143 H/450, 3 - series - Trattore per	-	300957	11.0	18.01	73.0	A-8	G
8190.100	EX	143 H/450, 3 - series - Trattore per	-	300957	11.0	18.01	73.0	A-8	G
8190.100	EX	143 H/450, 3 - series - Trattore per	-	300957	11.0	18.01	73.0	A-8	G
8191.600	IN-EX	143 H/470, 3 - series - Pianale piat	-	1403823	10.0	16.01	73.0	F-8	G
8191.600	IN-EX	143 H/470, 3 - series - Pianale piat	-	1403823	10.0	16.01	73.0	F-8	G
8191.600	IN-EX	143 H/470, 3 - series - Pianale piat	-	1403823	10.0	16.01	73.0	F-8	G
8191.600	IN-EX	143 H/470, 3 - series - Pianale piat	-	1403823	10.0	16.01	73.0	F-8	G
8191.600	IN-EX	143 H/470, 3 - series - Pianale piat	-	1403823	10.0	16.01	73.0	F-8	G
8191.600	IN-EX	143 H/470, 3 - series - Pianale piat	-	1403823	10.0	16.01	73.0	F-8	G
8190.100	EX	143 H/470, 3 - series - Pianale piat	-	1523410	11.0	18.01	73.0	A-8	G
8190.100	EX	143 H/470, 3 - series - Pianale piat	-	1523410	11.0	18.01	73.0	A-8	G
8190.100	EX	143 H/470, 3 - series - Pianale piat	-	1523410	11.0	18.01	73.0	A-8	G
8190.100	EX	143 H/470, 3 - series - Pianale piat	-	1523410	11.0	18.01	73.0	A-8	G
8189.100	IN	143 H/470, 3 - series - Pianale piat	-	1523410	11.0	18.01	80.0	A-8	G
8189.100	IN	143 H/470, 3 - series - Pianale piat	-	1523410	11.0	18.01	80.0	A-8	G
8189.100	IN	143 H/470, 3 - series - Pianale piat	-	1523410	11.0	18.01	80.0	A-8	G
8189.100	IN	143 H/470, 3 - series - Pianale piat	-	1523410	11.0	18.01	80.0	A-8	G
8189.100	IN	143 H/470, 3 - series - Pianale piat	-	1523410	11.0	18.01	80.0	A-8	G
8190.100	EX	143 H/470, 3 - series - Pianale piat	-	1523410	11.0	18.01	73.0	A-8	G
8191.600	IN-EX	143 H/470, 3 - series - Pianale piat	-	1940008	10.0	16.01	73.0	F-8	G
8191.600	IN-EX	143 H/470, 3 - series - Pianale piat	-	1940008	10.0	16.01	73.0	F-8	G
8191.600	IN-EX	143 H/470, 3 - series - Pianale piat	-	1940008	10.0	16.01	73.0	F-8	G
8191.600	IN-EX	143 H/470, 3 - series - Pianale piat	-	1940008	10.0	16.01	73.0	F-8	G
8191.600	IN-EX	143 H/470, 3 - series - Pianale piat	-	1940008	10.0	16.01	73.0	F-8	G
8191.600	IN-EX	143 H/470, 3 - series - Pianale piat	-	1940008	10.0	16.01	73.0	F-8	G
8190.100	EX	143 H/470, 3 - series - Pianale piat	-	300957	11.0	18.01	73.0	A-8	G
8190.100	EX	143 H/470, 3 - series - Pianale piat	-	300957	11.0	18.01	73.0	A-8	G
8190.100	EX	143 H/470, 3 - series - Pianale piat	-	300957	11.0	18.01	73.0	A-8	G
8190.100	EX	143 H/470, 3 - series - Pianale piat	-	300957	11.0	18.01	73.0	A-8	G
8189.100	IN	143 H/470, 3 - series - Pianale piat	-	300957	11.0	18.01	80.0	A-8	G
8189.100	IN	143 H/470, 3 - series - Pianale piat	-	300957	11.0	18.01	80.0	A-8	G
8189.100	IN	143 H/470, 3 - series - Pianale piat	-	300957	11.0	18.01	80.0	A-8	G
8189.100	IN	143 H/470, 3 - series - Pianale piat	-	300957	11.0	18.01	80.0	A-8	G
8189.100	IN	143 H/470, 3 - series - Pianale piat	-	300957	11.0	18.01	80.0	A-8	G
8190.100	EX	143 H/470, 3 - series - Pianale piat	-	300957	11.0	18.01	73.0	A-8	G
8191.600	IN-EX	143 H/470, 3 - series - Trattore per	-	1403823	10.0	16.01	73.0	F-8	G
8191.600	IN-EX	143 H/470, 3 - series - Trattore per	-	1403823	10.0	16.01	73.0	F-8	G
8191.600	IN-EX	143 H/470, 3 - series - Trattore per	-	1403823	10.0	16.01	73.0	F-8	G
8191.600	IN-EX	143 H/470, 3 - series - Trattore per	-	1403823	10.0	16.01	73.0	F-8	G
8190.100	EX	143 H/470, 3 - series - Trattore per	-	1523410	11.0	18.01	73.0	A-8	G
8190.100	EX	143 H/470, 3 - series - Trattore per	-	1523410	11.0	18.01	73.0	A-8	G
8190.100	EX	143 H/470, 3 - series - Trattore per	-	1523410	11.0	18.01	73.0	A-8	G
8190.100	EX	143 H/470, 3 - series - Trattore per	-	1523410	11.0	18.01	73.0	A-8	G
8189.100	IN	143 H/470, 3 - series - Trattore per	-	1523410	11.0	18.01	80.0	A-8	G
8189.100	IN	143 H/470, 3 - series - Trattore per	-	1523410	11.0	18.01	80.0	A-8	G
8189.100	IN	143 H/470, 3 - series - Trattore per	-	1523410	11.0	18.01	80.0	A-8	G
8189.100	IN	143 H/470, 3 - series - Trattore per	-	1523410	11.0	18.01	80.0	A-8	G
8191.600	IN-EX	143 H/470, 3 - series - Trattore per	-	1940008	10.0	16.01	73.0	F-8	G
8191.600	IN-EX	143 H/470, 3 - series - Trattore per	-	1940008	10.0	16.01	73.0	F-8	G
8191.600	IN-EX	143 H/470, 3 - series - Trattore per	-	1940008	10.0	16.01	73.0	F-8	G
8191.600	IN-EX	143 H/470, 3 - series - Trattore per	-	1940008	10.0	16.01	73.0	F-8	G
8189.100	IN	143 H/470, 3 - series - Trattore per	-	300957	11.0	18.01	80.0	A-8	G
8190.100	EX	143 H/470, 3 - series - Trattore per	-	300957	11.0	18.01	73.0	A-8	G
8189.100	IN	143 H/470, 3 - series - Trattore per	-	300957	11.0	18.01	80.0	A-8	G

(D1) Internal diameter, (D2) External diameter, (B) Shape, (C) Material

VALVE GUIDES

IVT Ref.	Type	Model	Engine	OEM Ref.	D1	D2	Length	B	C
SCANIA									
8190.100	EX	143 H/470, 3 - series - Trattore per	-	300957	11.0	18.01	73.0	A-8	G
8190.100	EX	143 H/470, 3 - series - Trattore per	-	300957	11.0	18.01	73.0	A-8	G
8189.100	IN	143 H/470, 3 - series - Trattore per	-	300957	11.0	18.01	80.0	A-8	G
8189.100	IN	143 H/470, 3 - series - Trattore per	-	300957	11.0	18.01	80.0	A-8	G
8190.100	EX	143 H/470, 3 - series - Trattore per	-	300957	11.0	18.01	73.0	A-8	G
8191.600	IN-EX	143 H/500, 3 - series - Pianale piat	-	1403823	10.0	16.01	73.0	F-8	G
8191.600	IN-EX	143 H/500, 3 - series - Pianale piat	-	1403823	10.0	16.01	73.0	F-8	G
8191.600	IN-EX	143 H/500, 3 - series - Pianale piat	-	1403823	10.0	16.01	73.0	F-8	G
8190.100	EX	143 H/500, 3 - series - Pianale piat	-	1523410	11.0	18.01	73.0	A-8	G
8190.100	EX	143 H/500, 3 - series - Pianale piat	-	1523410	11.0	18.01	73.0	A-8	G
8190.100	EX	143 H/500, 3 - series - Pianale piat	-	1523410	11.0	18.01	73.0	A-8	G
8189.100	IN	143 H/500, 3 - series - Pianale piat	-	1523410	11.0	18.01	80.0	A-8	G
8189.100	IN	143 H/500, 3 - series - Pianale piat	-	1523410	11.0	18.01	80.0	A-8	G
8189.100	IN	143 H/500, 3 - series - Pianale piat	-	1523410	11.0	18.01	80.0	A-8	G
8191.600	IN-EX	143 H/500, 3 - series - Pianale piat	-	1940008	10.0	16.01	73.0	F-8	G
8191.600	IN-EX	143 H/500, 3 - series - Pianale piat	-	1940008	10.0	16.01	73.0	F-8	G
8191.600	IN-EX	143 H/500, 3 - series - Pianale piat	-	1940008	10.0	16.01	73.0	F-8	G
8189.100	IN	143 H/500, 3 - series - Pianale piat	-	300957	11.0	18.01	80.0	A-8	G
8190.100	EX	143 H/500, 3 - series - Pianale piat	-	300957	11.0	18.01	73.0	A-8	G
8190.100	EX	143 H/500, 3 - series - Pianale piat	-	300957	11.0	18.01	73.0	A-8	G
8189.100	IN	143 H/500, 3 - series - Pianale piat	-	300957	11.0	18.01	80.0	A-8	G
8189.100	IN	143 H/500, 3 - series - Pianale piat	-	300957	11.0	18.01	80.0	A-8	G
8190.100	EX	143 H/500, 3 - series - Pianale piat	-	300957	11.0	18.01	73.0	A-8	G
8191.600	IN-EX	143 H/500, 3 - series - Trattore per	-	1403823	10.0	16.01	73.0	F-8	G
8191.600	IN-EX	143 H/500, 3 - series - Trattore per	-	1403823	10.0	16.01	73.0	F-8	G
8191.600	IN-EX	143 H/500, 3 - series - Trattore per	-	1403823	10.0	16.01	73.0	F-8	G
8190.100	EX	143 H/500, 3 - series - Trattore per	-	1523410	11.0	18.01	73.0	A-8	G
8190.100	EX	143 H/500, 3 - series - Trattore per	-	1523410	11.0	18.01	73.0	A-8	G
8190.100	EX	143 H/500, 3 - series - Trattore per	-	1523410	11.0	18.01	73.0	A-8	G
8189.100	IN	143 H/500, 3 - series - Trattore per	-	1523410	11.0	18.01	80.0	A-8	G
8189.100	IN	143 H/500, 3 - series - Trattore per	-	1523410	11.0	18.01	80.0	A-8	G
8189.100	IN	143 H/500, 3 - series - Trattore per	-	1523410	11.0	18.01	80.0	A-8	G
8191.600	IN-EX	143 H/500, 3 - series - Trattore per	-	1940008	10.0	16.01	73.0	F-8	G
8191.600	IN-EX	143 H/500, 3 - series - Trattore per	-	1940008	10.0	16.01	73.0	F-8	G
8191.600	IN-EX	143 H/500, 3 - series - Trattore per	-	1940008	10.0	16.01	73.0	F-8	G
8190.100	EX	143 H/500, 3 - series - Trattore per	-	300957	11.0	18.01	73.0	A-8	G
8189.100	IN	143 H/500, 3 - series - Trattore per	-	300957	11.0	18.01	80.0	A-8	G
8190.100	EX	143 H/500, 3 - series - Trattore per	-	300957	11.0	18.01	73.0	A-8	G
8189.100	IN	143 H/500, 3 - series - Trattore per	-	300957	11.0	18.01	80.0	A-8	G
8190.100	EX	143 H/500, 3 - series - Trattore per	-	300957	11.0	18.01	73.0	A-8	G
8189.100	IN	143 H/500, 3 - series - Trattore per	-	300957	11.0	18.01	80.0	A-8	G
8191.600	IN-EX	143 M/420, 3 - series - Pianale pia	-	1403823	10.0	16.01	73.0	F-8	G
8191.600	IN-EX	143 M/420, 3 - series - Pianale pia	-	1403823	10.0	16.01	73.0	F-8	G
8190.100	EX	143 M/420, 3 - series - Pianale pia	-	1523410	11.0	18.01	73.0	A-8	G
8190.100	EX	143 M/420, 3 - series - Pianale pia	-	1523410	11.0	18.01	73.0	A-8	G
8189.100	IN	143 M/420, 3 - series - Pianale pia	-	1523410	11.0	18.01	80.0	A-8	G
8189.100	IN	143 M/420, 3 - series - Pianale pia	-	1523410	11.0	18.01	80.0	A-8	G
8191.600	IN-EX	143 M/420, 3 - series - Pianale pia	-	1940008	10.0	16.01	73.0	F-8	G
8191.600	IN-EX	143 M/420, 3 - series - Pianale pia	-	1940008	10.0	16.01	73.0	F-8	G
8190.100	EX	143 M/420, 3 - series - Pianale pia	-	300957	11.0	18.01	73.0	A-8	G
8190.100	EX	143 M/420, 3 - series - Pianale pia	-	300957	11.0	18.01	73.0	A-8	G
8189.100	IN	143 M/420, 3 - series - Pianale pia	-	300957	11.0	18.01	80.0	A-8	G
8189.100	IN	143 M/420, 3 - series - Pianale pia	-	300957	11.0	18.01	80.0	A-8	G
8191.600	IN-EX	143 M/420, 3 - series - Trattore pe	-	1403823	10.0	16.01	73.0	F-8	G
8191.600	IN-EX	143 M/420, 3 - series - Trattore pe	-	1403823	10.0	16.01	73.0	F-8	G
8190.100	EX	143 M/420, 3 - series - Trattore pe	-	1523410	11.0	18.01	73.0	A-8	G
8189.100	IN	143 M/420, 3 - series - Trattore pe	-	1523410	11.0	18.01	80.0	A-8	G
8190.100	EX	143 M/420, 3 - series - Trattore pe	-	1523410	11.0	18.01	73.0	A-8	G
8189.100	IN	143 M/420, 3 - series - Trattore pe	-	1523410	11.0	18.01	80.0	A-8	G
8191.600	IN-EX	143 M/420, 3 - series - Trattore pe	-	1940008	10.0	16.01	73.0	F-8	G
8191.600	IN-EX	143 M/420, 3 - series - Trattore pe	-	1940008	10.0	16.01	73.0	F-8	G
8190.100	EX	143 M/420, 3 - series - Trattore pe	-	300957	11.0	18.01	73.0	A-8	G

(D1) Internal diameter, (D2) External diameter, (B) Shape, (C) Material

VALVE GUIDES

IVT Ref.	Type	Model	Engine	OEM Ref.	D1	D2	Length	B	C
SCANIA									
8190.100	EX	143 M/420, 3 - series - Trattore pe	-	300957	11.0	18.01	73.0	A-8	G
8189.100	IN	143 M/420, 3 - series - Trattore pe	-	300957	11.0	18.01	80.0	A-8	G
8189.100	IN	143 M/420, 3 - series - Trattore pe	-	300957	11.0	18.01	80.0	A-8	G
8191.600	IN-EX	143 M/450, 3 - series - Pianale pia	-	1403823	10.0	16.01	73.0	F-8	G
8191.600	IN-EX	143 M/450, 3 - series - Pianale pia	-	1403823	10.0	16.01	73.0	F-8	G
8191.600	IN-EX	143 M/450, 3 - series - Pianale pia	-	1403823	10.0	16.01	73.0	F-8	G
8191.600	IN-EX	143 M/450, 3 - series - Pianale pia	-	1403823	10.0	16.01	73.0	F-8	G
8190.100	EX	143 M/450, 3 - series - Pianale pia	-	1523410	11.0	18.01	73.0	A-8	G
8189.100	IN	143 M/450, 3 - series - Pianale pia	-	1523410	11.0	18.01	80.0	A-8	G
8190.100	EX	143 M/450, 3 - series - Pianale pia	-	1523410	11.0	18.01	73.0	A-8	G
8190.100	EX	143 M/450, 3 - series - Pianale pia	-	1523410	11.0	18.01	73.0	A-8	G
8190.100	EX	143 M/450, 3 - series - Pianale pia	-	1523410	11.0	18.01	73.0	A-8	G
8189.100	IN	143 M/450, 3 - series - Pianale pia	-	1523410	11.0	18.01	80.0	A-8	G
8189.100	IN	143 M/450, 3 - series - Pianale pia	-	1523410	11.0	18.01	80.0	A-8	G
8189.100	IN	143 M/450, 3 - series - Pianale pia	-	1523410	11.0	18.01	80.0	A-8	G
8191.600	IN-EX	143 M/450, 3 - series - Pianale pia	-	1940008	10.0	16.01	73.0	F-8	G
8191.600	IN-EX	143 M/450, 3 - series - Pianale pia	-	1940008	10.0	16.01	73.0	F-8	G
8191.600	IN-EX	143 M/450, 3 - series - Pianale pia	-	1940008	10.0	16.01	73.0	F-8	G
8191.600	IN-EX	143 M/450, 3 - series - Pianale pia	-	1940008	10.0	16.01	73.0	F-8	G
8190.100	EX	143 M/450, 3 - series - Pianale pia	-	300957	11.0	18.01	73.0	A-8	G
8190.100	EX	143 M/450, 3 - series - Pianale pia	-	300957	11.0	18.01	73.0	A-8	G
8190.100	EX	143 M/450, 3 - series - Pianale pia	-	300957	11.0	18.01	73.0	A-8	G
8189.100	IN	143 M/450, 3 - series - Pianale pia	-	300957	11.0	18.01	80.0	A-8	G
8190.100	EX	143 M/450, 3 - series - Pianale pia	-	300957	11.0	18.01	73.0	A-8	G
8189.100	IN	143 M/450, 3 - series - Pianale pia	-	300957	11.0	18.01	80.0	A-8	G
8189.100	IN	143 M/450, 3 - series - Pianale pia	-	300957	11.0	18.01	80.0	A-8	G
8189.100	IN	143 M/450, 3 - series - Pianale pia	-	300957	11.0	18.01	80.0	A-8	G
8191.600	IN-EX	143 M/450, 3 - series - Trattore pe	-	1403823	10.0	16.01	73.0	F-8	G
8191.600	IN-EX	143 M/450, 3 - series - Trattore pe	-	1403823	10.0	16.01	73.0	F-8	G
8191.600	IN-EX	143 M/450, 3 - series - Trattore pe	-	1403823	10.0	16.01	73.0	F-8	G
8191.600	IN-EX	143 M/450, 3 - series - Trattore pe	-	1403823	10.0	16.01	73.0	F-8	G
8190.100	EX	143 M/450, 3 - series - Trattore pe	-	1523410	11.0	18.01	73.0	A-8	G
8190.100	EX	143 M/450, 3 - series - Trattore pe	-	1523410	11.0	18.01	73.0	A-8	G
8190.100	EX	143 M/450, 3 - series - Trattore pe	-	1523410	11.0	18.01	73.0	A-8	G
8190.100	EX	143 M/450, 3 - series - Trattore pe	-	1523410	11.0	18.01	73.0	A-8	G
8189.100	IN	143 M/450, 3 - series - Trattore pe	-	1523410	11.0	18.01	80.0	A-8	G
8189.100	IN	143 M/450, 3 - series - Trattore pe	-	1523410	11.0	18.01	80.0	A-8	G
8189.100	IN	143 M/450, 3 - series - Trattore pe	-	1523410	11.0	18.01	80.0	A-8	G
8189.100	IN	143 M/450, 3 - series - Trattore pe	-	1523410	11.0	18.01	80.0	A-8	G
8191.600	IN-EX	143 M/450, 3 - series - Trattore pe	-	1940008	10.0	16.01	73.0	F-8	G
8191.600	IN-EX	143 M/450, 3 - series - Trattore pe	-	1940008	10.0	16.01	73.0	F-8	G
8191.600	IN-EX	143 M/450, 3 - series - Trattore pe	-	1940008	10.0	16.01	73.0	F-8	G
8191.600	IN-EX	143 M/450, 3 - series - Trattore pe	-	1940008	10.0	16.01	73.0	F-8	G
8190.100	EX	143 M/450, 3 - series - Trattore pe	-	300957	11.0	18.01	73.0	A-8	G
8190.100	EX	143 M/450, 3 - series - Trattore pe	-	300957	11.0	18.01	73.0	A-8	G
8190.100	EX	143 M/450, 3 - series - Trattore pe	-	300957	11.0	18.01	73.0	A-8	G
8190.100	EX	143 M/450, 3 - series - Trattore pe	-	300957	11.0	18.01	73.0	A-8	G
8189.100	IN	143 M/450, 3 - series - Trattore pe	-	300957	11.0	18.01	80.0	A-8	G
8189.100	IN	143 M/450, 3 - series - Trattore pe	-	300957	11.0	18.01	80.0	A-8	G
8189.100	IN	143 M/450, 3 - series - Trattore pe	-	300957	11.0	18.01	80.0	A-8	G
8189.100	IN	143 M/450, 3 - series - Trattore pe	-	300957	11.0	18.01	80.0	A-8	G
8191.600	IN-EX	143 M/470, 3 - series - Pianale pia	-	1403823	10.0	16.01	73.0	F-8	G
8191.600	IN-EX	143 M/470, 3 - series - Pianale pia	-	1403823	10.0	16.01	73.0	F-8	G
8191.600	IN-EX	143 M/470, 3 - series - Pianale pia	-	1403823	10.0	16.01	73.0	F-8	G
8191.600	IN-EX	143 M/470, 3 - series - Pianale pia	-	1403823	10.0	16.01	73.0	F-8	G
8190.100	EX	143 M/470, 3 - series - Pianale pia	-	1523410	11.0	18.01	73.0	A-8	G
8190.100	EX	143 M/470, 3 - series - Pianale pia	-	1523410	11.0	18.01	73.0	A-8	G
8190.100	EX	143 M/470, 3 - series - Pianale pia	-	1523410	11.0	18.01	73.0	A-8	G
8190.100	EX	143 M/470, 3 - series - Pianale pia	-	1523410	11.0	18.01	73.0	A-8	G
8189.100	IN	143 M/470, 3 - series - Pianale pia	-	1523410	11.0	18.01	80.0	A-8	G
8189.100	IN	143 M/470, 3 - series - Pianale pia	-	1523410	11.0	18.01	80.0	A-8	G
8189.100	IN	143 M/470, 3 - series - Pianale pia	-	1523410	11.0	18.01	80.0	A-8	G

(D1) Internal diameter, (D2) External diameter, (B) Shape, (C) Material

VALVE GUIDES

IVT Ref.	Type	Model	Engine	OEM Ref.	D1	D2	Length	B	C
SCANIA									
8189.100	IN	143 M/470, 3 - series - Pianale pia	-	1523410	11.0	18.01	80.0	A-8	G
8191.600	IN-EX	143 M/470, 3 - series - Pianale pia	-	1940008	10.0	16.01	73.0	F-8	G
8191.600	IN-EX	143 M/470, 3 - series - Pianale pia	-	1940008	10.0	16.01	73.0	F-8	G
8191.600	IN-EX	143 M/470, 3 - series - Pianale pia	-	1940008	10.0	16.01	73.0	F-8	G
8191.600	IN-EX	143 M/470, 3 - series - Pianale pia	-	1940008	10.0	16.01	73.0	F-8	G
8189.100	IN	143 M/470, 3 - series - Pianale pia	-	300957	11.0	18.01	80.0	A-8	G
8190.100	EX	143 M/470, 3 - series - Pianale pia	-	300957	11.0	18.01	73.0	A-8	G
8190.100	EX	143 M/470, 3 - series - Pianale pia	-	300957	11.0	18.01	73.0	A-8	G
8190.100	EX	143 M/470, 3 - series - Pianale pia	-	300957	11.0	18.01	73.0	A-8	G
8189.100	IN	143 M/470, 3 - series - Pianale pia	-	300957	11.0	18.01	80.0	A-8	G
8189.100	IN	143 M/470, 3 - series - Pianale pia	-	300957	11.0	18.01	80.0	A-8	G
8189.100	IN	143 M/470, 3 - series - Pianale pia	-	300957	11.0	18.01	80.0	A-8	G
8190.100	EX	143 M/470, 3 - series - Pianale pia	-	300957	11.0	18.01	73.0	A-8	G
8191.600	IN-EX	143 M/470, 3 - series - Trattore pe	-	1403823	10.0	16.01	73.0	F-8	G
8191.600	IN-EX	143 M/470, 3 - series - Trattore pe	-	1403823	10.0	16.01	73.0	F-8	G
8191.600	IN-EX	143 M/470, 3 - series - Trattore pe	-	1403823	10.0	16.01	73.0	F-8	G
8191.600	IN-EX	143 M/470, 3 - series - Trattore pe	-	1403823	10.0	16.01	73.0	F-8	G
8190.100	EX	143 M/470, 3 - series - Trattore pe	-	1523410	11.0	18.01	73.0	A-8	G
8189.100	IN	143 M/470, 3 - series - Trattore pe	-	1523410	11.0	18.01	80.0	A-8	G
8190.100	EX	143 M/470, 3 - series - Trattore pe	-	1523410	11.0	18.01	73.0	A-8	G
8190.100	EX	143 M/470, 3 - series - Trattore pe	-	1523410	11.0	18.01	73.0	A-8	G
8190.100	EX	143 M/470, 3 - series - Trattore pe	-	1523410	11.0	18.01	73.0	A-8	G
8189.100	IN	143 M/470, 3 - series - Trattore pe	-	1523410	11.0	18.01	80.0	A-8	G
8189.100	IN	143 M/470, 3 - series - Trattore pe	-	1523410	11.0	18.01	80.0	A-8	G
8189.100	IN	143 M/470, 3 - series - Trattore pe	-	1523410	11.0	18.01	80.0	A-8	G
8191.600	IN-EX	143 M/470, 3 - series - Trattore pe	-	1940008	10.0	16.01	73.0	F-8	G
8191.600	IN-EX	143 M/470, 3 - series - Trattore pe	-	1940008	10.0	16.01	73.0	F-8	G
8191.600	IN-EX	143 M/470, 3 - series - Trattore pe	-	1940008	10.0	16.01	73.0	F-8	G
8191.600	IN-EX	143 M/470, 3 - series - Trattore pe	-	1940008	10.0	16.01	73.0	F-8	G
8190.100	EX	143 M/470, 3 - series - Trattore pe	-	300957	11.0	18.01	73.0	A-8	G
8190.100	EX	143 M/470, 3 - series - Trattore pe	-	300957	11.0	18.01	73.0	A-8	G
8190.100	EX	143 M/470, 3 - series - Trattore pe	-	300957	11.0	18.01	73.0	A-8	G
8190.100	EX	143 M/470, 3 - series - Trattore pe	-	300957	11.0	18.01	73.0	A-8	G
8189.100	IN	143 M/470, 3 - series - Trattore pe	-	300957	11.0	18.01	80.0	A-8	G
8189.100	IN	143 M/470, 3 - series - Trattore pe	-	300957	11.0	18.01	80.0	A-8	G
8189.100	IN	143 M/470, 3 - series - Trattore pe	-	300957	11.0	18.01	80.0	A-8	G
8189.100	IN	143 M/470, 3 - series - Trattore pe	-	300957	11.0	18.01	80.0	A-8	G
8191.600	IN-EX	143 M/500, 3 - series - Pianale pia	-	1403823	10.0	16.01	73.0	F-8	G
8191.600	IN-EX	143 M/500, 3 - series - Pianale pia	-	1403823	10.0	16.01	73.0	F-8	G
8190.100	EX	143 M/500, 3 - series - Pianale pia	-	1523410	11.0	18.01	73.0	A-8	G
8189.100	IN	143 M/500, 3 - series - Pianale pia	-	1523410	11.0	18.01	80.0	A-8	G
8189.100	IN	143 M/500, 3 - series - Pianale pia	-	1523410	11.0	18.01	80.0	A-8	G
8190.100	EX	143 M/500, 3 - series - Pianale pia	-	1523410	11.0	18.01	73.0	A-8	G
8191.600	IN-EX	143 M/500, 3 - series - Pianale pia	-	1940008	10.0	16.01	73.0	F-8	G
8191.600	IN-EX	143 M/500, 3 - series - Pianale pia	-	1940008	10.0	16.01	73.0	F-8	G
8190.100	EX	143 M/500, 3 - series - Pianale pia	-	300957	11.0	18.01	73.0	A-8	G
8190.100	EX	143 M/500, 3 - series - Pianale pia	-	300957	11.0	18.01	73.0	A-8	G
8189.100	IN	143 M/500, 3 - series - Pianale pia	-	300957	11.0	18.01	80.0	A-8	G
8189.100	IN	143 M/500, 3 - series - Pianale pia	-	300957	11.0	18.01	80.0	A-8	G
8191.600	IN-EX	143 M/500, 3 - series - Trattore pe	-	1403823	10.0	16.01	73.0	F-8	G
8191.600	IN-EX	143 M/500, 3 - series - Trattore pe	-	1403823	10.0	16.01	73.0	F-8	G
8190.100	EX	143 M/500, 3 - series - Trattore pe	-	1523410	11.0	18.01	73.0	A-8	G
8190.100	EX	143 M/500, 3 - series - Trattore pe	-	1523410	11.0	18.01	73.0	A-8	G
8189.100	IN	143 M/500, 3 - series - Trattore pe	-	1523410	11.0	18.01	80.0	A-8	G
8189.100	IN	143 M/500, 3 - series - Trattore pe	-	1523410	11.0	18.01	80.0	A-8	G
8191.600	IN-EX	143 M/500, 3 - series - Trattore pe	-	1940008	10.0	16.01	73.0	F-8	G
8191.600	IN-EX	143 M/500, 3 - series - Trattore pe	-	1940008	10.0	16.01	73.0	F-8	G
8190.100	EX	143 M/500, 3 - series - Trattore pe	-	300957	11.0	18.01	73.0	A-8	G
8190.100	EX	143 M/500, 3 - series - Trattore pe	-	300957	11.0	18.01	73.0	A-8	G
8189.100	IN	143 M/500, 3 - series - Trattore pe	-	300957	11.0	18.01	80.0	A-8	G
8189.100	IN	143 M/500, 3 - series - Trattore pe	-	300957	11.0	18.01	80.0	A-8	G
8191.600	IN-EX	144 C/460, 4 - series - Cassone ri	-	1403823	10.0	16.01	73.0	F-8	G

(D1) Internal diameter, (D2) External diameter, (B) Shape, (C) Material

VALVE GUIDES

IVT Ref.	Type	Model	Engine	OEM Ref.	D1	D2	Length	B	C
SCANIA									
8191.600	IN-EX	144 C/460, 4 - series - Cassone ri	-	1403823	10.0	16.01	73.0	F-8	G
8190.100	EX	144 C/460, 4 - series - Cassone ri	-	1523410	11.0	18.01	73.0	A-8	G
8190.100	EX	144 C/460, 4 - series - Cassone ri	-	1523410	11.0	18.01	73.0	A-8	G
8189.100	IN	144 C/460, 4 - series - Cassone ri	-	1523410	11.0	18.01	80.0	A-8	G
8189.100	IN	144 C/460, 4 - series - Cassone ri	-	1523410	11.0	18.01	80.0	A-8	G
8191.600	IN-EX	144 C/460, 4 - series - Cassone ri	-	1940008	10.0	16.01	73.0	F-8	G
8191.600	IN-EX	144 C/460, 4 - series - Cassone ri	-	1940008	10.0	16.01	73.0	F-8	G
8190.100	EX	144 C/460, 4 - series - Cassone ri	-	300957	11.0	18.01	73.0	A-8	G
8190.100	EX	144 C/460, 4 - series - Cassone ri	-	300957	11.0	18.01	73.0	A-8	G
8189.100	IN	144 C/460, 4 - series - Cassone ri	-	300957	11.0	18.01	80.0	A-8	G
8189.100	IN	144 C/460, 4 - series - Cassone ri	-	300957	11.0	18.01	80.0	A-8	G
8191.600	IN-EX	144 C/460, 4 - series - Pianale piat	-	1403823	10.0	16.01	73.0	F-8	G
8191.600	IN-EX	144 C/460, 4 - series - Pianale piat	-	1403823	10.0	16.01	73.0	F-8	G
8190.100	EX	144 C/460, 4 - series - Pianale piat	-	1523410	11.0	18.01	73.0	A-8	G
8190.100	EX	144 C/460, 4 - series - Pianale piat	-	1523410	11.0	18.01	73.0	A-8	G
8189.100	IN	144 C/460, 4 - series - Pianale piat	-	1523410	11.0	18.01	80.0	A-8	G
8189.100	IN	144 C/460, 4 - series - Pianale piat	-	1523410	11.0	18.01	80.0	A-8	G
8191.600	IN-EX	144 C/460, 4 - series - Pianale piat	-	1940008	10.0	16.01	73.0	F-8	G
8191.600	IN-EX	144 C/460, 4 - series - Pianale piat	-	1940008	10.0	16.01	73.0	F-8	G
8190.100	EX	144 C/460, 4 - series - Pianale piat	-	300957	11.0	18.01	73.0	A-8	G
8190.100	EX	144 C/460, 4 - series - Pianale piat	-	300957	11.0	18.01	73.0	A-8	G
8189.100	IN	144 C/460, 4 - series - Pianale piat	-	300957	11.0	18.01	80.0	A-8	G
8189.100	IN	144 C/460, 4 - series - Pianale piat	-	300957	11.0	18.01	80.0	A-8	G
8191.600	IN-EX	144 C/460, 4 - series - Trattore per	-	1403823	10.0	16.01	73.0	F-8	G
8191.600	IN-EX	144 C/460, 4 - series - Trattore per	-	1403823	10.0	16.01	73.0	F-8	G
8189.100	IN	144 C/460, 4 - series - Trattore per	-	1523410	11.0	18.01	80.0	A-8	G
8189.100	IN	144 C/460, 4 - series - Trattore per	-	1523410	11.0	18.01	80.0	A-8	G
8190.100	EX	144 C/460, 4 - series - Trattore per	-	1523410	11.0	18.01	73.0	A-8	G
8190.100	EX	144 C/460, 4 - series - Trattore per	-	1523410	11.0	18.01	73.0	A-8	G
8191.600	IN-EX	144 C/460, 4 - series - Trattore per	-	1940008	10.0	16.01	73.0	F-8	G
8191.600	IN-EX	144 C/460, 4 - series - Trattore per	-	1940008	10.0	16.01	73.0	F-8	G
8189.100	IN	144 C/460, 4 - series - Trattore per	-	300957	11.0	18.01	80.0	A-8	G
8190.100	EX	144 C/460, 4 - series - Trattore per	-	300957	11.0	18.01	73.0	A-8	G
8190.100	EX	144 C/460, 4 - series - Trattore per	-	300957	11.0	18.01	73.0	A-8	G
8189.100	IN	144 C/460, 4 - series - Trattore per	-	300957	11.0	18.01	80.0	A-8	G
8191.600	IN-EX	144 C/530, 4 - series - Cassone ri	-	1403823	10.0	16.01	73.0	F-8	G
8191.600	IN-EX	144 C/530, 4 - series - Cassone ri	-	1403823	10.0	16.01	73.0	F-8	G
8189.100	IN	144 C/530, 4 - series - Cassone ri	-	1523410	11.0	18.01	80.0	A-8	G
8190.100	EX	144 C/530, 4 - series - Cassone ri	-	1523410	11.0	18.01	73.0	A-8	G
8190.100	EX	144 C/530, 4 - series - Cassone ri	-	1523410	11.0	18.01	73.0	A-8	G
8189.100	IN	144 C/530, 4 - series - Cassone ri	-	1523410	11.0	18.01	80.0	A-8	G
8191.600	IN-EX	144 C/530, 4 - series - Cassone ri	-	1940008	10.0	16.01	73.0	F-8	G
8191.600	IN-EX	144 C/530, 4 - series - Cassone ri	-	1940008	10.0	16.01	73.0	F-8	G
8190.100	EX	144 C/530, 4 - series - Cassone ri	-	300957	11.0	18.01	73.0	A-8	G
8189.100	IN	144 C/530, 4 - series - Cassone ri	-	300957	11.0	18.01	80.0	A-8	G
8189.100	IN	144 C/530, 4 - series - Cassone ri	-	300957	11.0	18.01	80.0	A-8	G
8190.100	EX	144 C/530, 4 - series - Cassone ri	-	300957	11.0	18.01	73.0	A-8	G
8191.600	IN-EX	144 C/530, 4 - series - Pianale piat	-	1403823	10.0	16.01	73.0	F-8	G
8191.600	IN-EX	144 C/530, 4 - series - Pianale piat	-	1403823	10.0	16.01	73.0	F-8	G
8189.100	IN	144 C/530, 4 - series - Pianale piat	-	1523410	11.0	18.01	80.0	A-8	G
8189.100	IN	144 C/530, 4 - series - Pianale piat	-	1523410	11.0	18.01	80.0	A-8	G
8190.100	EX	144 C/530, 4 - series - Pianale piat	-	1523410	11.0	18.01	73.0	A-8	G
8190.100	EX	144 C/530, 4 - series - Pianale piat	-	1523410	11.0	18.01	73.0	A-8	G
8191.600	IN-EX	144 C/530, 4 - series - Pianale piat	-	1940008	10.0	16.01	73.0	F-8	G
8191.600	IN-EX	144 C/530, 4 - series - Pianale piat	-	1940008	10.0	16.01	73.0	F-8	G
8190.100	EX	144 C/530, 4 - series - Pianale piat	-	300957	11.0	18.01	73.0	A-8	G
8189.100	IN	144 C/530, 4 - series - Pianale piat	-	300957	11.0	18.01	80.0	A-8	G
8189.100	IN	144 C/530, 4 - series - Pianale piat	-	300957	11.0	18.01	80.0	A-8	G
8190.100	EX	144 C/530, 4 - series - Pianale piat	-	300957	11.0	18.01	73.0	A-8	G
8191.600	IN-EX	144 C/530, 4 - series - Trattore per	-	1403823	10.0	16.01	73.0	F-8	G
8191.600	IN-EX	144 C/530, 4 - series - Trattore per	-	1403823	10.0	16.01	73.0	F-8	G
8190.100	EX	144 C/530, 4 - series - Trattore per	-	1523410	11.0	18.01	73.0	A-8	G

(D1) Internal diameter, (D2) External diameter, (B) Shape, (C) Material

VALVE GUIDES

IVT Ref.	Type	Model	Engine	OEM Ref.	D1	D2	Length	B	C
SCANIA									
8189.100	IN	144 C/530, 4 - series - Trattore per	-	1523410	11.0	18.01	80.0	A-8	G
8189.100	IN	144 C/530, 4 - series - Trattore per	-	1523410	11.0	18.01	80.0	A-8	G
8190.100	EX	144 C/530, 4 - series - Trattore per	-	1523410	11.0	18.01	73.0	A-8	G
8191.600	IN-EX	144 C/530, 4 - series - Trattore per	-	1940008	10.0	16.01	73.0	F-8	G
8191.600	IN-EX	144 C/530, 4 - series - Trattore per	-	1940008	10.0	16.01	73.0	F-8	G
8190.100	EX	144 C/530, 4 - series - Trattore per	-	300957	11.0	18.01	73.0	A-8	G
8190.100	EX	144 C/530, 4 - series - Trattore per	-	300957	11.0	18.01	73.0	A-8	G
8189.100	IN	144 C/530, 4 - series - Trattore per	-	300957	11.0	18.01	80.0	A-8	G
8189.100	IN	144 C/530, 4 - series - Trattore per	-	300957	11.0	18.01	80.0	A-8	G
8191.600	IN-EX	144 G/460, 4 - series - Pianale pia	-	1403823	10.0	16.01	73.0	F-8	G
8191.600	IN-EX	144 G/460, 4 - series - Pianale pia	-	1403823	10.0	16.01	73.0	F-8	G
8191.600	IN-EX	144 G/460, 4 - series - Pianale pia	-	1403823	10.0	16.01	73.0	F-8	G
8191.600	IN-EX	144 G/460, 4 - series - Pianale pia	-	1403823	10.0	16.01	73.0	F-8	G
8191.600	IN-EX	144 G/460, 4 - series - Pianale pia	-	1403823	10.0	16.01	73.0	F-8	G
8189.100	IN	144 G/460, 4 - series - Pianale pia	-	1523410	11.0	18.01	80.0	A-8	G
8189.100	IN	144 G/460, 4 - series - Pianale pia	-	1523410	11.0	18.01	80.0	A-8	G
8190.100	EX	144 G/460, 4 - series - Pianale pia	-	1523410	11.0	18.01	73.0	A-8	G
8189.100	IN	144 G/460, 4 - series - Pianale pia	-	1523410	11.0	18.01	80.0	A-8	G
8190.100	EX	144 G/460, 4 - series - Pianale pia	-	1523410	11.0	18.01	73.0	A-8	G
8189.100	IN	144 G/460, 4 - series - Pianale pia	-	1523410	11.0	18.01	80.0	A-8	G
8190.100	EX	144 G/460, 4 - series - Pianale pia	-	1523410	11.0	18.01	73.0	A-8	G
8190.100	EX	144 G/460, 4 - series - Pianale pia	-	1523410	11.0	18.01	73.0	A-8	G
8190.100	EX	144 G/460, 4 - series - Pianale pia	-	1523410	11.0	18.01	73.0	A-8	G
8189.100	IN	144 G/460, 4 - series - Pianale pia	-	1523410	11.0	18.01	80.0	A-8	G
8191.600	IN-EX	144 G/460, 4 - series - Pianale pia	-	1940008	10.0	16.01	73.0	F-8	G
8191.600	IN-EX	144 G/460, 4 - series - Pianale pia	-	1940008	10.0	16.01	73.0	F-8	G
8191.600	IN-EX	144 G/460, 4 - series - Pianale pia	-	1940008	10.0	16.01	73.0	F-8	G
8191.600	IN-EX	144 G/460, 4 - series - Pianale pia	-	1940008	10.0	16.01	73.0	F-8	G
8191.600	IN-EX	144 G/460, 4 - series - Pianale pia	-	1940008	10.0	16.01	73.0	F-8	G
8190.100	EX	144 G/460, 4 - series - Pianale pia	-	300957	11.0	18.01	73.0	A-8	G
8189.100	IN	144 G/460, 4 - series - Pianale pia	-	300957	11.0	18.01	80.0	A-8	G
8190.100	EX	144 G/460, 4 - series - Pianale pia	-	300957	11.0	18.01	73.0	A-8	G
8190.100	EX	144 G/460, 4 - series - Pianale pia	-	300957	11.0	18.01	73.0	A-8	G
8190.100	EX	144 G/460, 4 - series - Pianale pia	-	300957	11.0	18.01	73.0	A-8	G
8189.100	IN	144 G/460, 4 - series - Pianale pia	-	300957	11.0	18.01	80.0	A-8	G
8189.100	IN	144 G/460, 4 - series - Pianale pia	-	300957	11.0	18.01	80.0	A-8	G
8190.100	EX	144 G/460, 4 - series - Pianale pia	-	300957	11.0	18.01	73.0	A-8	G
8189.100	IN	144 G/460, 4 - series - Pianale pia	-	300957	11.0	18.01	80.0	A-8	G
8189.100	IN	144 G/460, 4 - series - Pianale pia	-	300957	11.0	18.01	80.0	A-8	G
8191.600	IN-EX	144 G/460, 4 - series - Trattore pe	-	1403823	10.0	16.01	73.0	F-8	G
8191.600	IN-EX	144 G/460, 4 - series - Trattore pe	-	1403823	10.0	16.01	73.0	F-8	G
8191.600	IN-EX	144 G/460, 4 - series - Trattore pe	-	1403823	10.0	16.01	73.0	F-8	G
8190.100	EX	144 G/460, 4 - series - Trattore pe	-	1523410	11.0	18.01	73.0	A-8	G
8190.100	EX	144 G/460, 4 - series - Trattore pe	-	1523410	11.0	18.01	73.0	A-8	G
8190.100	EX	144 G/460, 4 - series - Trattore pe	-	1523410	11.0	18.01	73.0	A-8	G
8189.100	IN	144 G/460, 4 - series - Trattore pe	-	1523410	11.0	18.01	80.0	A-8	G
8189.100	IN	144 G/460, 4 - series - Trattore pe	-	1523410	11.0	18.01	80.0	A-8	G
8189.100	IN	144 G/460, 4 - series - Trattore pe	-	1523410	11.0	18.01	80.0	A-8	G
8191.600	IN-EX	144 G/460, 4 - series - Trattore pe	-	1940008	10.0	16.01	73.0	F-8	G
8191.600	IN-EX	144 G/460, 4 - series - Trattore pe	-	1940008	10.0	16.01	73.0	F-8	G
8191.600	IN-EX	144 G/460, 4 - series - Trattore pe	-	1940008	10.0	16.01	73.0	F-8	G
8189.100	IN	144 G/460, 4 - series - Trattore pe	-	300957	11.0	18.01	80.0	A-8	G
8190.100	EX	144 G/460, 4 - series - Trattore pe	-	300957	11.0	18.01	73.0	A-8	G
8189.100	IN	144 G/460, 4 - series - Trattore pe	-	300957	11.0	18.01	80.0	A-8	G
8189.100	IN	144 G/460, 4 - series - Trattore pe	-	300957	11.0	18.01	80.0	A-8	G
8190.100	EX	144 G/460, 4 - series - Trattore pe	-	300957	11.0	18.01	73.0	A-8	G
8190.100	EX	144 G/460, 4 - series - Trattore pe	-	300957	11.0	18.01	73.0	A-8	G
8191.600	IN-EX	144 G/530, 4 - series - Pianale pia	-	1403823	10.0	16.01	73.0	F-8	G
8191.600	IN-EX	144 G/530, 4 - series - Pianale pia	-	1403823	10.0	16.01	73.0	F-8	G
8191.600	IN-EX	144 G/530, 4 - series - Pianale pia	-	1403823	10.0	16.01	73.0	F-8	G
8191.600	IN-EX	144 G/530, 4 - series - Pianale pia	-	1403823	10.0	16.01	73.0	F-8	G
8191.600	IN-EX	144 G/530, 4 - series - Pianale pia	-	1403823	10.0	16.01	73.0	F-8	G

(D1) Internal diameter, (D2) External diameter, (B) Shape, (C) Material

VALVE GUIDES

IVT Ref.	Type	Model	Engine	OEM Ref.	D1	D2	Length	B	C
SCANIA									
8190.100	EX	144 G/530, 4 - series - Pianale pia	-	1523410	11.0	18.01	73.0	A-8	G
8190.100	EX	144 G/530, 4 - series - Pianale pia	-	1523410	11.0	18.01	73.0	A-8	G
8189.100	IN	144 G/530, 4 - series - Pianale pia	-	1523410	11.0	18.01	80.0	A-8	G
8190.100	EX	144 G/530, 4 - series - Pianale pia	-	1523410	11.0	18.01	73.0	A-8	G
8190.100	EX	144 G/530, 4 - series - Pianale pia	-	1523410	11.0	18.01	73.0	A-8	G
8189.100	IN	144 G/530, 4 - series - Pianale pia	-	1523410	11.0	18.01	80.0	A-8	G
8190.100	EX	144 G/530, 4 - series - Pianale pia	-	1523410	11.0	18.01	73.0	A-8	G
8189.100	IN	144 G/530, 4 - series - Pianale pia	-	1523410	11.0	18.01	80.0	A-8	G
8189.100	IN	144 G/530, 4 - series - Pianale pia	-	1523410	11.0	18.01	80.0	A-8	G
8189.100	IN	144 G/530, 4 - series - Pianale pia	-	1523410	11.0	18.01	80.0	A-8	G
8191.600	IN-EX	144 G/530, 4 - series - Pianale pia	-	1940008	10.0	16.01	73.0	F-8	G
8191.600	IN-EX	144 G/530, 4 - series - Pianale pia	-	1940008	10.0	16.01	73.0	F-8	G
8191.600	IN-EX	144 G/530, 4 - series - Pianale pia	-	1940008	10.0	16.01	73.0	F-8	G
8191.600	IN-EX	144 G/530, 4 - series - Pianale pia	-	1940008	10.0	16.01	73.0	F-8	G
8191.600	IN-EX	144 G/530, 4 - series - Pianale pia	-	1940008	10.0	16.01	73.0	F-8	G
8189.100	IN	144 G/530, 4 - series - Pianale pia	-	300957	11.0	18.01	80.0	A-8	G
8189.100	IN	144 G/530, 4 - series - Pianale pia	-	300957	11.0	18.01	80.0	A-8	G
8189.100	IN	144 G/530, 4 - series - Pianale pia	-	300957	11.0	18.01	80.0	A-8	G
8189.100	IN	144 G/530, 4 - series - Pianale pia	-	300957	11.0	18.01	80.0	A-8	G
8189.100	IN	144 G/530, 4 - series - Pianale pia	-	300957	11.0	18.01	80.0	A-8	G
8190.100	EX	144 G/530, 4 - series - Pianale pia	-	300957	11.0	18.01	73.0	A-8	G
8190.100	EX	144 G/530, 4 - series - Pianale pia	-	300957	11.0	18.01	73.0	A-8	G
8190.100	EX	144 G/530, 4 - series - Pianale pia	-	300957	11.0	18.01	73.0	A-8	G
8190.100	EX	144 G/530, 4 - series - Pianale pia	-	300957	11.0	18.01	73.0	A-8	G
8190.100	EX	144 G/530, 4 - series - Pianale pia	-	300957	11.0	18.01	73.0	A-8	G
8191.600	IN-EX	144 G/530, 4 - series - Trattore pe	-	1403823	10.0	16.01	73.0	F-8	G
8191.600	IN-EX	144 G/530, 4 - series - Trattore pe	-	1403823	10.0	16.01	73.0	F-8	G
8191.600	IN-EX	144 G/530, 4 - series - Trattore pe	-	1403823	10.0	16.01	73.0	F-8	G
8189.100	IN	144 G/530, 4 - series - Trattore pe	-	1523410	11.0	18.01	80.0	A-8	G
8189.100	IN	144 G/530, 4 - series - Trattore pe	-	1523410	11.0	18.01	80.0	A-8	G
8189.100	IN	144 G/530, 4 - series - Trattore pe	-	1523410	11.0	18.01	80.0	A-8	G
8190.100	EX	144 G/530, 4 - series - Trattore pe	-	1523410	11.0	18.01	73.0	A-8	G
8190.100	EX	144 G/530, 4 - series - Trattore pe	-	1523410	11.0	18.01	73.0	A-8	G
8190.100	EX	144 G/530, 4 - series - Trattore pe	-	1523410	11.0	18.01	73.0	A-8	G
8191.600	IN-EX	144 G/530, 4 - series - Trattore pe	-	1940008	10.0	16.01	73.0	F-8	G
8191.600	IN-EX	144 G/530, 4 - series - Trattore pe	-	1940008	10.0	16.01	73.0	F-8	G
8191.600	IN-EX	144 G/530, 4 - series - Trattore pe	-	1940008	10.0	16.01	73.0	F-8	G
8189.100	IN	144 G/530, 4 - series - Trattore pe	-	300957	11.0	18.01	80.0	A-8	G
8189.100	IN	144 G/530, 4 - series - Trattore pe	-	300957	11.0	18.01	80.0	A-8	G
8189.100	IN	144 G/530, 4 - series - Trattore pe	-	300957	11.0	18.01	80.0	A-8	G
8190.100	EX	144 G/530, 4 - series - Trattore pe	-	300957	11.0	18.01	73.0	A-8	G
8190.100	EX	144 G/530, 4 - series - Trattore pe	-	300957	11.0	18.01	73.0	A-8	G
8190.100	EX	144 G/530, 4 - series - Trattore pe	-	300957	11.0	18.01	73.0	A-8	G
8191.600	IN-EX	144 L/460, 4 - series - Pianale piat	-	1403823	10.0	16.01	73.0	F-8	G
8191.600	IN-EX	144 L/460, 4 - series - Pianale piat	-	1403823	10.0	16.01	73.0	F-8	G
8191.600	IN-EX	144 L/460, 4 - series - Pianale piat	-	1403823	10.0	16.01	73.0	F-8	G
8191.600	IN-EX	144 L/460, 4 - series - Pianale piat	-	1403823	10.0	16.01	73.0	F-8	G
8189.100	IN	144 L/460, 4 - series - Pianale piat	-	1523410	11.0	18.01	80.0	A-8	G
8189.100	IN	144 L/460, 4 - series - Pianale piat	-	1523410	11.0	18.01	80.0	A-8	G
8189.100	IN	144 L/460, 4 - series - Pianale piat	-	1523410	11.0	18.01	80.0	A-8	G
8190.100	EX	144 L/460, 4 - series - Pianale piat	-	1523410	11.0	18.01	73.0	A-8	G
8190.100	EX	144 L/460, 4 - series - Pianale piat	-	1523410	11.0	18.01	73.0	A-8	G
8190.100	EX	144 L/460, 4 - series - Pianale piat	-	1523410	11.0	18.01	73.0	A-8	G
8191.600	IN-EX	144 L/460, 4 - series - Pianale piat	-	1940008	10.0	16.01	73.0	F-8	G
8191.600	IN-EX	144 L/460, 4 - series - Pianale piat	-	1940008	10.0	16.01	73.0	F-8	G
8191.600	IN-EX	144 L/460, 4 - series - Pianale piat	-	1940008	10.0	16.01	73.0	F-8	G
8191.600	IN-EX	144 L/460, 4 - series - Pianale piat	-	1940008	10.0	16.01	73.0	F-8	G
8190.100	EX	144 L/460, 4 - series - Pianale piat	-	300957	11.0	18.01	73.0	A-8	G
8189.100	IN	144 L/460, 4 - series - Pianale piat	-	300957	11.0	18.01	80.0	A-8	G
8189.100	IN	144 L/460, 4 - series - Pianale piat	-	300957	11.0	18.01	80.0	A-8	G
8189.100	IN	144 L/460, 4 - series - Pianale piat	-	300957	11.0	18.01	80.0	A-8	G
8190.100	EX	144 L/460, 4 - series - Pianale piat	-	300957	11.0	18.01	73.0	A-8	G

(D1) Internal diameter, (D2) External diameter, (B) Shape, (C) Material

VALVE GUIDES

IVT Ref.	Type	Model	Engine	OEM Ref.	D1	D2	Length	B	C
SCANIA									
8190.100	EX	144 L/460, 4 - series - Pianale piat	-	300957	11.0	18.01	73.0	A-8	G
8191.600	IN-EX	144 L/460, 4 - series - Trattore per	-	1403823	10.0	16.01	73.0	F-8	G
8191.600	IN-EX	144 L/460, 4 - series - Trattore per	-	1403823	10.0	16.01	73.0	F-8	G
8191.600	IN-EX	144 L/460, 4 - series - Trattore per	-	1403823	10.0	16.01	73.0	F-8	G
8190.100	EX	144 L/460, 4 - series - Trattore per	-	1523410	11.0	18.01	73.0	A-8	G
8189.100	IN	144 L/460, 4 - series - Trattore per	-	1523410	11.0	18.01	80.0	A-8	G
8190.100	EX	144 L/460, 4 - series - Trattore per	-	1523410	11.0	18.01	73.0	A-8	G
8190.100	EX	144 L/460, 4 - series - Trattore per	-	1523410	11.0	18.01	73.0	A-8	G
8189.100	IN	144 L/460, 4 - series - Trattore per	-	1523410	11.0	18.01	80.0	A-8	G
8189.100	IN	144 L/460, 4 - series - Trattore per	-	1523410	11.0	18.01	80.0	A-8	G
8191.600	IN-EX	144 L/460, 4 - series - Trattore per	-	1940008	10.0	16.01	73.0	F-8	G
8191.600	IN-EX	144 L/460, 4 - series - Trattore per	-	1940008	10.0	16.01	73.0	F-8	G
8191.600	IN-EX	144 L/460, 4 - series - Trattore per	-	1940008	10.0	16.01	73.0	F-8	G
8190.100	EX	144 L/460, 4 - series - Trattore per	-	300957	11.0	18.01	73.0	A-8	G
8190.100	EX	144 L/460, 4 - series - Trattore per	-	300957	11.0	18.01	73.0	A-8	G
8190.100	EX	144 L/460, 4 - series - Trattore per	-	300957	11.0	18.01	73.0	A-8	G
8189.100	IN	144 L/460, 4 - series - Trattore per	-	300957	11.0	18.01	80.0	A-8	G
8189.100	IN	144 L/460, 4 - series - Trattore per	-	300957	11.0	18.01	80.0	A-8	G
8189.100	IN	144 L/460, 4 - series - Trattore per	-	300957	11.0	18.01	80.0	A-8	G
8191.600	IN-EX	144 L/530, 4 - series - Pianale piat	-	1403823	10.0	16.01	73.0	F-8	G
8191.600	IN-EX	144 L/530, 4 - series - Pianale piat	-	1403823	10.0	16.01	73.0	F-8	G
8191.600	IN-EX	144 L/530, 4 - series - Pianale piat	-	1403823	10.0	16.01	73.0	F-8	G
8191.600	IN-EX	144 L/530, 4 - series - Pianale piat	-	1403823	10.0	16.01	73.0	F-8	G
8189.100	IN	144 L/530, 4 - series - Pianale piat	-	1523410	11.0	18.01	80.0	A-8	G
8189.100	IN	144 L/530, 4 - series - Pianale piat	-	1523410	11.0	18.01	80.0	A-8	G
8189.100	IN	144 L/530, 4 - series - Pianale piat	-	1523410	11.0	18.01	80.0	A-8	G
8190.100	EX	144 L/530, 4 - series - Pianale piat	-	1523410	11.0	18.01	73.0	A-8	G
8190.100	EX	144 L/530, 4 - series - Pianale piat	-	1523410	11.0	18.01	73.0	A-8	G
8190.100	EX	144 L/530, 4 - series - Pianale piat	-	1523410	11.0	18.01	73.0	A-8	G
8191.600	IN-EX	144 L/530, 4 - series - Pianale piat	-	1940008	10.0	16.01	73.0	F-8	G
8191.600	IN-EX	144 L/530, 4 - series - Pianale piat	-	1940008	10.0	16.01	73.0	F-8	G
8191.600	IN-EX	144 L/530, 4 - series - Pianale piat	-	1940008	10.0	16.01	73.0	F-8	G
8191.600	IN-EX	144 L/530, 4 - series - Pianale piat	-	1940008	10.0	16.01	73.0	F-8	G
8190.100	EX	144 L/530, 4 - series - Pianale piat	-	300957	11.0	18.01	73.0	A-8	G
8189.100	IN	144 L/530, 4 - series - Pianale piat	-	300957	11.0	18.01	80.0	A-8	G
8189.100	IN	144 L/530, 4 - series - Pianale piat	-	300957	11.0	18.01	80.0	A-8	G
8189.100	IN	144 L/530, 4 - series - Pianale piat	-	300957	11.0	18.01	80.0	A-8	G
8190.100	EX	144 L/530, 4 - series - Pianale piat	-	300957	11.0	18.01	73.0	A-8	G
8190.100	EX	144 L/530, 4 - series - Pianale piat	-	300957	11.0	18.01	73.0	A-8	G
8191.600	IN-EX	144 L/530, 4 - series - Trattore per	-	1403823	10.0	16.01	73.0	F-8	G
8191.600	IN-EX	144 L/530, 4 - series - Trattore per	-	1403823	10.0	16.01	73.0	F-8	G
8191.600	IN-EX	144 L/530, 4 - series - Trattore per	-	1403823	10.0	16.01	73.0	F-8	G
8190.100	EX	144 L/530, 4 - series - Trattore per	-	1523410	11.0	18.01	73.0	A-8	G
8189.100	IN	144 L/530, 4 - series - Trattore per	-	1523410	11.0	18.01	80.0	A-8	G
8190.100	EX	144 L/530, 4 - series - Trattore per	-	1523410	11.0	18.01	73.0	A-8	G
8189.100	IN	144 L/530, 4 - series - Trattore per	-	1523410	11.0	18.01	80.0	A-8	G
8189.100	IN	144 L/530, 4 - series - Trattore per	-	1523410	11.0	18.01	80.0	A-8	G
8190.100	EX	144 L/530, 4 - series - Trattore per	-	1523410	11.0	18.01	73.0	A-8	G
8191.600	IN-EX	144 L/530, 4 - series - Trattore per	-	1940008	10.0	16.01	73.0	F-8	G
8191.600	IN-EX	144 L/530, 4 - series - Trattore per	-	1940008	10.0	16.01	73.0	F-8	G
8191.600	IN-EX	144 L/530, 4 - series - Trattore per	-	1940008	10.0	16.01	73.0	F-8	G
8189.100	IN	144 L/530, 4 - series - Trattore per	-	300957	11.0	18.01	80.0	A-8	G
8190.100	EX	144 L/530, 4 - series - Trattore per	-	300957	11.0	18.01	73.0	A-8	G
8189.100	IN	144 L/530, 4 - series - Trattore per	-	300957	11.0	18.01	80.0	A-8	G
8190.100	EX	144 L/530, 4 - series - Trattore per	-	300957	11.0	18.01	73.0	A-8	G
8190.100	EX	144 L/530, 4 - series - Trattore per	-	300957	11.0	18.01	73.0	A-8	G
8189.100	IN	144 L/530, 4 - series - Trattore per	-	300957	11.0	18.01	80.0	A-8	G
8214.600	IN	3 - series, Betoniera	113 H/320		11.0	18.01	75.0	F-8	G
8214.600	IN	3 - series, Betoniera	113 H/320		11.0	18.01	75.0	F-8	G
8214.600	IN	3 - series, Betoniera	113 H/360		11.0	18.01	75.0	F-8	G
8214.600	IN	3 - series, Betoniera	113 H/360		11.0	18.01	75.0	F-8	G
8214.600	IN	3 - series, Betoniera	113 H/380		11.0	18.01	75.0	F-8	G

(D1) Internal diameter, (D2) External diameter, (B) Shape, (C) Material

VALVE GUIDES

SCANIA

IVT Ref.	Type	Model	Engine	OEM Ref.	D1	D2	Length	B	C
8214.600	IN	3 - series, Betoniera	113 M/320		11.0	18.01	75.0	F-8	G
8214.600	IN	3 - series, Betoniera	113 M/360		11.0	18.01	75.0	F-8	G
8214.600	IN	3 - series, Cassone ribaltabile	113 E/320		11.0	18.01	75.0	F-8	G
8214.600	IN	3 - series, Cassone ribaltabile	113 E/320		11.0	18.01	75.0	F-8	G
8214.600	IN	3 - series, Cassone ribaltabile	113 E/320		11.0	18.01	75.0	F-8	G
8214.600	IN	3 - series, Cassone ribaltabile	113 E/320		11.0	18.01	75.0	F-8	G
8214.600	IN	3 - series, Cassone ribaltabile	113 E/360		11.0	18.01	75.0	F-8	G
8214.600	IN	3 - series, Cassone ribaltabile	113 E/360		11.0	18.01	75.0	F-8	G
8214.600	IN	3 - series, Cassone ribaltabile	113 E/380		11.0	18.01	75.0	F-8	G
8214.600	IN	3 - series, Cassone ribaltabile	113 E/380		11.0	18.01	75.0	F-8	G
8214.600	IN	3 - series, Cassone ribaltabile	113 H/310		11.0	18.01	75.0	F-8	G
8214.600	IN	3 - series, Cassone ribaltabile	113 H/310		11.0	18.01	75.0	F-8	G
8214.600	IN	3 - series, Cassone ribaltabile	113 H/310		11.0	18.01	75.0	F-8	G
8214.600	IN	3 - series, Cassone ribaltabile	113 H/310		11.0	18.01	75.0	F-8	G
8214.600	IN	3 - series, Cassone ribaltabile	113 H/310		11.0	18.01	75.0	F-8	G
8214.600	IN	3 - series, Cassone ribaltabile	113 H/310		11.0	18.01	75.0	F-8	G
8214.600	IN	3 - series, Cassone ribaltabile	113 H/320		11.0	18.01	75.0	F-8	G
8214.600	IN	3 - series, Cassone ribaltabile	113 H/320		11.0	18.01	75.0	F-8	G
8214.600	IN	3 - series, Cassone ribaltabile	113 H/320		11.0	18.01	75.0	F-8	G
8214.600	IN	3 - series, Cassone ribaltabile	113 H/320		11.0	18.01	75.0	F-8	G
8214.600	IN	3 - series, Cassone ribaltabile	113 H/320		11.0	18.01	75.0	F-8	G
8214.600	IN	3 - series, Cassone ribaltabile	113 H/360		11.0	18.01	75.0	F-8	G
8214.600	IN	3 - series, Cassone ribaltabile	113 H/360		11.0	18.01	75.0	F-8	G
8214.600	IN	3 - series, Cassone ribaltabile	113 H/360		11.0	18.01	75.0	F-8	G
8214.600	IN	3 - series, Cassone ribaltabile	113 H/360		11.0	18.01	75.0	F-8	G
8214.600	IN	3 - series, Cassone ribaltabile	113 H/360		11.0	18.01	75.0	F-8	G
8214.600	IN	3 - series, Cassone ribaltabile	113 H/360		11.0	18.01	75.0	F-8	G
8214.600	IN	3 - series, Cassone ribaltabile	113 H/380		11.0	18.01	75.0	F-8	G
8214.600	IN	3 - series, Cassone ribaltabile	113 H/380		11.0	18.01	75.0	F-8	G
8214.600	IN	3 - series, Cassone ribaltabile	143 E/420		11.0	18.01	75.0	F-8	G
8214.600	IN	3 - series, Cassone ribaltabile	143 E/420		11.0	18.01	75.0	F-8	G
8214.600	IN	3 - series, Cassone ribaltabile	143 E/450		11.0	18.01	75.0	F-8	G
8214.600	IN	3 - series, Cassone ribaltabile	143 E/450		11.0	18.01	75.0	F-8	G
8214.600	IN	3 - series, Cassone ribaltabile	143 E/500		11.0	18.01	75.0	F-8	G
8214.600	IN	3 - series, Cassone ribaltabile	143 E/500		11.0	18.01	75.0	F-8	G
8214.600	IN	3 - series, Cassone ribaltabile	143 H/420		11.0	18.01	75.0	F-8	G
8214.600	IN	3 - series, Cassone ribaltabile	T 113 E/320		11.0	18.01	75.0	F-8	G
8214.600	IN	3 - series, Cassone ribaltabile	T 113 E/360		11.0	18.01	75.0	F-8	G
8214.600	IN	3 - series, Cassone ribaltabile	T 113 H/320		11.0	18.01	75.0	F-8	G
8214.600	IN	3 - series, Cassone ribaltabile	T 113 H/360		11.0	18.01	75.0	F-8	G
8214.600	IN	3 - series, Pianale piatto / Telaio	113 E/320		11.0	18.01	75.0	F-8	G
8214.600	IN	3 - series, Pianale piatto / Telaio	113 E/320		11.0	18.01	75.0	F-8	G
8214.600	IN	3 - series, Pianale piatto / Telaio	113 E/320		11.0	18.01	75.0	F-8	G
8214.600	IN	3 - series, Pianale piatto / Telaio	113 E/320		11.0	18.01	75.0	F-8	G
8214.600	IN	3 - series, Pianale piatto / Telaio	113 H/320		11.0	18.01	75.0	F-8	G
8214.600	IN	3 - series, Pianale piatto / Telaio	113 H/320		11.0	18.01	75.0	F-8	G
8214.600	IN	3 - series, Pianale piatto / Telaio	113 H/320		11.0	18.01	75.0	F-8	G
8214.600	IN	3 - series, Pianale piatto / Telaio	113 H/320		11.0	18.01	75.0	F-8	G
8214.600	IN	3 - series, Pianale piatto / Telaio	113 H/320		11.0	18.01	75.0	F-8	G
8214.600	IN	3 - series, Pianale piatto / Telaio	113 H/320		11.0	18.01	75.0	F-8	G
8214.600	IN	3 - series, Pianale piatto / Telaio	113 H/320		11.0	18.01	75.0	F-8	G
8214.600	IN	3 - series, Pianale piatto / Telaio	113 H/360		11.0	18.01	75.0	F-8	G
8214.600	IN	3 - series, Pianale piatto / Telaio	113 H/360		11.0	18.01	75.0	F-8	G
8214.600	IN	3 - series, Pianale piatto / Telaio	113 H/360		11.0	18.01	75.0	F-8	G
8214.600	IN	3 - series, Pianale piatto / Telaio	113 H/360		11.0	18.01	75.0	F-8	G
8214.600	IN	3 - series, Pianale piatto / Telaio	113 H/360		11.0	18.01	75.0	F-8	G
8214.600	IN	3 - series, Pianale piatto / Telaio	113 H/360		11.0	18.01	75.0	F-8	G
8214.600	IN	3 - series, Pianale piatto / Telaio	113 H/360		11.0	18.01	75.0	F-8	G
8214.600	IN	3 - series, Pianale piatto / Telaio	113 H/360		11.0	18.01	75.0	F-8	G
8214.600	IN	3 - series, Pianale piatto / Telaio	113 H/360		11.0	18.01	75.0	F-8	G
8214.600	IN	3 - series, Pianale piatto / Telaio	113 H/380		11.0	18.01	75.0	F-8	G
8214.600	IN	3 - series, Pianale piatto / Telaio	113 H/380		11.0	18.01	75.0	F-8	G

(D1) Internal diameter, (D2) External diameter, (B) Shape, (C) Material

VALVE GUIDES

SCANIA

IVT Ref.	Type	Model	Engine	OEM Ref.	D1	D2	Length	B	C
8214.600	IN	3 - series, Pianale piatto / Telaio	113 H/380		11.0	18.01	75.0	F-8	G
8214.600	IN	3 - series, Pianale piatto / Telaio	113 M/320		11.0	18.01	75.0	F-8	G
8214.600	IN	3 - series, Pianale piatto / Telaio	113 M/320		11.0	18.01	75.0	F-8	G
8214.600	IN	3 - series, Pianale piatto / Telaio	113 M/320		11.0	18.01	75.0	F-8	G
8214.600	IN	3 - series, Pianale piatto / Telaio	113 M/320		11.0	18.01	75.0	F-8	G
8214.600	IN	3 - series, Pianale piatto / Telaio	113 M/360		11.0	18.01	75.0	F-8	G
8214.600	IN	3 - series, Pianale piatto / Telaio	113 M/360		11.0	18.01	75.0	F-8	G
8214.600	IN	3 - series, Pianale piatto / Telaio	113 M/360		11.0	18.01	75.0	F-8	G
8214.600	IN	3 - series, Pianale piatto / Telaio	113 M/360		11.0	18.01	75.0	F-8	G
8214.600	IN	3 - series, Pianale piatto / Telaio	113 M/380		11.0	18.01	75.0	F-8	G
8214.600	IN	3 - series, Pianale piatto / Telaio	113 M/380		11.0	18.01	75.0	F-8	G
8214.600	IN	3 - series, Pianale piatto / Telaio	113 M/400		11.0	18.01	75.0	F-8	G
8214.600	IN	3 - series, Pianale piatto / Telaio	113 M/400		11.0	18.01	75.0	F-8	G
8214.600	IN	3 - series, Pianale piatto / Telaio	143 E/420		11.0	18.01	75.0	F-8	G
8214.600	IN	3 - series, Pianale piatto / Telaio	143 E/450		11.0	18.01	75.0	F-8	G
8214.600	IN	3 - series, Pianale piatto / Telaio	143 E/500		11.0	18.01	75.0	F-8	G
8214.600	IN	3 - series, Pianale piatto / Telaio	143 H/400		11.0	18.01	75.0	F-8	G
8214.600	IN	3 - series, Pianale piatto / Telaio	143 H/400		11.0	18.01	75.0	F-8	G
8214.600	IN	3 - series, Pianale piatto / Telaio	143 H/400		11.0	18.01	75.0	F-8	G
8214.600	IN	3 - series, Pianale piatto / Telaio	143 H/400		11.0	18.01	75.0	F-8	G
8214.600	IN	3 - series, Pianale piatto / Telaio	143 H/400		11.0	18.01	75.0	F-8	G
8214.600	IN	3 - series, Pianale piatto / Telaio	143 H/400		11.0	18.01	75.0	F-8	G
8214.600	IN	3 - series, Pianale piatto / Telaio	143 H/420		11.0	18.01	75.0	F-8	G
8214.600	IN	3 - series, Pianale piatto / Telaio	143 H/420		11.0	18.01	75.0	F-8	G
8214.600	IN	3 - series, Pianale piatto / Telaio	143 H/420		11.0	18.01	75.0	F-8	G
8214.600	IN	3 - series, Pianale piatto / Telaio	143 H/450		11.0	18.01	75.0	F-8	G
8214.600	IN	3 - series, Pianale piatto / Telaio	143 H/450		11.0	18.01	75.0	F-8	G
8214.600	IN	3 - series, Pianale piatto / Telaio	143 H/450		11.0	18.01	75.0	F-8	G
8214.600	IN	3 - series, Pianale piatto / Telaio	143 H/450		11.0	18.01	75.0	F-8	G
8214.600	IN	3 - series, Pianale piatto / Telaio	143 H/450		11.0	18.01	75.0	F-8	G
8214.600	IN	3 - series, Pianale piatto / Telaio	143 H/450		11.0	18.01	75.0	F-8	G
8214.600	IN	3 - series, Pianale piatto / Telaio	143 H/470		11.0	18.01	75.0	F-8	G
8214.600	IN	3 - series, Pianale piatto / Telaio	143 H/470		11.0	18.01	75.0	F-8	G
8214.600	IN	3 - series, Pianale piatto / Telaio	143 H/470		11.0	18.01	75.0	F-8	G
8214.600	IN	3 - series, Pianale piatto / Telaio	143 H/470		11.0	18.01	75.0	F-8	G
8214.600	IN	3 - series, Pianale piatto / Telaio	143 H/470		11.0	18.01	75.0	F-8	G
8214.600	IN	3 - series, Pianale piatto / Telaio	143 H/470		11.0	18.01	75.0	F-8	G
8214.600	IN	3 - series, Pianale piatto / Telaio	143 H/500		11.0	18.01	75.0	F-8	G
8214.600	IN	3 - series, Pianale piatto / Telaio	143 H/500		11.0	18.01	75.0	F-8	G
8214.600	IN	3 - series, Pianale piatto / Telaio	143 H/500		11.0	18.01	75.0	F-8	G
8214.600	IN	3 - series, Pianale piatto / Telaio	143 M/420		11.0	18.01	75.0	F-8	G
8214.600	IN	3 - series, Pianale piatto / Telaio	143 M/420		11.0	18.01	75.0	F-8	G
8214.600	IN	3 - series, Pianale piatto / Telaio	143 M/450		11.0	18.01	75.0	F-8	G
8214.600	IN	3 - series, Pianale piatto / Telaio	143 M/450		11.0	18.01	75.0	F-8	G
8214.600	IN	3 - series, Pianale piatto / Telaio	143 M/450		11.0	18.01	75.0	F-8	G
8214.600	IN	3 - series, Pianale piatto / Telaio	143 M/450		11.0	18.01	75.0	F-8	G
8214.600	IN	3 - series, Pianale piatto / Telaio	143 M/470		11.0	18.01	75.0	F-8	G
8214.600	IN	3 - series, Pianale piatto / Telaio	143 M/470		11.0	18.01	75.0	F-8	G
8214.600	IN	3 - series, Pianale piatto / Telaio	143 M/470		11.0	18.01	75.0	F-8	G
8214.600	IN	3 - series, Pianale piatto / Telaio	143 M/470		11.0	18.01	75.0	F-8	G
8214.600	IN	3 - series, Pianale piatto / Telaio	143 M/500		11.0	18.01	75.0	F-8	G
8214.600	IN	3 - series, Pianale piatto / Telaio	143 M/500		11.0	18.01	75.0	F-8	G
8214.600	IN	3 - series, Pianale piatto / Telaio	T 113 H/320		11.0	18.01	75.0	F-8	G
8214.600	IN	3 - series, Pianale piatto / Telaio	T 113 H/320		11.0	18.01	75.0	F-8	G
8214.600	IN	3 - series, Pianale piatto / Telaio	T 113 H/320		11.0	18.01	75.0	F-8	G
8214.600	IN	3 - series, Pianale piatto / Telaio	T 113 H/360		11.0	18.01	75.0	F-8	G
8214.600	IN	3 - series, Pianale piatto / Telaio	T 143 H/420		11.0	18.01	75.0	F-8	G
8214.600	IN	3 - series, Pianale piatto / Telaio	T 143 H/420		11.0	18.01	75.0	F-8	G
8214.600	IN	3 - series, Trattore per semirimorc	113 E/360		11.0	18.01	75.0	F-8	G
8214.600	IN	3 - series, Trattore per semirimorc	113 E/360		11.0	18.01	75.0	F-8	G
8214.600	IN	3 - series, Trattore per semirimorc	113 E/380		11.0	18.01	75.0	F-8	G
8214.600	IN	3 - series, Trattore per semirimorc	113 H/320		11.0	18.01	75.0	F-8	G

(D1) Internal diameter, (D2) External diameter, (B) Shape, (C) Material

VALVE GUIDES

IVT Ref.	Type	Model	Engine	OEM Ref.	D1	D2	Length	B	C
SCANIA									
8214.600	IN	3 - series, Trattore per semirimorc	113 H/320		11.0	18.01	75.0	F-8	G
8214.600	IN	3 - series, Trattore per semirimorc	113 H/320		11.0	18.01	75.0	F-8	G
8214.600	IN	3 - series, Trattore per semirimorc	113 H/320		11.0	18.01	75.0	F-8	G
8214.600	IN	3 - series, Trattore per semirimorc	113 H/320		11.0	18.01	75.0	F-8	G
8214.600	IN	3 - series, Trattore per semirimorc	113 H/320		11.0	18.01	75.0	F-8	G
8214.600	IN	3 - series, Trattore per semirimorc	113 H/360		11.0	18.01	75.0	F-8	G
8214.600	IN	3 - series, Trattore per semirimorc	113 H/360		11.0	18.01	75.0	F-8	G
8214.600	IN	3 - series, Trattore per semirimorc	113 H/360		11.0	18.01	75.0	F-8	G
8214.600	IN	3 - series, Trattore per semirimorc	113 H/360		11.0	18.01	75.0	F-8	G
8214.600	IN	3 - series, Trattore per semirimorc	113 H/360		11.0	18.01	75.0	F-8	G
8214.600	IN	3 - series, Trattore per semirimorc	113 H/360		11.0	18.01	75.0	F-8	G
8214.600	IN	3 - series, Trattore per semirimorc	113 H/380		11.0	18.01	75.0	F-8	G
8214.600	IN	3 - series, Trattore per semirimorc	113 H/380		11.0	18.01	75.0	F-8	G
8214.600	IN	3 - series, Trattore per semirimorc	113 H/380		11.0	18.01	75.0	F-8	G
8214.600	IN	3 - series, Trattore per semirimorc	113 M/320		11.0	18.01	75.0	F-8	G
8214.600	IN	3 - series, Trattore per semirimorc	113 M/320		11.0	18.01	75.0	F-8	G
8214.600	IN	3 - series, Trattore per semirimorc	113 M/320		11.0	18.01	75.0	F-8	G
8214.600	IN	3 - series, Trattore per semirimorc	113 M/320		11.0	18.01	75.0	F-8	G
8214.600	IN	3 - series, Trattore per semirimorc	113 M/320		11.0	18.01	75.0	F-8	G
8214.600	IN	3 - series, Trattore per semirimorc	113 M/360		11.0	18.01	75.0	F-8	G
8214.600	IN	3 - series, Trattore per semirimorc	113 M/360		11.0	18.01	75.0	F-8	G
8214.600	IN	3 - series, Trattore per semirimorc	113 M/360		11.0	18.01	75.0	F-8	G
8214.600	IN	3 - series, Trattore per semirimorc	113 M/360		11.0	18.01	75.0	F-8	G
8214.600	IN	3 - series, Trattore per semirimorc	113 M/380		11.0	18.01	75.0	F-8	G
8214.600	IN	3 - series, Trattore per semirimorc	113 M/380		11.0	18.01	75.0	F-8	G
8214.600	IN	3 - series, Trattore per semirimorc	113 M/400		11.0	18.01	75.0	F-8	G
8214.600	IN	3 - series, Trattore per semirimorc	143 E/420		11.0	18.01	75.0	F-8	G
8214.600	IN	3 - series, Trattore per semirimorc	143 E/450		11.0	18.01	75.0	F-8	G
8214.600	IN	3 - series, Trattore per semirimorc	143 E/500		11.0	18.01	75.0	F-8	G
8214.600	IN	3 - series, Trattore per semirimorc	143 H/400		11.0	18.01	75.0	F-8	G
8214.600	IN	3 - series, Trattore per semirimorc	143 H/400		11.0	18.01	75.0	F-8	G
8214.600	IN	3 - series, Trattore per semirimorc	143 H/400		11.0	18.01	75.0	F-8	G
8214.600	IN	3 - series, Trattore per semirimorc	143 H/400		11.0	18.01	75.0	F-8	G
8214.600	IN	3 - series, Trattore per semirimorc	143 H/400		11.0	18.01	75.0	F-8	G
8214.600	IN	3 - series, Trattore per semirimorc	143 H/400		11.0	18.01	75.0	F-8	G
8214.600	IN	3 - series, Trattore per semirimorc	143 H/420		11.0	18.01	75.0	F-8	G
8214.600	IN	3 - series, Trattore per semirimorc	143 H/420		11.0	18.01	75.0	F-8	G
8214.600	IN	3 - series, Trattore per semirimorc	143 H/420		11.0	18.01	75.0	F-8	G
8214.600	IN	3 - series, Trattore per semirimorc	143 H/450		11.0	18.01	75.0	F-8	G
8214.600	IN	3 - series, Trattore per semirimorc	143 H/450		11.0	18.01	75.0	F-8	G
8214.600	IN	3 - series, Trattore per semirimorc	143 H/450		11.0	18.01	75.0	F-8	G
8214.600	IN	3 - series, Trattore per semirimorc	143 H/450		11.0	18.01	75.0	F-8	G
8214.600	IN	3 - series, Trattore per semirimorc	143 H/450		11.0	18.01	75.0	F-8	G
8214.600	IN	3 - series, Trattore per semirimorc	143 H/450		11.0	18.01	75.0	F-8	G
8214.600	IN	3 - series, Trattore per semirimorc	143 H/470		11.0	18.01	75.0	F-8	G
8214.600	IN	3 - series, Trattore per semirimorc	143 H/470		11.0	18.01	75.0	F-8	G
8214.600	IN	3 - series, Trattore per semirimorc	143 H/470		11.0	18.01	75.0	F-8	G
8214.600	IN	3 - series, Trattore per semirimorc	143 H/470		11.0	18.01	75.0	F-8	G
8214.600	IN	3 - series, Trattore per semirimorc	143 H/500		11.0	18.01	75.0	F-8	G
8214.600	IN	3 - series, Trattore per semirimorc	143 H/500		11.0	18.01	75.0	F-8	G
8214.600	IN	3 - series, Trattore per semirimorc	143 H/500		11.0	18.01	75.0	F-8	G
8214.600	IN	3 - series, Trattore per semirimorc	143 M/420		11.0	18.01	75.0	F-8	G
8214.600	IN	3 - series, Trattore per semirimorc	143 M/420		11.0	18.01	75.0	F-8	G
8214.600	IN	3 - series, Trattore per semirimorc	143 M/450		11.0	18.01	75.0	F-8	G
8214.600	IN	3 - series, Trattore per semirimorc	143 M/450		11.0	18.01	75.0	F-8	G
8214.600	IN	3 - series, Trattore per semirimorc	143 M/450		11.0	18.01	75.0	F-8	G
8214.600	IN	3 - series, Trattore per semirimorc	143 M/450		11.0	18.01	75.0	F-8	G
8214.600	IN	3 - series, Trattore per semirimorc	143 M/470		11.0	18.01	75.0	F-8	G
8214.600	IN	3 - series, Trattore per semirimorc	143 M/470		11.0	18.01	75.0	F-8	G
8214.600	IN	3 - series, Trattore per semirimorc	143 M/470		11.0	18.01	75.0	F-8	G
8214.600	IN	3 - series, Trattore per semirimorc	143 M/470		11.0	18.01	75.0	F-8	G
8214.600	IN	3 - series, Trattore per semirimorc	143 M/500		11.0	18.01	75.0	F-8	G

(D1) Internal diameter, (D2) External diameter, (B) Shape, (C) Material

VALVE GUIDES

SCANIA

IVT Ref.	Type	Model	Engine	OEM Ref.	D1	D2	Length	B	C
8214.600	IN	3 - series, Trattore per semirimorc	143 M/500		11.0	18.01	75.0	F-8	G
8214.600	IN	3 - series, Trattore per semirimorc	T 113 E/360		11.0	18.01	75.0	F-8	G
8214.600	IN	3 - series, Trattore per semirimorc	T 113 E/360		11.0	18.01	75.0	F-8	G
8214.600	IN	3 - series, Trattore per semirimorc	T 113 H/320		11.0	18.01	75.0	F-8	G
8214.600	IN	3 - series, Trattore per semirimorc	T 113 H/320		11.0	18.01	75.0	F-8	G
8214.600	IN	3 - series, Trattore per semirimorc	T 113 H/320		11.0	18.01	75.0	F-8	G
8214.600	IN	3 - series, Trattore per semirimorc	T 113 H/360		11.0	18.01	75.0	F-8	G
8214.600	IN	3 - series, Trattore per semirimorc	T 113 H/360		11.0	18.01	75.0	F-8	G
8214.600	IN	3 - series, Trattore per semirimorc	T 113 H/360		11.0	18.01	75.0	F-8	G
8214.600	IN	3 - series, Trattore per semirimorc	T 143 E/420		11.0	18.01	75.0	F-8	G
8214.600	IN	3 - series, Trattore per semirimorc	T 143 E/450		11.0	18.01	75.0	F-8	G
8214.600	IN	3 - series, Trattore per semirimorc	T 143 E/500		11.0	18.01	75.0	F-8	G
8214.600	IN	3 - series, Trattore per semirimorc	T 143 H/420		11.0	18.01	75.0	F-8	G
8214.600	IN	3 - series, Trattore per semirimorc	T 143 H/420		11.0	18.01	75.0	F-8	G
8214.600	IN	3 - series, Trattore per semirimorc	T 143 H/450		11.0	18.01	75.0	F-8	G
8214.600	IN	3 - series, Trattore per semirimorc	T 143 H/450		11.0	18.01	75.0	F-8	G
8214.600	IN	3 - series, Trattore per semirimorc	T 143 H/500		11.0	18.01	75.0	F-8	G
8214.600	IN	3 - series, Trattore per semirimorc	T 143 H/500		11.0	18.01	75.0	F-8	G
8214.600	IN	4 - series, Cassone ribaltabile	144 C/460		11.0	18.01	75.0	F-8	G
8214.600	IN	4 - series, Cassone ribaltabile	144 C/530		11.0	18.01	75.0	F-8	G
8214.600	IN	4 - series, Cassone ribaltabile	144 C/530		11.0	18.01	75.0	F-8	G
8214.600	IN	4 - series, Pianale piatto / Telaio	144 C/530		11.0	18.01	75.0	F-8	G
8214.600	IN	4 - series, Pianale piatto / Telaio	144 C/530		11.0	18.01	75.0	F-8	G
8214.600	IN	4 - series, Pianale piatto / Telaio	144 G/460		11.0	18.01	75.0	F-8	G
8214.600	IN	4 - series, Pianale piatto / Telaio	144 G/460		11.0	18.01	75.0	F-8	G
8214.600	IN	4 - series, Pianale piatto / Telaio	144 G/460		11.0	18.01	75.0	F-8	G
8214.600	IN	4 - series, Pianale piatto / Telaio	144 G/460		11.0	18.01	75.0	F-8	G
8214.600	IN	4 - series, Pianale piatto / Telaio	144 G/460		11.0	18.01	75.0	F-8	G
8214.600	IN	4 - series, Pianale piatto / Telaio	144 G/530		11.0	18.01	75.0	F-8	G
8214.600	IN	4 - series, Pianale piatto / Telaio	144 G/530		11.0	18.01	75.0	F-8	G
8214.600	IN	4 - series, Pianale piatto / Telaio	144 G/530		11.0	18.01	75.0	F-8	G
8214.600	IN	4 - series, Pianale piatto / Telaio	144 G/530		11.0	18.01	75.0	F-8	G
8214.600	IN	4 - series, Pianale piatto / Telaio	144 G/530		11.0	18.01	75.0	F-8	G
8214.600	IN	4 - series, Pianale piatto / Telaio	144 L/460		11.0	18.01	75.0	F-8	G
8214.600	IN	4 - series, Pianale piatto / Telaio	144 L/460		11.0	18.01	75.0	F-8	G
8214.600	IN	4 - series, Pianale piatto / Telaio	144 L/460		11.0	18.01	75.0	F-8	G
8214.600	IN	4 - series, Pianale piatto / Telaio	144 L/460		11.0	18.01	75.0	F-8	G
8214.600	IN	4 - series, Pianale piatto / Telaio	144 L/530		11.0	18.01	75.0	F-8	G
8214.600	IN	4 - series, Pianale piatto / Telaio	144 L/530		11.0	18.01	75.0	F-8	G
8214.600	IN	4 - series, Pianale piatto / Telaio	144 L/530		11.0	18.01	75.0	F-8	G
8214.600	IN	4 - series, Pianale piatto / Telaio	144 L/530		11.0	18.01	75.0	F-8	G
8214.600	IN	4 - series, Pianale piatto / Telaio	T 144 C/460		11.0	18.01	75.0	F-8	G
8214.600	IN	4 - series, Pianale piatto / Telaio	T 144 C/460		11.0	18.01	75.0	F-8	G
8214.600	IN	4 - series, Pianale piatto / Telaio	T 144 C/530		11.0	18.01	75.0	F-8	G
8214.600	IN	4 - series, Pianale piatto / Telaio	T 144 C/530		11.0	18.01	75.0	F-8	G
8214.600	IN	4 - series, Pianale piatto / Telaio	T 144 G/460		11.0	18.01	75.0	F-8	G
8214.600	IN	4 - series, Pianale piatto / Telaio	T 144 G/460		11.0	18.01	75.0	F-8	G
8214.600	IN	4 - series, Pianale piatto / Telaio	T 144 G/460		11.0	18.01	75.0	F-8	G
8214.600	IN	4 - series, Pianale piatto / Telaio	T 144 G/530		11.0	18.01	75.0	F-8	G
8214.600	IN	4 - series, Pianale piatto / Telaio	T 144 G/530		11.0	18.01	75.0	F-8	G
8214.600	IN	4 - series, Pianale piatto / Telaio	T 144 G/530		11.0	18.01	75.0	F-8	G
8214.600	IN	4 - series, Trattore per semirimorc	144 C/530		11.0	18.01	75.0	F-8	G
8214.600	IN	4 - series, Trattore per semirimorc	144 C/530		11.0	18.01	75.0	F-8	G
8214.600	IN	4 - series, Trattore per semirimorc	144 G/460		11.0	18.01	75.0	F-8	G
8214.600	IN	4 - series, Trattore per semirimorc	144 G/460		11.0	18.01	75.0	F-8	G
8214.600	IN	4 - series, Trattore per semirimorc	144 G/460		11.0	18.01	75.0	F-8	G
8214.600	IN	4 - series, Trattore per semirimorc	144 G/530		11.0	18.01	75.0	F-8	G
8214.600	IN	4 - series, Trattore per semirimorc	144 G/530		11.0	18.01	75.0	F-8	G
8214.600	IN	4 - series, Trattore per semirimorc	144 G/530		11.0	18.01	75.0	F-8	G
8214.600	IN	4 - series, Trattore per semirimorc	144 L/460		11.0	18.01	75.0	F-8	G
8214.600	IN	4 - series, Trattore per semirimorc	144 L/460		11.0	18.01	75.0	F-8	G
8214.600	IN	4 - series, Trattore per semirimorc	144 L/460		11.0	18.01	75.0	F-8	G

(D1) Internal diameter, (D2) External diameter, (B) Shape, (C) Material

VALVE GUIDES

IVT Ref.	Type	Model	Engine	OEM Ref.	D1	D2	Length	B	C
SCANIA									
8214.600	IN	4 - series, Trattore per semirimorc	144 L/530		11.0	18.01	75.0	F-8	G
8214.600	IN	4 - series, Trattore per semirimorc	144 L/530		11.0	18.01	75.0	F-8	G
8214.600	IN	4 - series, Trattore per semirimorc	144 L/530		11.0	18.01	75.0	F-8	G
8214.600	IN	4 - series, Trattore per semirimorc	T 144 C/460		11.0	18.01	75.0	F-8	G
8214.600	IN	4 - series, Trattore per semirimorc	T 144 C/460		11.0	18.01	75.0	F-8	G
8214.600	IN	4 - series, Trattore per semirimorc	T 144 C/530		11.0	18.01	75.0	F-8	G
8214.600	IN	4 - series, Trattore per semirimorc	T 144 C/530		11.0	18.01	75.0	F-8	G
8214.600	IN	4 - series, Trattore per semirimorc	T 144 G/460		11.0	18.01	75.0	F-8	G
8214.600	IN	4 - series, Trattore per semirimorc	T 144 G/460		11.0	18.01	75.0	F-8	G
8214.600	IN	4 - series, Trattore per semirimorc	T 144 G/460		11.0	18.01	75.0	F-8	G
8214.600	IN	4 - series, Trattore per semirimorc	T 144 G/530		11.0	18.01	75.0	F-8	G
8214.600	IN	4 - series, Trattore per semirimorc	T 144 G/530		11.0	18.01	75.0	F-8	G
8214.600	IN	4 - series, Trattore per semirimorc	T 144 G/530		11.0	18.01	75.0	F-8	G
8214.600	IN	4 - series, Trattore per semirimorc	T 144 L/460		11.0	18.01	75.0	F-8	G
8214.600	IN	4 - series, Trattore per semirimorc	T 144 L/460		11.0	18.01	75.0	F-8	G
8214.600	IN	4 - series, Trattore per semirimorc	T 144 L/460		11.0	18.01	75.0	F-8	G
8214.600	IN	4 - series, Trattore per semirimorc	T 144 L/460		11.0	18.01	75.0	F-8	G
8214.600	IN	4 - series, Trattore per semirimorc	T 144 L/530		11.0	18.01	75.0	F-8	G
8214.600	IN	4 - series, Trattore per semirimorc	T 144 L/530		11.0	18.01	75.0	F-8	G
8214.600	IN	4 - series, Trattore per semirimorc	T 144 L/530		11.0	18.01	75.0	F-8	G
8214.600	IN	4 - series, Trattore per semirimorc	T 144 L/530		11.0	18.01	75.0	F-8	G
8189.100	IN	92 H/245, 2 - series - Pianale piatt	-	1523410	11.0	18.01	80.0	A-8	G
8190.100	EX	92 H/245, 2 - series - Pianale piatt	-	1523410	11.0	18.01	73.0	A-8	G
8189.100	IN	92 H/245, 2 - series - Pianale piatt	-	1523410	11.0	18.01	80.0	A-8	G
8190.100	EX	92 H/245, 2 - series - Pianale piatt	-	1523410	11.0	18.01	73.0	A-8	G
8189.100	IN	92 H/245, 2 - series - Pianale piatt	-	300957	11.0	18.01	80.0	A-8	G
8189.100	IN	92 H/245, 2 - series - Pianale piatt	-	300957	11.0	18.01	80.0	A-8	G
8190.100	EX	92 H/245, 2 - series - Pianale piatt	-	300957	11.0	18.01	73.0	A-8	G
8190.100	EX	92 H/245, 2 - series - Pianale piatt	-	300957	11.0	18.01	73.0	A-8	G
8189.100	IN	92 H/275, 2 - series - Pianale piatt	-	1523410	11.0	18.01	80.0	A-8	G
8190.100	EX	92 H/275, 2 - series - Pianale piatt	-	1523410	11.0	18.01	73.0	A-8	G
8190.100	EX	92 H/275, 2 - series - Pianale piatt	-	1523410	11.0	18.01	73.0	A-8	G
8189.100	IN	92 H/275, 2 - series - Pianale piatt	-	1523410	11.0	18.01	80.0	A-8	G
8189.100	IN	92 H/275, 2 - series - Pianale piatt	-	300957	11.0	18.01	80.0	A-8	G
8189.100	IN	92 H/275, 2 - series - Pianale piatt	-	300957	11.0	18.01	80.0	A-8	G
8190.100	EX	92 H/275, 2 - series - Pianale piatt	-	300957	11.0	18.01	73.0	A-8	G
8190.100	EX	92 H/275, 2 - series - Pianale piatt	-	300957	11.0	18.01	73.0	A-8	G
8190.100	EX	92 M/245, 2 - series - Pianale piatt	-	1523410	11.0	18.01	73.0	A-8	G
8190.100	EX	92 M/245, 2 - series - Pianale piatt	-	1523410	11.0	18.01	73.0	A-8	G
8190.100	EX	92 M/245, 2 - series - Pianale piatt	-	1523410	11.0	18.01	73.0	A-8	G
8189.100	IN	92 M/245, 2 - series - Pianale piatt	-	1523410	11.0	18.01	80.0	A-8	G
8189.100	IN	92 M/245, 2 - series - Pianale piatt	-	1523410	11.0	18.01	80.0	A-8	G
8189.100	IN	92 M/245, 2 - series - Pianale piatt	-	1523410	11.0	18.01	80.0	A-8	G
8189.100	IN	92 M/245, 2 - series - Pianale piatt	-	1523410	11.0	18.01	80.0	A-8	G
8190.100	EX	92 M/245, 2 - series - Pianale piatt	-	1523410	11.0	18.01	73.0	A-8	G
8190.100	EX	92 M/245, 2 - series - Pianale piatt	-	300957	11.0	18.01	73.0	A-8	G
8189.100	IN	92 M/245, 2 - series - Pianale piatt	-	300957	11.0	18.01	80.0	A-8	G
8190.100	EX	92 M/245, 2 - series - Pianale piatt	-	300957	11.0	18.01	73.0	A-8	G
8189.100	IN	92 M/245, 2 - series - Pianale piatt	-	300957	11.0	18.01	80.0	A-8	G
8190.100	EX	92 M/245, 2 - series - Pianale piatt	-	300957	11.0	18.01	73.0	A-8	G
8190.100	EX	92 M/245, 2 - series - Pianale piatt	-	300957	11.0	18.01	73.0	A-8	G
8189.100	IN	92 M/245, 2 - series - Pianale piatt	-	300957	11.0	18.01	80.0	A-8	G
8189.100	IN	92 M/245, 2 - series - Pianale piatt	-	300957	11.0	18.01	80.0	A-8	G
8190.100	EX	92 M/245, 2 - series - Trattore per	-	1523410	11.0	18.01	73.0	A-8	G
8189.100	IN	92 M/245, 2 - series - Trattore per	-	1523410	11.0	18.01	80.0	A-8	G
8189.100	IN	92 M/245, 2 - series - Trattore per	-	1523410	11.0	18.01	80.0	A-8	G
8190.100	EX	92 M/245, 2 - series - Trattore per	-	1523410	11.0	18.01	73.0	A-8	G
8190.100	EX	92 M/245, 2 - series - Trattore per	-	300957	11.0	18.01	73.0	A-8	G
8190.100	EX	92 M/245, 2 - series - Trattore per	-	300957	11.0	18.01	73.0	A-8	G
8189.100	IN	92 M/245, 2 - series - Trattore per	-	300957	11.0	18.01	80.0	A-8	G
8189.100	IN	92 M/245, 2 - series - Trattore per	-	300957	11.0	18.01	80.0	A-8	G
8189.100	IN	92 M/275, 2 - series - Pianale piatt	-	1523410	11.0	18.01	80.0	A-8	G

(D1) Internal diameter, (D2) External diameter, (B) Shape, (C) Material

VALVE GUIDES

IVT Ref.	Type	Model	Engine	OEM Ref.	D1	D2	Length	B	C
SCANIA									
8190.100	EX	92 M/275, 2 - series - Pianale piatt	-	1523410	11.0	18.01	73.0	A-8	G
8190.100	EX	92 M/275, 2 - series - Pianale piatt	-	1523410	11.0	18.01	73.0	A-8	G
8190.100	EX	92 M/275, 2 - series - Pianale piatt	-	1523410	11.0	18.01	73.0	A-8	G
8189.100	IN	92 M/275, 2 - series - Pianale piatt	-	1523410	11.0	18.01	80.0	A-8	G
8189.100	IN	92 M/275, 2 - series - Pianale piatt	-	1523410	11.0	18.01	80.0	A-8	G
8189.100	IN	92 M/275, 2 - series - Pianale piatt	-	1523410	11.0	18.01	80.0	A-8	G
8190.100	EX	92 M/275, 2 - series - Pianale piatt	-	1523410	11.0	18.01	73.0	A-8	G
8189.100	IN	92 M/275, 2 - series - Pianale piatt	-	300957	11.0	18.01	80.0	A-8	G
8189.100	IN	92 M/275, 2 - series - Pianale piatt	-	300957	11.0	18.01	80.0	A-8	G
8189.100	IN	92 M/275, 2 - series - Pianale piatt	-	300957	11.0	18.01	80.0	A-8	G
8190.100	EX	92 M/275, 2 - series - Pianale piatt	-	300957	11.0	18.01	73.0	A-8	G
8190.100	EX	92 M/275, 2 - series - Pianale piatt	-	300957	11.0	18.01	73.0	A-8	G
8190.100	EX	92 M/275, 2 - series - Pianale piatt	-	300957	11.0	18.01	73.0	A-8	G
8190.100	EX	92 M/275, 2 - series - Pianale piatt	-	300957	11.0	18.01	73.0	A-8	G
8189.100	IN	92 M/275, 2 - series - Pianale piatt	-	300957	11.0	18.01	80.0	A-8	G
8189.100	IN	92 M/275, 2 - series - Trattore per	-	1523410	11.0	18.01	80.0	A-8	G
8190.100	EX	92 M/275, 2 - series - Trattore per	-	1523410	11.0	18.01	73.0	A-8	G
8190.100	EX	92 M/275, 2 - series - Trattore per	-	1523410	11.0	18.01	73.0	A-8	G
8189.100	IN	92 M/275, 2 - series - Trattore per	-	1523410	11.0	18.01	80.0	A-8	G
8190.100	EX	92 M/275, 2 - series - Trattore per	-	300957	11.0	18.01	73.0	A-8	G
8189.100	IN	92 M/275, 2 - series - Trattore per	-	300957	11.0	18.01	80.0	A-8	G
8190.100	EX	92 M/275, 2 - series - Trattore per	-	300957	11.0	18.01	73.0	A-8	G
8189.100	IN	92 M/275, 2 - series - Trattore per	-	300957	11.0	18.01	80.0	A-8	G
8190.100	EX	93 H/220 , 3 - series - Pianale piatt	-	1523410	11.0	18.01	73.0	A-8	G
8189.100	IN	93 H/220 , 3 - series - Pianale piatt	-	1523410	11.0	18.01	80.0	A-8	G
8190.100	EX	93 H/220 , 3 - series - Pianale piatt	-	300957	11.0	18.01	73.0	A-8	G
8189.100	IN	93 H/220 , 3 - series - Pianale piatt	-	300957	11.0	18.01	80.0	A-8	G
8190.100	EX	93 H/280, 3 - series - Betoniera	-	1523410	11.0	18.01	73.0	A-8	G
8189.100	IN	93 H/280, 3 - series - Betoniera	-	1523410	11.0	18.01	80.0	A-8	G
8190.100	EX	93 H/280, 3 - series - Betoniera	-	300957	11.0	18.01	73.0	A-8	G
8189.100	IN	93 H/280, 3 - series - Betoniera	-	300957	11.0	18.01	80.0	A-8	G
8190.100	EX	93 H/280, 3 - series - Cassone rib	-	1523410	11.0	18.01	73.0	A-8	G
8190.100	EX	93 H/280, 3 - series - Cassone rib	-	1523410	11.0	18.01	73.0	A-8	G
8189.100	IN	93 H/280, 3 - series - Cassone rib	-	1523410	11.0	18.01	80.0	A-8	G
8189.100	IN	93 H/280, 3 - series - Cassone rib	-	1523410	11.0	18.01	80.0	A-8	G
8190.100	EX	93 H/280, 3 - series - Cassone rib	-	300957	11.0	18.01	73.0	A-8	G
8190.100	EX	93 H/280, 3 - series - Cassone rib	-	300957	11.0	18.01	73.0	A-8	G
8189.100	IN	93 H/280, 3 - series - Cassone rib	-	300957	11.0	18.01	80.0	A-8	G
8189.100	IN	93 H/280, 3 - series - Cassone rib	-	300957	11.0	18.01	80.0	A-8	G
8190.100	EX	93 H/280, 3 - series - Pianale piatt	-	1523410	11.0	18.01	73.0	A-8	G
8189.100	IN	93 H/280, 3 - series - Pianale piatt	-	1523410	11.0	18.01	80.0	A-8	G
8190.100	EX	93 H/280, 3 - series - Pianale piatt	-	1523410	11.0	18.01	73.0	A-8	G
8189.100	IN	93 H/280, 3 - series - Pianale piatt	-	1523410	11.0	18.01	80.0	A-8	G
8190.100	EX	93 H/280, 3 - series - Pianale piatt	-	300957	11.0	18.01	73.0	A-8	G
8189.100	IN	93 H/280, 3 - series - Pianale piatt	-	300957	11.0	18.01	80.0	A-8	G
8189.100	IN	93 H/280, 3 - series - Pianale piatt	-	300957	11.0	18.01	80.0	A-8	G
8190.100	EX	93 H/280, 3 - series - Pianale piatt	-	300957	11.0	18.01	73.0	A-8	G
8190.100	EX	93 M/210, 3 - series - Pianale piatt	-	1523410	11.0	18.01	73.0	A-8	G
8189.100	IN	93 M/210, 3 - series - Pianale piatt	-	1523410	11.0	18.01	80.0	A-8	G
8190.100	EX	93 M/210, 3 - series - Pianale piatt	-	300957	11.0	18.01	73.0	A-8	G
8189.100	IN	93 M/210, 3 - series - Pianale piatt	-	300957	11.0	18.01	80.0	A-8	G
8190.100	EX	93 M/220, 3 - series - Pianale piatt	-	1523410	11.0	18.01	73.0	A-8	G
8190.100	EX	93 M/220, 3 - series - Pianale piatt	-	1523410	11.0	18.01	73.0	A-8	G
8189.100	IN	93 M/220, 3 - series - Pianale piatt	-	1523410	11.0	18.01	80.0	A-8	G
8189.100	IN	93 M/220, 3 - series - Pianale piatt	-	1523410	11.0	18.01	80.0	A-8	G
8190.100	EX	93 M/220, 3 - series - Pianale piatt	-	300957	11.0	18.01	73.0	A-8	G
8189.100	IN	93 M/220, 3 - series - Pianale piatt	-	300957	11.0	18.01	80.0	A-8	G
8189.100	IN	93 M/220, 3 - series - Pianale piatt	-	300957	11.0	18.01	80.0	A-8	G
8190.100	EX	93 M/220, 3 - series - Pianale piatt	-	300957	11.0	18.01	73.0	A-8	G
8190.100	EX	93 M/220, 3 - series - Trattore per	-	1523410	11.0	18.01	73.0	A-8	G
8189.100	IN	93 M/220, 3 - series - Trattore per	-	1523410	11.0	18.01	80.0	A-8	G
8190.100	EX	93 M/220, 3 - series - Trattore per	-	300957	11.0	18.01	73.0	A-8	G

(D1) Internal diameter, (D2) External diameter, (B) Shape, (C) Material

VALVE GUIDES

IVT Ref.	Type	Model	Engine	OEM Ref.	D1	D2	Length	B	C
SCANIA									
8189.100	IN	93 M/220, 3 - series - Trattore per	-	300957	11.0	18.01	80.0	A-8	G
8190.100	EX	93 M/230, 3 - series - Pianale piatt	-	1523410	11.0	18.01	73.0	A-8	G
8190.100	EX	93 M/230, 3 - series - Pianale piatt	-	1523410	11.0	18.01	73.0	A-8	G
8190.100	EX	93 M/230, 3 - series - Pianale piatt	-	1523410	11.0	18.01	73.0	A-8	G
8189.100	IN	93 M/230, 3 - series - Pianale piatt	-	1523410	11.0	18.01	80.0	A-8	G
8189.100	IN	93 M/230, 3 - series - Pianale piatt	-	1523410	11.0	18.01	80.0	A-8	G
8189.100	IN	93 M/230, 3 - series - Pianale piatt	-	1523410	11.0	18.01	80.0	A-8	G
8189.100	IN	93 M/230, 3 - series - Pianale piatt	-	1523410	11.0	18.01	80.0	A-8	G
8190.100	EX	93 M/230, 3 - series - Pianale piatt	-	1523410	11.0	18.01	73.0	A-8	G
8189.100	IN	93 M/230, 3 - series - Pianale piatt	-	300957	11.0	18.01	80.0	A-8	G
8189.100	IN	93 M/230, 3 - series - Pianale piatt	-	300957	11.0	18.01	80.0	A-8	G
8189.100	IN	93 M/230, 3 - series - Pianale piatt	-	300957	11.0	18.01	80.0	A-8	G
8189.100	IN	93 M/230, 3 - series - Pianale piatt	-	300957	11.0	18.01	80.0	A-8	G
8190.100	EX	93 M/230, 3 - series - Pianale piatt	-	300957	11.0	18.01	73.0	A-8	G
8190.100	EX	93 M/230, 3 - series - Pianale piatt	-	300957	11.0	18.01	73.0	A-8	G
8190.100	EX	93 M/230, 3 - series - Pianale piatt	-	300957	11.0	18.01	73.0	A-8	G
8190.100	EX	93 M/230, 3 - series - Pianale piatt	-	300957	11.0	18.01	73.0	A-8	G
8189.100	IN	93 M/230, 3 - series - Trattore per	-	1523410	11.0	18.01	80.0	A-8	G
8190.100	EX	93 M/230, 3 - series - Trattore per	-	1523410	11.0	18.01	73.0	A-8	G
8190.100	EX	93 M/230, 3 - series - Trattore per	-	1523410	11.0	18.01	73.0	A-8	G
8189.100	IN	93 M/230, 3 - series - Trattore per	-	1523410	11.0	18.01	80.0	A-8	G
8190.100	EX	93 M/230, 3 - series - Trattore per	-	300957	11.0	18.01	73.0	A-8	G
8189.100	IN	93 M/230, 3 - series - Trattore per	-	300957	11.0	18.01	80.0	A-8	G
8190.100	EX	93 M/230, 3 - series - Trattore per	-	300957	11.0	18.01	73.0	A-8	G
8189.100	IN	93 M/230, 3 - series - Trattore per	-	300957	11.0	18.01	80.0	A-8	G
8190.100	EX	93 M/280, 3 - series - Betoniera	-	1523410	11.0	18.01	73.0	A-8	G
8189.100	IN	93 M/280, 3 - series - Betoniera	-	1523410	11.0	18.01	80.0	A-8	G
8190.100	EX	93 M/280, 3 - series - Betoniera	-	300957	11.0	18.01	73.0	A-8	G
8189.100	IN	93 M/280, 3 - series - Betoniera	-	300957	11.0	18.01	80.0	A-8	G
8190.100	EX	93 M/280, 3 - series - Cassone rib	-	1523410	11.0	18.01	73.0	A-8	G
8189.100	IN	93 M/280, 3 - series - Cassone rib	-	1523410	11.0	18.01	80.0	A-8	G
8190.100	EX	93 M/280, 3 - series - Cassone rib	-	300957	11.0	18.01	73.0	A-8	G
8189.100	IN	93 M/280, 3 - series - Cassone rib	-	300957	11.0	18.01	80.0	A-8	G
8190.100	EX	93 M/280, 3 - series - Pianale piatt	-	1523410	11.0	18.01	73.0	A-8	G
8190.100	EX	93 M/280, 3 - series - Pianale piatt	-	1523410	11.0	18.01	73.0	A-8	G
8190.100	EX	93 M/280, 3 - series - Pianale piatt	-	1523410	11.0	18.01	73.0	A-8	G
8190.100	EX	93 M/280, 3 - series - Pianale piatt	-	1523410	11.0	18.01	73.0	A-8	G
8189.100	IN	93 M/280, 3 - series - Pianale piatt	-	1523410	11.0	18.01	80.0	A-8	G
8189.100	IN	93 M/280, 3 - series - Pianale piatt	-	1523410	11.0	18.01	80.0	A-8	G
8189.100	IN	93 M/280, 3 - series - Pianale piatt	-	1523410	11.0	18.01	80.0	A-8	G
8189.100	IN	93 M/280, 3 - series - Pianale piatt	-	1523410	11.0	18.01	80.0	A-8	G
8189.100	IN	93 M/280, 3 - series - Pianale piatt	-	1523410	11.0	18.01	80.0	A-8	G
8190.100	EX	93 M/280, 3 - series - Pianale piatt	-	1523410	11.0	18.01	73.0	A-8	G
8190.100	EX	93 M/280, 3 - series - Pianale piatt	-	300957	11.0	18.01	73.0	A-8	G
8190.100	EX	93 M/280, 3 - series - Pianale piatt	-	300957	11.0	18.01	73.0	A-8	G
8190.100	EX	93 M/280, 3 - series - Pianale piatt	-	300957	11.0	18.01	73.0	A-8	G
8190.100	EX	93 M/280, 3 - series - Pianale piatt	-	300957	11.0	18.01	73.0	A-8	G
8189.100	IN	93 M/280, 3 - series - Pianale piatt	-	300957	11.0	18.01	80.0	A-8	G
8189.100	IN	93 M/280, 3 - series - Pianale piatt	-	300957	11.0	18.01	80.0	A-8	G
8189.100	IN	93 M/280, 3 - series - Pianale piatt	-	300957	11.0	18.01	80.0	A-8	G
8189.100	IN	93 M/280, 3 - series - Pianale piatt	-	300957	11.0	18.01	80.0	A-8	G
8189.100	IN	93 M/280, 3 - series - Pianale piatt	-	300957	11.0	18.01	80.0	A-8	G
8190.100	EX	93 M/280, 3 - series - Pianale piatt	-	300957	11.0	18.01	73.0	A-8	G
8190.100	EX	93 M/280, 3 - series - Trattore per	-	1523410	11.0	18.01	73.0	A-8	G
8190.100	EX	93 M/280, 3 - series - Trattore per	-	1523410	11.0	18.01	73.0	A-8	G
8189.100	IN	93 M/280, 3 - series - Trattore per	-	1523410	11.0	18.01	80.0	A-8	G
8189.100	IN	93 M/280, 3 - series - Trattore per	-	1523410	11.0	18.01	80.0	A-8	G
8190.100	EX	93 M/280, 3 - series - Trattore per	-	300957	11.0	18.01	73.0	A-8	G
8189.100	IN	93 M/280, 3 - series - Trattore per	-	300957	11.0	18.01	80.0	A-8	G
8189.100	IN	93 M/280, 3 - series - Trattore per	-	300957	11.0	18.01	80.0	A-8	G
8190.100	EX	93 M/280, 3 - series - Trattore per	-	300957	11.0	18.01	73.0	A-8	G
8190.100	EX	K 113 CLB, 3 - series bus - Bus	-	1523410	11.0	18.01	73.0	A-8	G

(D1) Internal diameter, (D2) External diameter, (B) Shape, (C) Material

VALVE GUIDES

IVT Ref.	Type	Model	Engine	OEM Ref.	D1	D2	Length	B	C
SCANIA									
8189.100	IN	K 113 CLB, 3 - series bus - Bus	-	1523410	11.0	18.01	80.0	A-8	G
8190.100	EX	K 113 CLB, 3 - series bus - Bus	-	300957	11.0	18.01	73.0	A-8	G
8189.100	IN	K 113 CLB, 3 - series bus - Bus	-	300957	11.0	18.01	80.0	A-8	G
8190.100	EX	K 113, 3 - series bus - Bus	-	1523410	11.0	18.01	73.0	A-8	G
8189.100	IN	K 113, 3 - series bus - Bus	-	1523410	11.0	18.01	80.0	A-8	G
8190.100	EX	K 113, 3 - series bus - Bus	-	300957	11.0	18.01	73.0	A-8	G
8189.100	IN	K 113, 3 - series bus - Bus	-	300957	11.0	18.01	80.0	A-8	G
8190.100	EX	K 93 CL, 3 - series bus - Bus	-	1523410	11.0	18.01	73.0	A-8	G
8189.100	IN	K 93 CL, 3 - series bus - Bus	-	1523410	11.0	18.01	80.0	A-8	G
8190.100	EX	K 93 CL, 3 - series bus - Bus	-	300957	11.0	18.01	73.0	A-8	G
8189.100	IN	K 93 CL, 3 - series bus - Bus	-	300957	11.0	18.01	80.0	A-8	G
8190.100	EX	L 113 CLB, 3 - series bus - Bus	-	1523410	11.0	18.01	73.0	A-8	G
8190.100	EX	L 113 CLB, 3 - series bus - Bus	-	1523410	11.0	18.01	73.0	A-8	G
8189.100	IN	L 113 CLB, 3 - series bus - Bus	-	1523410	11.0	18.01	80.0	A-8	G
8189.100	IN	L 113 CLB, 3 - series bus - Bus	-	1523410	11.0	18.01	80.0	A-8	G
8190.100	EX	L 113 CLB, 3 - series bus - Bus	-	300957	11.0	18.01	73.0	A-8	G
8189.100	IN	L 113 CLB, 3 - series bus - Bus	-	300957	11.0	18.01	80.0	A-8	G
8189.100	IN	L 113 CLB, 3 - series bus - Bus	-	300957	11.0	18.01	80.0	A-8	G
8190.100	EX	L 113 CLB, 3 - series bus - Bus	-	300957	11.0	18.01	73.0	A-8	G
8191.600	IN-EX	T 113 E/320, 3 - series - Cassone	-	1403823	10.0	16.01	73.0	F-8	G
8190.100	EX	T 113 E/320, 3 - series - Cassone	-	1523410	11.0	18.01	73.0	A-8	G
8189.100	IN	T 113 E/320, 3 - series - Cassone	-	1523410	11.0	18.01	80.0	A-8	G
8191.600	IN-EX	T 113 E/320, 3 - series - Cassone	-	1940008	10.0	16.01	73.0	F-8	G
8190.100	EX	T 113 E/320, 3 - series - Cassone	-	300957	11.0	18.01	73.0	A-8	G
8189.100	IN	T 113 E/320, 3 - series - Cassone	-	300957	11.0	18.01	80.0	A-8	G
8191.600	IN-EX	T 113 E/320, 3 - series - Pianale pi	-	1403823	10.0	16.01	73.0	F-8	G
8190.100	EX	T 113 E/320, 3 - series - Pianale pi	-	1523410	11.0	18.01	73.0	A-8	G
8189.100	IN	T 113 E/320, 3 - series - Pianale pi	-	1523410	11.0	18.01	80.0	A-8	G
8191.600	IN-EX	T 113 E/320, 3 - series - Pianale pi	-	1940008	10.0	16.01	73.0	F-8	G
8190.100	EX	T 113 E/320, 3 - series - Pianale pi	-	300957	11.0	18.01	73.0	A-8	G
8189.100	IN	T 113 E/320, 3 - series - Pianale pi	-	300957	11.0	18.01	80.0	A-8	G
8191.600	IN-EX	T 113 E/360, 3 - series - Cassone	-	1403823	10.0	16.01	73.0	F-8	G
8190.100	EX	T 113 E/360, 3 - series - Cassone	-	1523410	11.0	18.01	73.0	A-8	G
8189.100	IN	T 113 E/360, 3 - series - Cassone	-	1523410	11.0	18.01	80.0	A-8	G
8191.600	IN-EX	T 113 E/360, 3 - series - Cassone	-	1940008	10.0	16.01	73.0	F-8	G
8190.100	EX	T 113 E/360, 3 - series - Cassone	-	300957	11.0	18.01	73.0	A-8	G
8189.100	IN	T 113 E/360, 3 - series - Cassone	-	300957	11.0	18.01	80.0	A-8	G
8191.600	IN-EX	T 113 E/360, 3 - series - Trattore p	-	1403823	10.0	16.01	73.0	F-8	G
8190.100	EX	T 113 E/360, 3 - series - Trattore p	-	1523410	11.0	18.01	73.0	A-8	G
8189.100	IN	T 113 E/360, 3 - series - Trattore p	-	1523410	11.0	18.01	80.0	A-8	G
8191.600	IN-EX	T 113 E/360, 3 - series - Trattore p	-	1940008	10.0	16.01	73.0	F-8	G
8190.100	EX	T 113 E/360, 3 - series - Trattore p	-	300957	11.0	18.01	73.0	A-8	G
8189.100	IN	T 113 E/360, 3 - series - Trattore p	-	300957	11.0	18.01	80.0	A-8	G
8191.600	IN-EX	T 113 H/320, 3 - series - Cassone	-	1403823	10.0	16.01	73.0	F-8	G
8190.100	EX	T 113 H/320, 3 - series - Cassone	-	1523410	11.0	18.01	73.0	A-8	G
8189.100	IN	T 113 H/320, 3 - series - Cassone	-	1523410	11.0	18.01	80.0	A-8	G
8191.600	IN-EX	T 113 H/320, 3 - series - Cassone	-	1940008	10.0	16.01	73.0	F-8	G
8190.100	EX	T 113 H/320, 3 - series - Cassone	-	300957	11.0	18.01	73.0	A-8	G
8189.100	IN	T 113 H/320, 3 - series - Cassone	-	300957	11.0	18.01	80.0	A-8	G
8191.600	IN-EX	T 113 H/320, 3 - series - Pianale pi	-	1403823	10.0	16.01	73.0	F-8	G
8191.600	IN-EX	T 113 H/320, 3 - series - Pianale pi	-	1403823	10.0	16.01	73.0	F-8	G
8191.600	IN-EX	T 113 H/320, 3 - series - Pianale pi	-	1403823	10.0	16.01	73.0	F-8	G
8190.100	EX	T 113 H/320, 3 - series - Pianale pi	-	1523410	11.0	18.01	73.0	A-8	G
8190.100	EX	T 113 H/320, 3 - series - Pianale pi	-	1523410	11.0	18.01	73.0	A-8	G
8189.100	IN	T 113 H/320, 3 - series - Pianale pi	-	1523410	11.0	18.01	80.0	A-8	G
8189.100	IN	T 113 H/320, 3 - series - Pianale pi	-	1523410	11.0	18.01	80.0	A-8	G
8189.100	IN	T 113 H/320, 3 - series - Pianale pi	-	1523410	11.0	18.01	80.0	A-8	G
8190.100	EX	T 113 H/320, 3 - series - Pianale pi	-	1523410	11.0	18.01	73.0	A-8	G
8191.600	IN-EX	T 113 H/320, 3 - series - Pianale pi	-	1940008	10.0	16.01	73.0	F-8	G
8191.600	IN-EX	T 113 H/320, 3 - series - Pianale pi	-	1940008	10.0	16.01	73.0	F-8	G
8191.600	IN-EX	T 113 H/320, 3 - series - Pianale pi	-	1940008	10.0	16.01	73.0	F-8	G
8190.100	EX	T 113 H/320, 3 - series - Pianale pi	-	300957	11.0	18.01	73.0	A-8	G

(D1) Internal diameter, (D2) External diameter, (B) Shape, (C) Material

VALVE GUIDES

IVT Ref.	Type	Model	Engine	OEM Ref.	D1	D2	Length	B	C
SCANIA									
8190.100	EX	T 113 H/320, 3 - series - Pianale pi	-	300957	11.0	18.01	73.0	A-8	G
8190.100	EX	T 113 H/320, 3 - series - Pianale pi	-	300957	11.0	18.01	73.0	A-8	G
8189.100	IN	T 113 H/320, 3 - series - Pianale pi	-	300957	11.0	18.01	80.0	A-8	G
8189.100	IN	T 113 H/320, 3 - series - Pianale pi	-	300957	11.0	18.01	80.0	A-8	G
8189.100	IN	T 113 H/320, 3 - series - Pianale pi	-	300957	11.0	18.01	80.0	A-8	G
8191.600	IN-EX	T 113 H/320, 3 - series - Trattore p	-	1403823	10.0	16.01	73.0	F-8	G
8191.600	IN-EX	T 113 H/320, 3 - series - Trattore p	-	1403823	10.0	16.01	73.0	F-8	G
8191.600	IN-EX	T 113 H/320, 3 - series - Trattore p	-	1403823	10.0	16.01	73.0	F-8	G
8190.100	EX	T 113 H/320, 3 - series - Trattore p	-	1523410	11.0	18.01	73.0	A-8	G
8190.100	EX	T 113 H/320, 3 - series - Trattore p	-	1523410	11.0	18.01	73.0	A-8	G
8190.100	EX	T 113 H/320, 3 - series - Trattore p	-	1523410	11.0	18.01	73.0	A-8	G
8189.100	IN	T 113 H/320, 3 - series - Trattore p	-	1523410	11.0	18.01	80.0	A-8	G
8189.100	IN	T 113 H/320, 3 - series - Trattore p	-	1523410	11.0	18.01	80.0	A-8	G
8189.100	IN	T 113 H/320, 3 - series - Trattore p	-	1523410	11.0	18.01	80.0	A-8	G
8191.600	IN-EX	T 113 H/320, 3 - series - Trattore p	-	1940008	10.0	16.01	73.0	F-8	G
8191.600	IN-EX	T 113 H/320, 3 - series - Trattore p	-	1940008	10.0	16.01	73.0	F-8	G
8191.600	IN-EX	T 113 H/320, 3 - series - Trattore p	-	1940008	10.0	16.01	73.0	F-8	G
8190.100	EX	T 113 H/320, 3 - series - Trattore p	-	300957	11.0	18.01	73.0	A-8	G
8190.100	EX	T 113 H/320, 3 - series - Trattore p	-	300957	11.0	18.01	73.0	A-8	G
8190.100	EX	T 113 H/320, 3 - series - Trattore p	-	300957	11.0	18.01	73.0	A-8	G
8189.100	IN	T 113 H/320, 3 - series - Trattore p	-	300957	11.0	18.01	80.0	A-8	G
8189.100	IN	T 113 H/320, 3 - series - Trattore p	-	300957	11.0	18.01	80.0	A-8	G
8189.100	IN	T 113 H/320, 3 - series - Trattore p	-	300957	11.0	18.01	80.0	A-8	G
8191.600	IN-EX	T 113 H/360, 3 - series - Cassone	-	1403823	10.0	16.01	73.0	F-8	G
8190.100	EX	T 113 H/360, 3 - series - Cassone	-	1523410	11.0	18.01	73.0	A-8	G
8189.100	IN	T 113 H/360, 3 - series - Cassone	-	1523410	11.0	18.01	80.0	A-8	G
8191.600	IN-EX	T 113 H/360, 3 - series - Cassone	-	1940008	10.0	16.01	73.0	F-8	G
8190.100	EX	T 113 H/360, 3 - series - Cassone	-	300957	11.0	18.01	73.0	A-8	G
8189.100	IN	T 113 H/360, 3 - series - Cassone	-	300957	11.0	18.01	80.0	A-8	G
8191.600	IN-EX	T 113 H/360, 3 - series - Pianale pi	-	1403823	10.0	16.01	73.0	F-8	G
8190.100	EX	T 113 H/360, 3 - series - Pianale pi	-	1523410	11.0	18.01	73.0	A-8	G
8189.100	IN	T 113 H/360, 3 - series - Pianale pi	-	1523410	11.0	18.01	80.0	A-8	G
8191.600	IN-EX	T 113 H/360, 3 - series - Pianale pi	-	1940008	10.0	16.01	73.0	F-8	G
8190.100	EX	T 113 H/360, 3 - series - Pianale pi	-	300957	11.0	18.01	73.0	A-8	G
8189.100	IN	T 113 H/360, 3 - series - Pianale pi	-	300957	11.0	18.01	80.0	A-8	G
8191.600	IN-EX	T 113 H/360, 3 - series - Trattore p	-	1403823	10.0	16.01	73.0	F-8	G
8191.600	IN-EX	T 113 H/360, 3 - series - Trattore p	-	1403823	10.0	16.01	73.0	F-8	G
8191.600	IN-EX	T 113 H/360, 3 - series - Trattore p	-	1403823	10.0	16.01	73.0	F-8	G
8190.100	EX	T 113 H/360, 3 - series - Trattore p	-	1523410	11.0	18.01	73.0	A-8	G
8190.100	EX	T 113 H/360, 3 - series - Trattore p	-	1523410	11.0	18.01	73.0	A-8	G
8189.100	IN	T 113 H/360, 3 - series - Trattore p	-	1523410	11.0	18.01	80.0	A-8	G
8189.100	IN	T 113 H/360, 3 - series - Trattore p	-	1523410	11.0	18.01	80.0	A-8	G
8189.100	IN	T 113 H/360, 3 - series - Trattore p	-	1523410	11.0	18.01	80.0	A-8	G
8190.100	EX	T 113 H/360, 3 - series - Trattore p	-	1523410	11.0	18.01	73.0	A-8	G
8191.600	IN-EX	T 113 H/360, 3 - series - Trattore p	-	1940008	10.0	16.01	73.0	F-8	G
8191.600	IN-EX	T 113 H/360, 3 - series - Trattore p	-	1940008	10.0	16.01	73.0	F-8	G
8191.600	IN-EX	T 113 H/360, 3 - series - Trattore p	-	1940008	10.0	16.01	73.0	F-8	G
8190.100	EX	T 113 H/360, 3 - series - Trattore p	-	300957	11.0	18.01	73.0	A-8	G
8190.100	EX	T 113 H/360, 3 - series - Trattore p	-	300957	11.0	18.01	73.0	A-8	G
8190.100	EX	T 113 H/360, 3 - series - Trattore p	-	300957	11.0	18.01	73.0	A-8	G
8189.100	IN	T 113 H/360, 3 - series - Trattore p	-	300957	11.0	18.01	80.0	A-8	G
8189.100	IN	T 113 H/360, 3 - series - Trattore p	-	300957	11.0	18.01	80.0	A-8	G
8189.100	IN	T 113 H/360, 3 - series - Trattore p	-	300957	11.0	18.01	80.0	A-8	G
8190.100	EX	T 114 C/340, 4 - series - Pianale pi	-	1523410	11.0	18.01	73.0	A-8	G
8189.100	IN	T 114 C/340, 4 - series - Pianale pi	-	1523410	11.0	18.01	80.0	A-8	G
8190.100	EX	T 114 C/340, 4 - series - Pianale pi	-	300957	11.0	18.01	73.0	A-8	G
8189.100	IN	T 114 C/340, 4 - series - Pianale pi	-	300957	11.0	18.01	80.0	A-8	G
8190.100	EX	T 142 E/390, 2 - series - Pianale pi	-	1523410	11.0	18.01	73.0	A-8	G
8189.100	IN	T 142 E/390, 2 - series - Pianale pi	-	1523410	11.0	18.01	80.0	A-8	G
8190.100	EX	T 142 E/390, 2 - series - Pianale pi	-	300957	11.0	18.01	73.0	A-8	G
8189.100	IN	T 142 E/390, 2 - series - Pianale pi	-	300957	11.0	18.01	80.0	A-8	G
8191.600	IN-EX	T 143 E/420, 3 - series - Trattore p	-	1403823	10.0	16.01	73.0	F-8	G

(D1) Internal diameter, (D2) External diameter, (B) Shape, (C) Material

VALVE GUIDES

IVT Ref.	Type	Model	Engine	OEM Ref.	D1	D2	Length	B	C
SCANIA									
8190.100	EX	T 143 E/420, 3 - series - Trattore p	-	1523410	11.0	18.01	73.0	A-8	G
8189.100	IN	T 143 E/420, 3 - series - Trattore p	-	1523410	11.0	18.01	80.0	A-8	G
8191.600	IN-EX	T 143 E/420, 3 - series - Trattore p	-	1940008	10.0	16.01	73.0	F-8	G
8190.100	EX	T 143 E/420, 3 - series - Trattore p	-	300957	11.0	18.01	73.0	A-8	G
8189.100	IN	T 143 E/420, 3 - series - Trattore p	-	300957	11.0	18.01	80.0	A-8	G
8191.600	IN-EX	T 143 E/450, 3 - series - Trattore p	-	1403823	10.0	16.01	73.0	F-8	G
8190.100	EX	T 143 E/450, 3 - series - Trattore p	-	1523410	11.0	18.01	73.0	A-8	G
8189.100	IN	T 143 E/450, 3 - series - Trattore p	-	1523410	11.0	18.01	80.0	A-8	G
8191.600	IN-EX	T 143 E/450, 3 - series - Trattore p	-	1940008	10.0	16.01	73.0	F-8	G
8190.100	EX	T 143 E/450, 3 - series - Trattore p	-	300957	11.0	18.01	73.0	A-8	G
8189.100	IN	T 143 E/450, 3 - series - Trattore p	-	300957	11.0	18.01	80.0	A-8	G
8191.600	IN-EX	T 143 E/500, 3 - series - Trattore p	-	1403823	10.0	16.01	73.0	F-8	G
8190.100	EX	T 143 E/500, 3 - series - Trattore p	-	1523410	11.0	18.01	73.0	A-8	G
8189.100	IN	T 143 E/500, 3 - series - Trattore p	-	1523410	11.0	18.01	80.0	A-8	G
8191.600	IN-EX	T 143 E/500, 3 - series - Trattore p	-	1940008	10.0	16.01	73.0	F-8	G
8190.100	EX	T 143 E/500, 3 - series - Trattore p	-	300957	11.0	18.01	73.0	A-8	G
8189.100	IN	T 143 E/500, 3 - series - Trattore p	-	300957	11.0	18.01	80.0	A-8	G
8191.600	IN-EX	T 143 H/420, 3 - series - Pianale pi	-	1403823	10.0	16.01	73.0	F-8	G
8191.600	IN-EX	T 143 H/420, 3 - series - Pianale pi	-	1403823	10.0	16.01	73.0	F-8	G
8190.100	EX	T 143 H/420, 3 - series - Pianale pi	-	1523410	11.0	18.01	73.0	A-8	G
8190.100	EX	T 143 H/420, 3 - series - Pianale pi	-	1523410	11.0	18.01	73.0	A-8	G
8189.100	IN	T 143 H/420, 3 - series - Pianale pi	-	1523410	11.0	18.01	80.0	A-8	G
8189.100	IN	T 143 H/420, 3 - series - Pianale pi	-	1523410	11.0	18.01	80.0	A-8	G
8191.600	IN-EX	T 143 H/420, 3 - series - Pianale pi	-	1940008	10.0	16.01	73.0	F-8	G
8191.600	IN-EX	T 143 H/420, 3 - series - Pianale pi	-	1940008	10.0	16.01	73.0	F-8	G
8190.100	EX	T 143 H/420, 3 - series - Pianale pi	-	300957	11.0	18.01	73.0	A-8	G
8190.100	EX	T 143 H/420, 3 - series - Pianale pi	-	300957	11.0	18.01	73.0	A-8	G
8189.100	IN	T 143 H/420, 3 - series - Pianale pi	-	300957	11.0	18.01	80.0	A-8	G
8189.100	IN	T 143 H/420, 3 - series - Pianale pi	-	300957	11.0	18.01	80.0	A-8	G
8191.600	IN-EX	T 143 H/420, 3 - series - Trattore p	-	1403823	10.0	16.01	73.0	F-8	G
8191.600	IN-EX	T 143 H/420, 3 - series - Trattore p	-	1403823	10.0	16.01	73.0	F-8	G
8190.100	EX	T 143 H/420, 3 - series - Trattore p	-	1523410	11.0	18.01	73.0	A-8	G
8189.100	IN	T 143 H/420, 3 - series - Trattore p	-	1523410	11.0	18.01	80.0	A-8	G
8190.100	EX	T 143 H/420, 3 - series - Trattore p	-	1523410	11.0	18.01	73.0	A-8	G
8189.100	IN	T 143 H/420, 3 - series - Trattore p	-	1523410	11.0	18.01	80.0	A-8	G
8191.600	IN-EX	T 143 H/420, 3 - series - Trattore p	-	1940008	10.0	16.01	73.0	F-8	G
8191.600	IN-EX	T 143 H/420, 3 - series - Trattore p	-	1940008	10.0	16.01	73.0	F-8	G
8190.100	EX	T 143 H/420, 3 - series - Trattore p	-	300957	11.0	18.01	73.0	A-8	G
8190.100	EX	T 143 H/420, 3 - series - Trattore p	-	300957	11.0	18.01	73.0	A-8	G
8189.100	IN	T 143 H/420, 3 - series - Trattore p	-	300957	11.0	18.01	80.0	A-8	G
8189.100	IN	T 143 H/420, 3 - series - Trattore p	-	300957	11.0	18.01	80.0	A-8	G
8191.600	IN-EX	T 143 H/450, 3 - series - Trattore p	-	1403823	10.0	16.01	73.0	F-8	G
8191.600	IN-EX	T 143 H/450, 3 - series - Trattore p	-	1403823	10.0	16.01	73.0	F-8	G
8190.100	EX	T 143 H/450, 3 - series - Trattore p	-	1523410	11.0	18.01	73.0	A-8	G
8190.100	EX	T 143 H/450, 3 - series - Trattore p	-	1523410	11.0	18.01	73.0	A-8	G
8189.100	IN	T 143 H/450, 3 - series - Trattore p	-	1523410	11.0	18.01	80.0	A-8	G
8189.100	IN	T 143 H/450, 3 - series - Trattore p	-	1523410	11.0	18.01	80.0	A-8	G
8191.600	IN-EX	T 143 H/450, 3 - series - Trattore p	-	1940008	10.0	16.01	73.0	F-8	G
8191.600	IN-EX	T 143 H/450, 3 - series - Trattore p	-	1940008	10.0	16.01	73.0	F-8	G
8190.100	EX	T 143 H/450, 3 - series - Trattore p	-	300957	11.0	18.01	73.0	A-8	G
8189.100	IN	T 143 H/450, 3 - series - Trattore p	-	300957	11.0	18.01	80.0	A-8	G
8189.100	IN	T 143 H/450, 3 - series - Trattore p	-	300957	11.0	18.01	80.0	A-8	G
8190.100	EX	T 143 H/450, 3 - series - Trattore p	-	300957	11.0	18.01	73.0	A-8	G
8191.600	IN-EX	T 143 H/500, 3 - series - Trattore p	-	1403823	10.0	16.01	73.0	F-8	G
8191.600	IN-EX	T 143 H/500, 3 - series - Trattore p	-	1403823	10.0	16.01	73.0	F-8	G
8190.100	EX	T 143 H/500, 3 - series - Trattore p	-	1523410	11.0	18.01	73.0	A-8	G
8190.100	EX	T 143 H/500, 3 - series - Trattore p	-	1523410	11.0	18.01	73.0	A-8	G
8189.100	IN	T 143 H/500, 3 - series - Trattore p	-	1523410	11.0	18.01	80.0	A-8	G
8189.100	IN	T 143 H/500, 3 - series - Trattore p	-	1523410	11.0	18.01	80.0	A-8	G
8191.600	IN-EX	T 143 H/500, 3 - series - Trattore p	-	1940008	10.0	16.01	73.0	F-8	G
8191.600	IN-EX	T 143 H/500, 3 - series - Trattore p	-	1940008	10.0	16.01	73.0	F-8	G
8190.100	EX	T 143 H/500, 3 - series - Trattore p	-	300957	11.0	18.01	73.0	A-8	G

(D1) Internal diameter, (D2) External diameter, (B) Shape, (C) Material

VALVE GUIDES

IVT Ref.	Type	Model	Engine	OEM Ref.	D1	D2	Length	B	C
SCANIA									
8189.100	IN	T 143 H/500, 3 - series - Trattore p	-	300957	11.0	18.01	80.0	A-8	G
8190.100	EX	T 143 H/500, 3 - series - Trattore p	-	300957	11.0	18.01	73.0	A-8	G
8189.100	IN	T 143 H/500, 3 - series - Trattore p	-	300957	11.0	18.01	80.0	A-8	G
8191.600	IN-EX	T 144 C/460, 4 - series - Pianale pi	-	1403823	10.0	16.01	73.0	F-8	G
8191.600	IN-EX	T 144 C/460, 4 - series - Pianale pi	-	1403823	10.0	16.01	73.0	F-8	G
8190.100	EX	T 144 C/460, 4 - series - Pianale pi	-	1523410	11.0	18.01	73.0	A-8	G
8190.100	EX	T 144 C/460, 4 - series - Pianale pi	-	1523410	11.0	18.01	73.0	A-8	G
8189.100	IN	T 144 C/460, 4 - series - Pianale pi	-	1523410	11.0	18.01	80.0	A-8	G
8189.100	IN	T 144 C/460, 4 - series - Pianale pi	-	1523410	11.0	18.01	80.0	A-8	G
8191.600	IN-EX	T 144 C/460, 4 - series - Pianale pi	-	1940008	10.0	16.01	73.0	F-8	G
8191.600	IN-EX	T 144 C/460, 4 - series - Pianale pi	-	1940008	10.0	16.01	73.0	F-8	G
8190.100	EX	T 144 C/460, 4 - series - Pianale pi	-	300957	11.0	18.01	73.0	A-8	G
8190.100	EX	T 144 C/460, 4 - series - Pianale pi	-	300957	11.0	18.01	73.0	A-8	G
8189.100	IN	T 144 C/460, 4 - series - Pianale pi	-	300957	11.0	18.01	80.0	A-8	G
8189.100	IN	T 144 C/460, 4 - series - Pianale pi	-	300957	11.0	18.01	80.0	A-8	G
8191.600	IN-EX	T 144 C/460, 4 - series - Trattore p	-	1403823	10.0	16.01	73.0	F-8	G
8191.600	IN-EX	T 144 C/460, 4 - series - Trattore p	-	1403823	10.0	16.01	73.0	F-8	G
8190.100	EX	T 144 C/460, 4 - series - Trattore p	-	1523410	11.0	18.01	73.0	A-8	G
8189.100	IN	T 144 C/460, 4 - series - Trattore p	-	1523410	11.0	18.01	80.0	A-8	G
8190.100	EX	T 144 C/460, 4 - series - Trattore p	-	1523410	11.0	18.01	73.0	A-8	G
8189.100	IN	T 144 C/460, 4 - series - Trattore p	-	1523410	11.0	18.01	80.0	A-8	G
8191.600	IN-EX	T 144 C/460, 4 - series - Trattore p	-	1940008	10.0	16.01	73.0	F-8	G
8191.600	IN-EX	T 144 C/460, 4 - series - Trattore p	-	1940008	10.0	16.01	73.0	F-8	G
8190.100	EX	T 144 C/460, 4 - series - Trattore p	-	300957	11.0	18.01	73.0	A-8	G
8190.100	EX	T 144 C/460, 4 - series - Trattore p	-	300957	11.0	18.01	73.0	A-8	G
8189.100	IN	T 144 C/460, 4 - series - Trattore p	-	300957	11.0	18.01	80.0	A-8	G
8189.100	IN	T 144 C/460, 4 - series - Trattore p	-	300957	11.0	18.01	80.0	A-8	G
8191.600	IN-EX	T 144 C/530, 4 - series - Pianale pi	-	1403823	10.0	16.01	73.0	F-8	G
8191.600	IN-EX	T 144 C/530, 4 - series - Pianale pi	-	1403823	10.0	16.01	73.0	F-8	G
8190.100	EX	T 144 C/530, 4 - series - Pianale pi	-	1523410	11.0	18.01	73.0	A-8	G
8190.100	EX	T 144 C/530, 4 - series - Pianale pi	-	1523410	11.0	18.01	73.0	A-8	G
8189.100	IN	T 144 C/530, 4 - series - Pianale pi	-	1523410	11.0	18.01	80.0	A-8	G
8189.100	IN	T 144 C/530, 4 - series - Pianale pi	-	1523410	11.0	18.01	80.0	A-8	G
8191.600	IN-EX	T 144 C/530, 4 - series - Pianale pi	-	1940008	10.0	16.01	73.0	F-8	G
8191.600	IN-EX	T 144 C/530, 4 - series - Pianale pi	-	1940008	10.0	16.01	73.0	F-8	G
8190.100	EX	T 144 C/530, 4 - series - Pianale pi	-	300957	11.0	18.01	73.0	A-8	G
8189.100	IN	T 144 C/530, 4 - series - Pianale pi	-	300957	11.0	18.01	80.0	A-8	G
8190.100	EX	T 144 C/530, 4 - series - Pianale pi	-	300957	11.0	18.01	73.0	A-8	G
8189.100	IN	T 144 C/530, 4 - series - Pianale pi	-	300957	11.0	18.01	80.0	A-8	G
8191.600	IN-EX	T 144 C/530, 4 - series - Trattore p	-	1403823	10.0	16.01	73.0	F-8	G
8191.600	IN-EX	T 144 C/530, 4 - series - Trattore p	-	1403823	10.0	16.01	73.0	F-8	G
8190.100	EX	T 144 C/530, 4 - series - Trattore p	-	1523410	11.0	18.01	73.0	A-8	G
8190.100	EX	T 144 C/530, 4 - series - Trattore p	-	1523410	11.0	18.01	73.0	A-8	G
8189.100	IN	T 144 C/530, 4 - series - Trattore p	-	1523410	11.0	18.01	80.0	A-8	G
8189.100	IN	T 144 C/530, 4 - series - Trattore p	-	1523410	11.0	18.01	80.0	A-8	G
8191.600	IN-EX	T 144 C/530, 4 - series - Trattore p	-	1940008	10.0	16.01	73.0	F-8	G
8191.600	IN-EX	T 144 C/530, 4 - series - Trattore p	-	1940008	10.0	16.01	73.0	F-8	G
8189.100	IN	T 144 C/530, 4 - series - Trattore p	-	300957	11.0	18.01	80.0	A-8	G
8189.100	IN	T 144 C/530, 4 - series - Trattore p	-	300957	11.0	18.01	80.0	A-8	G
8190.100	EX	T 144 C/530, 4 - series - Trattore p	-	300957	11.0	18.01	73.0	A-8	G
8190.100	EX	T 144 C/530, 4 - series - Trattore p	-	300957	11.0	18.01	73.0	A-8	G
8191.600	IN-EX	T 144 G/460, 4 - series - Pianale p	-	1403823	10.0	16.01	73.0	F-8	G
8191.600	IN-EX	T 144 G/460, 4 - series - Pianale p	-	1403823	10.0	16.01	73.0	F-8	G
8191.600	IN-EX	T 144 G/460, 4 - series - Pianale p	-	1403823	10.0	16.01	73.0	F-8	G
8189.100	IN	T 144 G/460, 4 - series - Pianale p	-	1523410	11.0	18.01	80.0	A-8	G
8189.100	IN	T 144 G/460, 4 - series - Pianale p	-	1523410	11.0	18.01	80.0	A-8	G
8189.100	IN	T 144 G/460, 4 - series - Pianale p	-	1523410	11.0	18.01	80.0	A-8	G
8190.100	EX	T 144 G/460, 4 - series - Pianale p	-	1523410	11.0	18.01	73.0	A-8	G
8190.100	EX	T 144 G/460, 4 - series - Pianale p	-	1523410	11.0	18.01	73.0	A-8	G
8190.100	EX	T 144 G/460, 4 - series - Pianale p	-	1523410	11.0	18.01	73.0	A-8	G
8191.600	IN-EX	T 144 G/460, 4 - series - Pianale p	-	1940008	10.0	16.01	73.0	F-8	G
8191.600	IN-EX	T 144 G/460, 4 - series - Pianale p	-	1940008	10.0	16.01	73.0	F-8	G

(D1) Internal diameter, (D2) External diameter, (B) Shape, (C) Material

VALVE GUIDES

IVT Ref.	Type	Model	Engine	OEM Ref.	D1	D2	Length	B	C
SCANIA									
8191.600	IN-EX	T 144 G/460, 4 - series - Pianale p	-	1940008	10.0	16.01	73.0	F-8	G
8190.100	EX	T 144 G/460, 4 - series - Pianale p	-	300957	11.0	18.01	73.0	A-8	G
8190.100	EX	T 144 G/460, 4 - series - Pianale p	-	300957	11.0	18.01	73.0	A-8	G
8190.100	EX	T 144 G/460, 4 - series - Pianale p	-	300957	11.0	18.01	73.0	A-8	G
8189.100	IN	T 144 G/460, 4 - series - Pianale p	-	300957	11.0	18.01	80.0	A-8	G
8189.100	IN	T 144 G/460, 4 - series - Pianale p	-	300957	11.0	18.01	80.0	A-8	G
8189.100	IN	T 144 G/460, 4 - series - Pianale p	-	300957	11.0	18.01	80.0	A-8	G
8191.600	IN-EX	T 144 G/460, 4 - series - Trattore	-	1403823	10.0	16.01	73.0	F-8	G
8191.600	IN-EX	T 144 G/460, 4 - series - Trattore	-	1403823	10.0	16.01	73.0	F-8	G
8191.600	IN-EX	T 144 G/460, 4 - series - Trattore	-	1403823	10.0	16.01	73.0	F-8	G
8189.100	IN	T 144 G/460, 4 - series - Trattore	-	1523410	11.0	18.01	80.0	A-8	G
8190.100	EX	T 144 G/460, 4 - series - Trattore	-	1523410	11.0	18.01	73.0	A-8	G
8190.100	EX	T 144 G/460, 4 - series - Trattore	-	1523410	11.0	18.01	73.0	A-8	G
8190.100	EX	T 144 G/460, 4 - series - Trattore	-	1523410	11.0	18.01	73.0	A-8	G
8189.100	IN	T 144 G/460, 4 - series - Trattore	-	1523410	11.0	18.01	80.0	A-8	G
8189.100	IN	T 144 G/460, 4 - series - Trattore	-	1523410	11.0	18.01	80.0	A-8	G
8191.600	IN-EX	T 144 G/460, 4 - series - Trattore	-	1940008	10.0	16.01	73.0	F-8	G
8191.600	IN-EX	T 144 G/460, 4 - series - Trattore	-	1940008	10.0	16.01	73.0	F-8	G
8191.600	IN-EX	T 144 G/460, 4 - series - Trattore	-	1940008	10.0	16.01	73.0	F-8	G
8189.100	IN	T 144 G/460, 4 - series - Trattore	-	300957	11.0	18.01	80.0	A-8	G
8190.100	EX	T 144 G/460, 4 - series - Trattore	-	300957	11.0	18.01	73.0	A-8	G
8190.100	EX	T 144 G/460, 4 - series - Trattore	-	300957	11.0	18.01	73.0	A-8	G
8190.100	EX	T 144 G/460, 4 - series - Trattore	-	300957	11.0	18.01	73.0	A-8	G
8189.100	IN	T 144 G/460, 4 - series - Trattore	-	300957	11.0	18.01	80.0	A-8	G
8189.100	IN	T 144 G/460, 4 - series - Trattore	-	300957	11.0	18.01	80.0	A-8	G
8191.600	IN-EX	T 144 G/530, 4 - series - Pianale p	-	1403823	10.0	16.01	73.0	F-8	G
8191.600	IN-EX	T 144 G/530, 4 - series - Pianale p	-	1403823	10.0	16.01	73.0	F-8	G
8191.600	IN-EX	T 144 G/530, 4 - series - Pianale p	-	1403823	10.0	16.01	73.0	F-8	G
8190.100	EX	T 144 G/530, 4 - series - Pianale p	-	1523410	11.0	18.01	73.0	A-8	G
8189.100	IN	T 144 G/530, 4 - series - Pianale p	-	1523410	11.0	18.01	80.0	A-8	G
8189.100	IN	T 144 G/530, 4 - series - Pianale p	-	1523410	11.0	18.01	80.0	A-8	G
8189.100	IN	T 144 G/530, 4 - series - Pianale p	-	1523410	11.0	18.01	80.0	A-8	G
8190.100	EX	T 144 G/530, 4 - series - Pianale p	-	1523410	11.0	18.01	73.0	A-8	G
8190.100	EX	T 144 G/530, 4 - series - Pianale p	-	1523410	11.0	18.01	73.0	A-8	G
8191.600	IN-EX	T 144 G/530, 4 - series - Pianale p	-	1940008	10.0	16.01	73.0	F-8	G
8191.600	IN-EX	T 144 G/530, 4 - series - Pianale p	-	1940008	10.0	16.01	73.0	F-8	G
8191.600	IN-EX	T 144 G/530, 4 - series - Pianale p	-	1940008	10.0	16.01	73.0	F-8	G
8189.100	IN	T 144 G/530, 4 - series - Pianale p	-	300957	11.0	18.01	80.0	A-8	G
8189.100	IN	T 144 G/530, 4 - series - Pianale p	-	300957	11.0	18.01	80.0	A-8	G
8190.100	EX	T 144 G/530, 4 - series - Pianale p	-	300957	11.0	18.01	73.0	A-8	G
8190.100	EX	T 144 G/530, 4 - series - Pianale p	-	300957	11.0	18.01	73.0	A-8	G
8190.100	EX	T 144 G/530, 4 - series - Pianale p	-	300957	11.0	18.01	73.0	A-8	G
8189.100	IN	T 144 G/530, 4 - series - Pianale p	-	300957	11.0	18.01	80.0	A-8	G
8191.600	IN-EX	T 144 G/530, 4 - series - Trattore	-	1403823	10.0	16.01	73.0	F-8	G
8191.600	IN-EX	T 144 G/530, 4 - series - Trattore	-	1403823	10.0	16.01	73.0	F-8	G
8191.600	IN-EX	T 144 G/530, 4 - series - Trattore	-	1403823	10.0	16.01	73.0	F-8	G
8189.100	IN	T 144 G/530, 4 - series - Trattore	-	1523410	11.0	18.01	80.0	A-8	G
8189.100	IN	T 144 G/530, 4 - series - Trattore	-	1523410	11.0	18.01	80.0	A-8	G
8189.100	IN	T 144 G/530, 4 - series - Trattore	-	1523410	11.0	18.01	80.0	A-8	G
8190.100	EX	T 144 G/530, 4 - series - Trattore	-	1523410	11.0	18.01	73.0	A-8	G
8190.100	EX	T 144 G/530, 4 - series - Trattore	-	1523410	11.0	18.01	73.0	A-8	G
8190.100	EX	T 144 G/530, 4 - series - Trattore	-	1523410	11.0	18.01	73.0	A-8	G
8191.600	IN-EX	T 144 G/530, 4 - series - Trattore	-	1940008	10.0	16.01	73.0	F-8	G
8191.600	IN-EX	T 144 G/530, 4 - series - Trattore	-	1940008	10.0	16.01	73.0	F-8	G
8191.600	IN-EX	T 144 G/530, 4 - series - Trattore	-	1940008	10.0	16.01	73.0	F-8	G
8190.100	EX	T 144 G/530, 4 - series - Trattore	-	300957	11.0	18.01	73.0	A-8	G
8189.100	IN	T 144 G/530, 4 - series - Trattore	-	300957	11.0	18.01	80.0	A-8	G
8190.100	EX	T 144 G/530, 4 - series - Trattore	-	300957	11.0	18.01	73.0	A-8	G
8189.100	IN	T 144 G/530, 4 - series - Trattore	-	300957	11.0	18.01	80.0	A-8	G
8189.100	IN	T 144 G/530, 4 - series - Trattore	-	300957	11.0	18.01	80.0	A-8	G
8190.100	EX	T 144 G/530, 4 - series - Trattore	-	300957	11.0	18.01	73.0	A-8	G
8191.600	IN-EX	T 144 L/460, 4 - series - Trattore p	-	1403823	10.0	16.01	73.0	F-8	G

(D1) Internal diameter, (D2) External diameter, (B) Shape, (C) Material

VALVE GUIDES

IVT Ref.	Type	Model	Engine	OEM Ref.	D1	D2	Length	B	C
SCANIA									
8191.600	IN-EX	T 144 L/460, 4 - series - Trattore p	-	1403823	10.0	16.01	73.0	F-8	G
8191.600	IN-EX	T 144 L/460, 4 - series - Trattore p	-	1403823	10.0	16.01	73.0	F-8	G
8191.600	IN-EX	T 144 L/460, 4 - series - Trattore p	-	1403823	10.0	16.01	73.0	F-8	G
8189.100	IN	T 144 L/460, 4 - series - Trattore p	-	1523410	11.0	18.01	80.0	A-8	G
8189.100	IN	T 144 L/460, 4 - series - Trattore p	-	1523410	11.0	18.01	80.0	A-8	G
8189.100	IN	T 144 L/460, 4 - series - Trattore p	-	1523410	11.0	18.01	80.0	A-8	G
8189.100	IN	T 144 L/460, 4 - series - Trattore p	-	1523410	11.0	18.01	80.0	A-8	G
8190.100	EX	T 144 L/460, 4 - series - Trattore p	-	1523410	11.0	18.01	73.0	A-8	G
8190.100	EX	T 144 L/460, 4 - series - Trattore p	-	1523410	11.0	18.01	73.0	A-8	G
8190.100	EX	T 144 L/460, 4 - series - Trattore p	-	1523410	11.0	18.01	73.0	A-8	G
8190.100	EX	T 144 L/460, 4 - series - Trattore p	-	1523410	11.0	18.01	73.0	A-8	G
8191.600	IN-EX	T 144 L/460, 4 - series - Trattore p	-	1940008	10.0	16.01	73.0	F-8	G
8191.600	IN-EX	T 144 L/460, 4 - series - Trattore p	-	1940008	10.0	16.01	73.0	F-8	G
8191.600	IN-EX	T 144 L/460, 4 - series - Trattore p	-	1940008	10.0	16.01	73.0	F-8	G
8191.600	IN-EX	T 144 L/460, 4 - series - Trattore p	-	1940008	10.0	16.01	73.0	F-8	G
8190.100	EX	T 144 L/460, 4 - series - Trattore p	-	300957	11.0	18.01	73.0	A-8	G
8190.100	EX	T 144 L/460, 4 - series - Trattore p	-	300957	11.0	18.01	73.0	A-8	G
8190.100	EX	T 144 L/460, 4 - series - Trattore p	-	300957	11.0	18.01	73.0	A-8	G
8190.100	EX	T 144 L/460, 4 - series - Trattore p	-	300957	11.0	18.01	73.0	A-8	G
8189.100	IN	T 144 L/460, 4 - series - Trattore p	-	300957	11.0	18.01	80.0	A-8	G
8189.100	IN	T 144 L/460, 4 - series - Trattore p	-	300957	11.0	18.01	80.0	A-8	G
8189.100	IN	T 144 L/460, 4 - series - Trattore p	-	300957	11.0	18.01	80.0	A-8	G
8189.100	IN	T 144 L/460, 4 - series - Trattore p	-	300957	11.0	18.01	80.0	A-8	G
8191.600	IN-EX	T 144 L/530, 4 - series - Trattore p	-	1403823	10.0	16.01	73.0	F-8	G
8191.600	IN-EX	T 144 L/530, 4 - series - Trattore p	-	1403823	10.0	16.01	73.0	F-8	G
8191.600	IN-EX	T 144 L/530, 4 - series - Trattore p	-	1403823	10.0	16.01	73.0	F-8	G
8191.600	IN-EX	T 144 L/530, 4 - series - Trattore p	-	1403823	10.0	16.01	73.0	F-8	G
8190.100	EX	T 144 L/530, 4 - series - Trattore p	-	1523410	11.0	18.01	73.0	A-8	G
8189.100	IN	T 144 L/530, 4 - series - Trattore p	-	1523410	11.0	18.01	80.0	A-8	G
8190.100	EX	T 144 L/530, 4 - series - Trattore p	-	1523410	11.0	18.01	73.0	A-8	G
8190.100	EX	T 144 L/530, 4 - series - Trattore p	-	1523410	11.0	18.01	73.0	A-8	G
8189.100	IN	T 144 L/530, 4 - series - Trattore p	-	1523410	11.0	18.01	80.0	A-8	G
8189.100	IN	T 144 L/530, 4 - series - Trattore p	-	1523410	11.0	18.01	80.0	A-8	G
8189.100	IN	T 144 L/530, 4 - series - Trattore p	-	1523410	11.0	18.01	80.0	A-8	G
8190.100	EX	T 144 L/530, 4 - series - Trattore p	-	1523410	11.0	18.01	73.0	A-8	G
8191.600	IN-EX	T 144 L/530, 4 - series - Trattore p	-	1940008	10.0	16.01	73.0	F-8	G
8191.600	IN-EX	T 144 L/530, 4 - series - Trattore p	-	1940008	10.0	16.01	73.0	F-8	G
8191.600	IN-EX	T 144 L/530, 4 - series - Trattore p	-	1940008	10.0	16.01	73.0	F-8	G
8191.600	IN-EX	T 144 L/530, 4 - series - Trattore p	-	1940008	10.0	16.01	73.0	F-8	G
8189.100	IN	T 144 L/530, 4 - series - Trattore p	-	300957	11.0	18.01	80.0	A-8	G
8190.100	EX	T 144 L/530, 4 - series - Trattore p	-	300957	11.0	18.01	73.0	A-8	G
8190.100	EX	T 144 L/530, 4 - series - Trattore p	-	300957	11.0	18.01	73.0	A-8	G
8190.100	EX	T 144 L/530, 4 - series - Trattore p	-	300957	11.0	18.01	73.0	A-8	G
8189.100	IN	T 144 L/530, 4 - series - Trattore p	-	300957	11.0	18.01	80.0	A-8	G
8189.100	IN	T 144 L/530, 4 - series - Trattore p	-	300957	11.0	18.01	80.0	A-8	G
8189.100	IN	T 144 L/530, 4 - series - Trattore p	-	300957	11.0	18.01	80.0	A-8	G
8190.100	EX	T 144 L/530, 4 - series - Trattore p	-	300957	11.0	18.01	73.0	A-8	G
8190.100	EX	T 93 H/250, 3 - series - Cassone ri	-	1523410	11.0	18.01	73.0	A-8	G
8189.100	IN	T 93 H/250, 3 - series - Cassone ri	-	1523410	11.0	18.01	80.0	A-8	G
8190.100	EX	T 93 H/250, 3 - series - Cassone ri	-	300957	11.0	18.01	73.0	A-8	G
8189.100	IN	T 93 H/250, 3 - series - Cassone ri	-	300957	11.0	18.01	80.0	A-8	G
8190.100	EX	T 93 H/250, 3 - series - Pianale pia	-	1523410	11.0	18.01	73.0	A-8	G
8190.100	EX	T 93 H/250, 3 - series - Pianale pia	-	1523410	11.0	18.01	73.0	A-8	G
8189.100	IN	T 93 H/250, 3 - series - Pianale pia	-	1523410	11.0	18.01	80.0	A-8	G
8189.100	IN	T 93 H/250, 3 - series - Pianale pia	-	1523410	11.0	18.01	80.0	A-8	G
8189.100	IN	T 93 H/250, 3 - series - Pianale pia	-	300957	11.0	18.01	80.0	A-8	G
8189.100	IN	T 93 H/250, 3 - series - Pianale pia	-	300957	11.0	18.01	80.0	A-8	G
8190.100	EX	T 93 H/250, 3 - series - Pianale pia	-	300957	11.0	18.01	73.0	A-8	G
8190.100	EX	T 93 H/250, 3 - series - Pianale pia	-	300957	11.0	18.01	73.0	A-8	G
8189.100	IN	T 93 H/280, 3 - series - Cassone ri	-	1523410	11.0	18.01	80.0	A-8	G
8190.100	EX	T 93 H/280, 3 - series - Cassone ri	-	1523410	11.0	18.01	73.0	A-8	G
8190.100	EX	T 93 H/280, 3 - series - Cassone ri	-	300957	11.0	18.01	73.0	A-8	G

(D1) Internal diameter, (D2) External diameter, (B) Shape, (C) Material

VALVE GUIDES

IVT Ref.	Type	Model	Engine	OEM Ref.	D1	D2	Length	B	C
SCANIA									
8189.100	IN	T 93 H/280, 3 - series - Cassone ri	-	300957	11.0	18.01	80.0	A-8	G
8190.100	EX	T 93 H/280, 3 - series - Pianale pia	-	1523410	11.0	18.01	73.0	A-8	G
8189.100	IN	T 93 H/280, 3 - series - Pianale pia	-	1523410	11.0	18.01	80.0	A-8	G
8190.100	EX	T 93 H/280, 3 - series - Pianale pia	-	1523410	11.0	18.01	73.0	A-8	G
8189.100	IN	T 93 H/280, 3 - series - Pianale pia	-	1523410	11.0	18.01	80.0	A-8	G
8189.100	IN	T 93 H/280, 3 - series - Pianale pia	-	300957	11.0	18.01	80.0	A-8	G
8190.100	EX	T 93 H/280, 3 - series - Pianale pia	-	300957	11.0	18.01	73.0	A-8	G
8189.100	IN	T 93 H/280, 3 - series - Pianale pia	-	300957	11.0	18.01	80.0	A-8	G
8190.100	EX	T 93 H/280, 3 - series - Pianale pia	-	300957	11.0	18.01	73.0	A-8	G
SEAT									
8052.701	IN-EX	ALHAMBRA (7V8, 7V9), 1.9 TDI	ANU/1Z/AHU	0371034188	7.0	12.06	36.4	G	B
8054.701	IN-EX	ALHAMBRA (7V8, 7V9), 1.9 TDI	ANU/1Z/AHU	056103419A	8.0	12.06	36.5	G	B
8052.701	IN-EX	ALHAMBRA (7V8, 7V9), 1.9 TDI	ASZ	0371034188	7.0	12.06	36.4	G	B
8052.701	IN-EX	ALHAMBRA (7V8, 7V9), 1.9 TDI	AVG/AFN	0371034188	7.0	12.06	36.4	G	B
8052.701	IN-EX	ALHAMBRA (7V8, 7V9), 1.9 TDI	BTB	0371034188	7.0	12.06	36.4	G	B
8052.701	IN-EX	ALHAMBRA (7V8, 7V9), 1.9 TDI	BVK/AUY	0371034188	7.0	12.06	36.4	G	B
8052.701	IN-EX	ALHAMBRA (7V8, 7V9), 1.9 TDI 4	BVK/AUY	0371034188	7.0	12.06	36.4	G	B
8052.701	IN-EX	ALHAMBRA (7V8, 7V9), 2.0 i	ATM/ADY	0371034188	7.0	12.06	36.4	G	B
8170.601	IN-EX	ALHAMBRA (7V8, 7V9), 2.0 TDI	BRT		6.0	10.06	42.0	F	B
8037.601	IN-EX	ALTEA (5P1), 1.6	BGU/CCSA/BSF/CMXA/BSE		6.0	12.06	36.4	F	B
8052.701	IN-EX	ALTEA (5P1), 1.9 TDI	BXE/BKC/BJB/BLS	0371034188	7.0	12.06	36.4	G	B
8170.601	IN-EX	ALTEA (5P1), 2.0 TDI	AZV		6.0	10.06	42.0	F	B
8170.601	IN-EX	ALTEA (5P1), 2.0 TDI	BMM		6.0	10.06	42.0	F	B
8170.601	IN-EX	ALTEA (5P1), 2.0 TDI	CEGA/BMN		6.0	10.06	42.0	F	B
8170.601	IN-EX	ALTEA (5P1), 2.0 TDI 16V	CFHC/BKD		6.0	10.06	42.0	F	B
8037.601	IN-EX	ALTEA XL (5P5, 5P8), 1.6	CCSA/BSF/CMXA/BSE		6.0	12.06	36.4	F	B
8052.701	IN-EX	ALTEA XL (5P5, 5P8), 1.9 TDI	BXE/BKC/BLS	0371034188	7.0	12.06	36.4	G	B
8052.701	IN-EX	ALTEA XL (5P5, 5P8), 1.9 TDI	BXF	0371034188	7.0	12.06	36.4	G	B
8170.601	IN-EX	ALTEA XL (5P5, 5P8), 2.0 TDI	BMM		6.0	10.06	42.0	F	B
8170.601	IN-EX	ALTEA XL (5P5, 5P8), 2.0 TDI	CEGA/BMN		6.0	10.06	42.0	F	B
8170.601	IN-EX	ALTEA XL (5P5, 5P8), 2.0 TDI 16	CFHC/BKD		6.0	10.06	42.0	F	B
8170.601	IN-EX	ALTEA XL (5P5, 5P8), 2.0 TDI 16	CFHC		6.0	10.06	42.0	F	B
8170.601	IN-EX	ALTEA XL (5P5, 5P8), 2.0 TDI 4x	BMM		6.0	10.06	42.0	F	B
8170.601	IN-EX	ALTEA XL (5P5, 5P8), 2.0 TDI 4x	CEGA/BMN/CFJA		6.0	10.06	42.0	F	B
8052.701	IN-EX	AROSA (6H), 1.4 TDI	AMF	0371034188	7.0	12.06	36.4	G	B
8052.701	IN-EX	AROSA (6H), 1.7 SDI	AKU	0371034188	7.0	12.06	36.4	G	B
8062.701	IN-EX	AROSA 1.4	AEX / AKV	032103419A	7.0	11.07	33.0	G	B
8054.701	IN-EX	CORDOBA (6K1, 6K2), 1.6 i	1F	056103419A	8.0	12.06	36.5	G	B
8054.701	IN-EX	CORDOBA (6K1, 6K2), 1.6 i	AKL/AFT	056103419A	8.0	12.06	36.5	G	B
8054.701	IN-EX	CORDOBA (6K1, 6K2), 1.8 i	ACC/ADZ/ABS	056103419A	8.0	12.06	36.5	G	B
8054.701	IN-EX	CORDOBA (6K1, 6K2), 1.9 D	1Y	056103419A	8.0	12.06	36.5	G	B
8054.701	IN-EX	CORDOBA (6K1, 6K2), 1.9 D	1Y	056103419A	8.0	12.06	36.5	G	B
8052.701	IN-EX	CORDOBA (6K1, 6K2), 1.9 SDI	AEY	0371034188	7.0	12.06	36.4	G	B
8054.701	IN-EX	CORDOBA (6K1, 6K2), 1.9 TD	AAZ	056103419A	8.0	12.06	36.5	G	B
8052.701	IN-EX	CORDOBA (6K1, 6K2), 1.9 TDI	1Z/AHU	0371034188	7.0	12.06	36.4	G	B
8054.701	IN-EX	CORDOBA (6K1, 6K2), 1.9 TDI	1Z/AHU	056103419A	8.0	12.06	36.5	G	B
8052.701	IN-EX	CORDOBA (6K1, 6K2), 1.9 TDI	AFN	0371034188	7.0	12.06	36.4	G	B
8052.701	IN-EX	CORDOBA (6K1, 6K2), 2.0 i	2E/AGG	0371034188	7.0	12.06	36.4	G	B
8052.701	IN-EX	CORDOBA (6K1, 6K2), 2.0 i 16V	ABF	0371034188	7.0	12.06	36.4	G	B
8052.701	IN-EX	CORDOBA (6K2), 1.6	AKL/APF/AEH/AUR	0371034188	7.0	12.06	36.4	G	B
8052.701	IN-EX	CORDOBA (6K2), 1.9 SDI	AQM/AGP	0371034188	7.0	12.06	36.4	G	B
8052.701	IN-EX	CORDOBA (6K2), 1.9 TDI	AHU/AGR/ALH	0371034188	7.0	12.06	36.4	G	B
8052.701	IN-EX	CORDOBA (6K2), 1.9 TDI	ASK/ASV	0371034188	7.0	12.06	36.4	G	B
8052.701	IN-EX	CORDOBA (6L2), 1.4 TDI	AMF	0371034188	7.0	12.06	36.4	G	B
8052.701	IN-EX	CORDOBA (6L2), 1.9 SDI	ASY	0371034188	7.0	12.06	36.4	G	B
8052.701	IN-EX	CORDOBA (6L2), 1.9 TDI	BLT/ASZ	0371034188	7.0	12.06	36.4	G	B
8052.701	IN-EX	CORDOBA (6L2), 1.9 TDI	BMT/AXR/ATD	0371034188	7.0	12.06	36.4	G	B
8052.701	IN-EX	CORDOBA (6L2), 2.0	AZL/BBX	0371034188	7.0	12.06	36.4	G	B
8062.701	IN-EX	CORDOBA 1.4	AEX	032103419A	7.0	11.07	33.0	G	B
8062.701	IN-EX	CORDOBA 1.6	AEE	032103419A	7.0	11.07	33.0	G	B
8078.601	IN-EX	CORDOBA 1.8i 16V	ABF	027103415	7.0	12.06	38.0	F	B

(D1) Internal diameter, (D2) External diameter, (B) Shape, (C) Material

VALVE GUIDES

SEAT

IVT Ref.	Type	Model	Engine	OEM Ref.	D1	D2	Length	B	C
8064.701	IN-EX	CORDOBA 1.8i 16V	ABF	027103419	7.0	12.06	38.0	G	B
8052.701	IN-EX	CORDOBA Vario (6K5), 1.6	AKL/APF/AEH/AUR	0371034188	7.0	12.06	36.4	G	B
8054.701	IN-EX	CORDOBA Vario (6K5), 1.6 i	1F	056103419A	8.0	12.06	36.5	G	B
8054.701	IN-EX	CORDOBA Vario (6K5), 1.6 i	AFT	056103419A	8.0	12.06	36.5	G	B
8054.701	IN-EX	CORDOBA Vario (6K5), 1.6 i	ALM/AEE	056103419A	8.0	12.06	36.5	G	B
8052.701	IN-EX	CORDOBA Vario (6K5), 1.9 SDI	AEY	0371034188	7.0	12.06	36.4	G	B
8052.701	IN-EX	CORDOBA Vario (6K5), 1.9 SDI	AQM/AGP	0371034188	7.0	12.06	36.4	G	B
8052.701	IN-EX	CORDOBA Vario (6K5), 1.9 TDI	1Z/AHU	0371034188	7.0	12.06	36.4	G	B
8054.701	IN-EX	CORDOBA Vario (6K5), 1.9 TDI	1Z/AHU	056103419A	8.0	12.06	36.5	G	B
8052.701	IN-EX	CORDOBA Vario (6K5), 1.9 TDI	AFN	0371034188	7.0	12.06	36.4	G	B
8052.701	IN-EX	CORDOBA Vario (6K5), 1.9 TDI	AGR/ALH	0371034188	7.0	12.06	36.4	G	B
8052.701	IN-EX	CORDOBA Vario (6K5), 1.9 TDI	ASK/ASV	0371034188	7.0	12.06	36.4	G	B
8054.701	IN-EX	FURA (025A), 0.9	HB 90	056103419A	8.0	12.06	36.5	G	B
8062.701	IN-EX	IBIZA 1.4	AEX / AKV	032103419A	7.0	11.07	33.0	G	B
8062.701	IN-EX	IBIZA 1.6	AEE	032103419A	7.0	11.07	33.0	G	B
8062.701	IN-EX	IBIZA 1.6	ALM	032103419A	7.0	11.07	33.0	G	B
8078.601	IN-EX	IBIZA 1.8i 16V	ABF	027103415	7.0	12.06	38.0	F	B
8064.701	IN-EX	IBIZA 1.8i 16V	ABF	027103419	7.0	12.06	38.0	G	B
8054.701	IN-EX	IBIZA II (6K1), 1.0	AAU	056103419A	8.0	12.06	36.5	G	B
8054.701	IN-EX	IBIZA II (6K1), 1.3 i	2G/AAV	056103419A	8.0	12.06	36.5	G	B
8054.701	IN-EX	IBIZA II (6K1), 1.4 i	AEX/AKV/ABD/APQ	056103419A	8.0	12.06	36.5	G	B
8054.701	IN-EX	IBIZA II (6K1), 1.6 i	1F	056103419A	8.0	12.06	36.5	G	B
8054.701	IN-EX	IBIZA II (6K1), 1.6 i	AFT	056103419A	8.0	12.06	36.5	G	B
8054.701	IN-EX	IBIZA II (6K1), 1.8 i	ACC/ADZ/ABS	056103419A	8.0	12.06	36.5	G	B
8054.701	IN-EX	IBIZA II (6K1), 1.9 D	1Y	056103419A	8.0	12.06	36.5	G	B
8054.701	IN-EX	IBIZA II (6K1), 1.9 D	1Y	056103419A	8.0	12.06	36.5	G	B
8052.701	IN-EX	IBIZA II (6K1), 1.9 SDI	AEY	0371034188	7.0	12.06	36.4	G	B
8054.701	IN-EX	IBIZA II (6K1), 1.9 TD	AAZ	056103419A	8.0	12.06	36.5	G	B
8052.701	IN-EX	IBIZA II (6K1), 1.9 TDI	1Z/AHU	0371034188	7.0	12.06	36.4	G	B
8054.701	IN-EX	IBIZA II (6K1), 1.9 TDI	1Z/AHU	056103419A	8.0	12.06	36.5	G	B
8052.701	IN-EX	IBIZA II (6K1), 1.9 TDI	AFN	0371034188	7.0	12.06	36.4	G	B
8052.701	IN-EX	IBIZA II (6K1), 2.0 i	2E/AGG	0371034188	7.0	12.06	36.4	G	B
8052.701	IN-EX	IBIZA II (6K1), 2.0 i 16V	ABF	0371034188	7.0	12.06	36.4	G	B
8052.701	IN-EX	IBIZA III (6K1), 1.6	AKL/APF/AEH/AUR	0371034188	7.0	12.06	36.4	G	B
8052.701	IN-EX	IBIZA III (6K1), 1.9 SDI	AQM/AGP	0371034188	7.0	12.06	36.4	G	B
8052.701	IN-EX	IBIZA III (6K1), 1.9 TDI	AGR/ALH	0371034188	7.0	12.06	36.4	G	B
8052.701	IN-EX	IBIZA III (6K1), 1.9 TDI	ASK/ASV	0371034188	7.0	12.06	36.4	G	B
8052.701	IN-EX	IBIZA IV (6L1), 1.4 TDI	AMF	0371034188	7.0	12.06	36.4	G	B
8052.701	IN-EX	IBIZA IV (6L1), 1.9 SDI	ASY	0371034188	7.0	12.06	36.4	G	B
8052.701	IN-EX	IBIZA IV (6L1), 1.9 TDI	BLT/ASZ	0371034188	7.0	12.06	36.4	G	B
8052.701	IN-EX	IBIZA IV (6L1), 1.9 TDI	BMT/AXR/ATD	0371034188	7.0	12.06	36.4	G	B
8054.701	IN-EX	INCA (6K9), 1.6 i	1F	056103419A	8.0	12.06	36.5	G	B
8052.701	IN-EX	INCA (6K9), 1.7 D	AHB	0371034188	7.0	12.06	36.4	G	B
8054.701	IN-EX	INCA (6K9), 1.9 D	1Y	056103419A	8.0	12.06	36.5	G	B
8052.701	IN-EX	INCA (6K9), 1.9 SDI	AYQ/AEY	0371034188	7.0	12.06	36.4	G	B
8052.701	IN-EX	INCA (6K9), 1.9 TDI	ALH	0371034188	7.0	12.06	36.4	G	B
8054.701	IN-EX	INCA (6K9), 1.9 TDI	ALH	056103419A	8.0	12.06	36.5	G	B
8062.701	IN-EX	INCA 1.4i	AEX / AKV	032103419A	7.0	11.07	33.0	G	B
8062.701	IN-EX	INCA 1.6	AEE	032103419A	7.0	11.07	33.0	G	B
8052.701	IN-EX	LEON (1M1), 1.6	AKL/APF/AEH	0371034188	7.0	12.06	36.4	G	B
8052.701	IN-EX	LEON (1M1), 1.9 SDI	AQM	0371034188	7.0	12.06	36.4	G	B
8052.701	IN-EX	LEON (1M1), 1.9 TDI	AGR/ALH	0371034188	7.0	12.06	36.4	G	B
8052.701	IN-EX	LEON (1M1), 1.9 TDI	AHF/ASV	0371034188	7.0	12.06	36.4	G	B
8052.701	IN-EX	LEON (1M1), 1.9 TDI	ARL	0371034188	7.0	12.06	36.4	G	B
8052.701	IN-EX	LEON (1M1), 1.9 TDI	ASZ	0371034188	7.0	12.06	36.4	G	B
8052.701	IN-EX	LEON (1M1), 1.9 TDI	AXR	0371034188	7.0	12.06	36.4	G	B
8052.701	IN-EX	LEON (1M1), 1.9 TDI Syncro	ARL	0371034188	7.0	12.06	36.4	G	B
8037.601	IN-EX	LEON (1P1), 1.6 LPG	CHGA		6.0	12.06	36.4	F	B
8052.701	IN-EX	LEON (1P1), 1.9 TDI	BXE/BKC/BLS	0371034188	7.0	12.06	36.4	G	B
8170.601	IN-EX	LEON (1P1), 2.0 TDI	AZV		6.0	10.06	42.0	F	B
8170.601	IN-EX	LEON (1P1), 2.0 TDI	BMM		6.0	10.06	42.0	F	B
8170.601	IN-EX	LEON (1P1), 2.0 TDI	CEGA/BMN/CFJA		6.0	10.06	42.0	F	B

(D1) Internal diameter, (D2) External diameter, (B) Shape, (C) Material

VALVE GUIDES

IVT Ref.	Type	Model	Engine	OEM Ref.	D1	D2	Length	B	C
SEAT									
8170.601	IN-EX	LEON (1P1), 2.0 TDI 16V	CFHC/CLCB/BKD		6.0	10.06	42.0	F	B
8054.701	IN-EX	TERRA (24), 1.3 D	MN	056103419A	8.0	12.06	36.5	G	B
8054.701	IN-EX	TERRA (24), 1.4 D	1 W	056103419A	8.0	12.06	36.5	G	B
8054.701	IN-EX	TERRA Kasten (024A), 1.3 D	MN	056103419A	8.0	12.06	36.5	G	B
8054.701	IN-EX	TERRA Kasten (024A), 1.4 D	1 W	056103419A	8.0	12.06	36.5	G	B
8062.701	IN-EX	TOLEDO 1.6	AEE	032103419A	7.0	11.07	33.0	G	B
8078.601	IN-EX	TOLEDO 1.8i GT 16V	ABF	027103415	7.0	12.06	38.0	F	B
8064.701	IN-EX	TOLEDO 1.8i GT 16V	ABF	027103419	7.0	12.06	38.0	G	B
8054.701	IN-EX	TOLEDO I (1L), 1.6 i	1F	056103419A	8.0	12.06	36.5	G	B
8054.701	IN-EX	TOLEDO I (1L), 1.6 i	1F	056103419A	8.0	12.06	36.5	G	B
8054.701	IN-EX	TOLEDO I (1L), 1.6 i	AFT	056103419A	8.0	12.06	36.5	G	B
8054.701	IN-EX	TOLEDO I (1L), 1.6 i	EZ/ABN/1F	056103419A	8.0	12.06	36.5	G	B
8054.701	IN-EX	TOLEDO I (1L), 1.8 i	ACC/ADZ/ABS	056103419A	8.0	12.06	36.5	G	B
8054.701	IN-EX	TOLEDO I (1L), 1.8 i	RP	056103419A	8.0	12.06	36.5	G	B
8054.701	IN-EX	TOLEDO I (1L), 1.9 D	1Y	056103419A	8.0	12.06	36.5	G	B
8054.701	IN-EX	TOLEDO I (1L), 1.9 D	1Y	056103419A	8.0	12.06	36.5	G	B
8054.701	IN-EX	TOLEDO I (1L), 1.9 TD	AAZ	056103419A	8.0	12.06	36.5	G	B
8052.701	IN-EX	TOLEDO I (1L), 1.9 TDI	1Z/AHU	0371034188	7.0	12.06	36.4	G	B
8054.701	IN-EX	TOLEDO I (1L), 1.9 TDI	1Z/AHU	056103419A	8.0	12.06	36.5	G	B
8052.701	IN-EX	TOLEDO I (1L), 1.9 TDI	AFN	0371034188	7.0	12.06	36.4	G	B
8052.701	IN-EX	TOLEDO I (1L), 2.0 i	2E/AGG	0371034188	7.0	12.06	36.4	G	B
8052.701	IN-EX	TOLEDO I (1L), 2.0 i 16V	ABF	0371034188	7.0	12.06	36.4	G	B
8052.701	IN-EX	TOLEDO II (1M2), 1.6	AKL/APF/AEH	0371034188	7.0	12.06	36.4	G	B
8052.701	IN-EX	TOLEDO II (1M2), 1.9 TDI	AGR/ALH	0371034188	7.0	12.06	36.4	G	B
8052.701	IN-EX	TOLEDO II (1M2), 1.9 TDI	AHF/ASV	0371034188	7.0	12.06	36.4	G	B
8052.701	IN-EX	TOLEDO II (1M2), 1.9 TDI	ARL	0371034188	7.0	12.06	36.4	G	B
8052.701	IN-EX	TOLEDO II (1M2), 1.9 TDI	ASZ	0371034188	7.0	12.06	36.4	G	B
8037.601	IN-EX	TOLEDO III (5P2), 1.6	BGU/CCSA/BSF/BSE		6.0	12.06	36.4	F	B
8052.701	IN-EX	TOLEDO III (5P2), 1.9 TDI	BXE/BKC/BJB/BLS	0371034188	7.0	12.06	36.4	G	B
8170.601	IN-EX	TOLEDO III (5P2), 2.0 TDI	BMM		6.0	10.06	42.0	F	B
8170.601	IN-EX	TOLEDO III (5P2), 2.0 TDI 16V	BKD		6.0	10.06	42.0	F	B
SKODA									
8052.701	IN-EX	FABIA (6Y2), 1.4 TDI	AMF	0371034188	7.0	12.06	36.4	G	B
8052.701	IN-EX	FABIA (6Y2), 1.9 SDI	ASY	0371034188	7.0	12.06	36.4	G	B
8052.701	IN-EX	FABIA (6Y2), 1.9 TDI	AXR/ATD	0371034188	7.0	12.06	36.4	G	B
8052.701	IN-EX	FABIA (6Y2), 1.9 TDI RS	BLT/ASZ	0371034188	7.0	12.06	36.4	G	B
8052.701	IN-EX	FABIA (6Y2), 2.0	AZL	0371034188	7.0	12.06	36.4	G	B
8052.701	IN-EX	FABIA Combi (6Y5), 1.4 TDI	AMF	0371034188	7.0	12.06	36.4	G	B
8052.701	IN-EX	FABIA Combi (6Y5), 1.9 SDI	ASY	0371034188	7.0	12.06	36.4	G	B
8052.701	IN-EX	FABIA Combi (6Y5), 1.9 TDI	AXR/ATD	0371034188	7.0	12.06	36.4	G	B
8052.701	IN-EX	FABIA Combi (6Y5), 2.0	AZL	0371034188	7.0	12.06	36.4	G	B
8052.701	IN-EX	FABIA Combi, 1.9 TDI	BSW/BLS	0371034188	7.0	12.06	36.4	G	B
8052.701	IN-EX	FABIA Praktik, 1.9 SDI	ASY	0371034188	7.0	12.06	36.4	G	B
8052.701	IN-EX	FABIA Stufenheck (6Y3), 1.4 TDI	AMF	0371034188	7.0	12.06	36.4	G	B
8052.701	IN-EX	FABIA Stufenheck (6Y3), 1.9 SDI	ASY	0371034188	7.0	12.06	36.4	G	B
8052.701	IN-EX	FABIA Stufenheck (6Y3), 1.9 TDI	AXR/ATD	0371034188	7.0	12.06	36.4	G	B
8052.701	IN-EX	FABIA Stufenheck (6Y3), 2.0	AZL	0371034188	7.0	12.06	36.4	G	B
8052.701	IN-EX	FABIA, 1.9 TDI	BSW/BLS	0371034188	7.0	12.06	36.4	G	B
8062.701	IN-EX	FELICIA 1.6	AEE	032103419A	7.0	11.07	33.0	G	B
8054.701	IN-EX	FELICIA I (6U1), 1.9 D	AEF	056103419A	8.0	12.06	36.5	G	B
8054.701	IN-EX	FELICIA I Fun (797), 1.9 D	AEF	056103419A	8.0	12.06	36.5	G	B
8054.701	IN-EX	FELICIA I Kombi (6U5), 1.9 D	AEF	056103419A	8.0	12.06	36.5	G	B
8054.701	IN-EX	FELICIA II (6U1), 1.9 D	AEF	056103419A	8.0	12.06	36.5	G	B
8054.701	IN-EX	FELICIA II Kombi (6U5), 1.9 D	AEF	056103419A	8.0	12.06	36.5	G	B
8052.701	IN-EX	OCTAVIA (1U2), 1.6	AKL/AEH	0371034188	7.0	12.06	36.4	G	B
8037.601	IN-EX	OCTAVIA (1U2), 1.6	AVU/BFQ		6.0	12.06	36.4	F	B
8052.701	IN-EX	OCTAVIA (1U2), 1.9 SDI	AQM/AGP	0371034188	7.0	12.06	36.4	G	B
8052.701	IN-EX	OCTAVIA (1U2), 1.9 TDI	AGR/ALH	0371034188	7.0	12.06	36.4	G	B
8052.701	IN-EX	OCTAVIA (1U2), 1.9 TDI	AHF/ASV	0371034188	7.0	12.06	36.4	G	B
8052.701	IN-EX	OCTAVIA (1U2), 1.9 TDI	ASZ	0371034188	7.0	12.06	36.4	G	B
8052.701	IN-EX	OCTAVIA (1U2), 1.9 TDI	AXR	0371034188	7.0	12.06	36.4	G	B

(D1) Internal diameter, (D2) External diameter, (B) Shape, (C) Material

VALVE GUIDES

IVT Ref.	Type	Model	Engine	OEM Ref.	D1	D2	Length	B	C
SKODA									
8052.701	IN-EX	OCTAVIA (1U2), 2.0	APK/AZH/AZJ/AQY/AEG	0371034188	7.0	12.06	36.4	G	B
8037.601	IN-EX	OCTAVIA (1Z3), 1.6	BGU/CCSA/BSF/CMXA/BSE		6.0	12.06	36.4	F	B
8037.601	IN-EX	OCTAVIA (1Z3), 1.6 MultiFuel	CCSA/CMXA		6.0	12.06	36.4	F	B
8052.701	IN-EX	OCTAVIA (1Z3), 1.9 TDI	BXE/BKC/BJB/BLS	0371034188	7.0	12.06	36.4	G	B
8170.601	IN-EX	OCTAVIA (1Z3), 2.0 TDI	BMM		6.0	10.06	42.0	F	B
8170.601	IN-EX	OCTAVIA (1Z3), 2.0 TDI	CLCA/CFHF		6.0	10.06	42.0	F	B
8170.601	IN-EX	OCTAVIA (1Z3), 2.0 TDI 16V	CFHC/CLCB/BKD		6.0	10.06	42.0	F	B
8062.701	IN-EX	OCTAVIA 1.6	AEE	032103419A	7.0	11.07	33.0	G	B
8052.701	IN-EX	OCTAVIA Combi (1U5), 1.6	AKL/AEH	0371034188	7.0	12.06	36.4	G	B
8037.601	IN-EX	OCTAVIA Combi (1U5), 1.6	AVU/BFQ		6.0	12.06	36.4	F	B
8052.701	IN-EX	OCTAVIA Combi (1U5), 1.9 SDI	AQM/AGP	0371034188	7.0	12.06	36.4	G	B
8052.701	IN-EX	OCTAVIA Combi (1U5), 1.9 TDI	AGR/ALH	0371034188	7.0	12.06	36.4	G	B
8052.701	IN-EX	OCTAVIA Combi (1U5), 1.9 TDI	AHF/ASV	0371034188	7.0	12.06	36.4	G	B
8052.701	IN-EX	OCTAVIA Combi (1U5), 1.9 TDI	ASZ	0371034188	7.0	12.06	36.4	G	B
8052.701	IN-EX	OCTAVIA Combi (1U5), 1.9 TDI	AXR	0371034188	7.0	12.06	36.4	G	B
8052.701	IN-EX	OCTAVIA Combi (1U5), 1.9 TDI 4	AGR	0371034188	7.0	12.06	36.4	G	B
8052.701	IN-EX	OCTAVIA Combi (1U5), 1.9 TDI 4	ATD	0371034188	7.0	12.06	36.4	G	B
8052.701	IN-EX	OCTAVIA Combi (1U5), 2.0	APK/AZH/AZJ/AQY/AEG	0371034188	7.0	12.06	36.4	G	B
8052.701	IN-EX	OCTAVIA Combi (1U5), 2.0 4x4	ATF	0371034188	7.0	12.06	36.4	G	B
8052.701	IN-EX	OCTAVIA Combi (1U5), 2.0 4x4	AZH/AZJ	0371034188	7.0	12.06	36.4	G	B
8037.601	IN-EX	OCTAVIA Combi (1Z5), 1.6	BGU/CCSA/BSF/CMXA/BSE		6.0	12.06	36.4	F	B
8037.601	IN-EX	OCTAVIA Combi (1Z5), 1.6 MultiF	CCSA/CMXA		6.0	12.06	36.4	F	B
8052.701	IN-EX	OCTAVIA Combi (1Z5), 1.9 TDI	BXE/BKC/BJB/BLS	0371034188	7.0	12.06	36.4	G	B
8052.701	IN-EX	OCTAVIA Combi (1Z5), 1.9 TDI 4	BXE/BKC/BLS	0371034188	7.0	12.06	36.4	G	B
8170.601	IN-EX	OCTAVIA Combi (1Z5), 2.0 TDI	BMM		6.0	10.06	42.0	F	B
8170.601	IN-EX	OCTAVIA Combi (1Z5), 2.0 TDI	CLCA/CFHF		6.0	10.06	42.0	F	B
8170.601	IN-EX	OCTAVIA Combi (1Z5), 2.0 TDI 1	CFHC/CLCB/BKD		6.0	10.06	42.0	F	B
8170.601	IN-EX	OCTAVIA Combi (1Z5), 2.0 TDI 1	CFHC		6.0	10.06	42.0	F	B
8170.601	IN-EX	OCTAVIA Combi (1Z5), 2.0 TDI 4	BMM		6.0	10.06	42.0	F	B
8170.601	IN-EX	OCTAVIA Combi (1Z5), 2.0 TDI 4	CFHF		6.0	10.06	42.0	F	B
8052.701	IN-EX	ROOMSTER (5J), 1.9 TDI	BSW/BLS	0371034188	7.0	12.06	36.4	G	B
8052.701	IN-EX	SUPERB (3U4), 1.9 TDI	AVB	0371034188	7.0	12.06	36.4	G	B
8052.701	IN-EX	SUPERB (3U4), 1.9 TDI	AWX/AVF	0371034188	7.0	12.06	36.4	G	B
8052.701	IN-EX	SUPERB (3U4), 2.0	AZM	0371034188	7.0	12.06	36.4	G	B
8170.601	IN-EX	SUPERB (3U4), 2.0 TDI	BSS		6.0	10.06	42.0	F	B
8170.601	IN-EX	SUPERB (3U4), 2.5 TDI	AYM		6.0	10.06	42.0	F	B
8128.601	IN-EX	SUPERB (3U4), 2.5 TDI	BDG		6.0	10.06	36.0	F	B
SMART									
8183.605	IN-EX	CABRIO (450), 0.7 (450.433)	M 160.910		6.0	11.56	34.4	F	S06
8183.605	IN-EX	CABRIO (450), 0.7 (450.452, 450.	M 160.910		6.0	11.56	34.4	F	S06
8183.605	IN-EX	CITY-COUPE (450), 0.7 (450.330)	M 160.910		6.0	11.56	34.4	F	S06
8183.605	IN-EX	CITY-COUPE (450), 0.7 (450.333)	M 160.910		6.0	11.56	34.4	F	S06
8183.605	IN-EX	CITY-COUPE (450), 0.7 (450.352,	M 160.910		6.0	11.56	34.4	F	S06
8183.605	IN-EX	FORFOUR (454), 1.5 CDI (454.00	OM 639.939		6.0	11.56	34.4	F	S06
8183.605	IN-EX	FORFOUR (454), 1.5 CDI (454.00	OM 639.939		6.0	11.56	34.4	F	S06
8183.605	IN-EX	FORTWO Cabrio (450), 0.7 (450.4	M 160.910		6.0	11.56	34.4	F	S06
8183.605	IN-EX	FORTWO Cabrio (450), 0.7 (450.4	M 160.910		6.0	11.56	34.4	F	S06
8183.605	IN-EX	FORTWO Coupe (450), 0.7 (450.3	M 160.910		6.0	11.56	34.4	F	S06
8183.605	IN-EX	FORTWO Coupe (450), 0.7 (450.3	M 160.910		6.0	11.56	34.4	F	S06
8183.605	IN-EX	FORTWO Coupe (450), 0.7 (450.3	M 160.910		6.0	11.56	34.4	F	S06
8183.605	IN-EX	ROADSTER (452), 0.7 (452.432)	M 160.921		6.0	11.56	34.4	F	S06
8183.605	IN-EX	ROADSTER (452), 0.7 (452.434)	M 160.922		6.0	11.56	34.4	F	S06
8183.605	IN-EX	ROADSTER (452), 0.7 Brabus (45	M 160.923		6.0	11.56	34.4	F	S06
8183.605	IN-EX	ROADSTER Coupe (452), 0.7 (45	M 160.922		6.0	11.56	34.4	F	S06
8183.605	IN-EX	ROADSTER Coupe (452), 0.7 (45	M 160.921		6.0	11.56	34.4	F	S06
8183.605	IN-EX	ROADSTER Coupe (452), 0.7 Bra	M 160.923		6.0	11.56	34.4	F	S06
SSANGYONG									
8168.600	IN	KORANDO (KJ), 2.3 D (KJ)	OM 601.940	6010500624	8.0	14.03	39.5	F-1	G
8168.600	IN	KORANDO (KJ), 2.3 D (KJ)	OM 601.940	6010500824	8.0	14.03	39.5	F-1	G
8168.600	IN	KORANDO (KJ), 2.9 D (KJ)	MB-OM 662	6010500624	8.0	14.03	39.5	F-1	G

(D1) Internal diameter, (D2) External diameter, (B) Shape, (C) Material

VALVE GUIDES

IVT Ref.	Type	Model	Engine	OEM Ref.	D1	D2	Length	B	C
SSANGYONG									
8168.600	IN	KORANDO (KJ), 2.9 D (KJ)	MB-OM 662	6010500824	8.0	14.03	39.5	F-1	G
8168.600	IN	KORANDO (KJ), 2.9 TD	-	6010500624	8.0	14.03	39.5	F-1	G
8168.600	IN	KORANDO (KJ), 2.9 TD	-	6010500824	8.0	14.03	39.5	F-1	G
8185.600	IN-EX	KORANDO (KJ), 3.2	M 104.995	1110531029	7.0	12.56	37.5	F	G1
8185.600	IN-EX	KORANDO (KJ), 3.2	M 104.995	6060530230	7.0	12.56	37.5	F	G1
8185.600	IN-EX	KORANDO (KJ), 3.2 (KJ)	M 104.995	1110531029	7.0	12.56	37.5	F	G1
8185.600	IN-EX	KORANDO (KJ), 3.2 (KJ)	M 104.995	6060530230	7.0	12.56	37.5	F	G1
8168.600	IN	KORANDO Cabrio (KJ), 2.9 D	MB-OM 662	6010500624	8.0	14.03	39.5	F-1	G
8168.600	IN	KORANDO Cabrio (KJ), 2.9 D	MB-OM 662	6010500824	8.0	14.03	39.5	F-1	G
8168.600	IN	KORANDO Cabrio (KJ), 2.9 TD	-	6010500624	8.0	14.03	39.5	F-1	G
8168.600	IN	KORANDO Cabrio (KJ), 2.9 TD	-	6010500824	8.0	14.03	39.5	F-1	G
8185.600	IN-EX	KORANDO Cabrio (KJ), 3.2	M 104.995	1110531029	7.0	12.56	37.5	F	G1
8185.600	IN-EX	KORANDO Cabrio (KJ), 3.2	M 104.995	6060530230	7.0	12.56	37.5	F	G1
8185.600	IN-EX	MUSSO (FJ), 2.0	E20	1110531029	7.0	12.56	37.5	F	G1
8185.600	IN-EX	MUSSO (FJ), 2.0	E20	6060530230	7.0	12.56	37.5	F	G1
8185.600	IN-EX	MUSSO (FJ), 2.3	M 111.970	1110531029	7.0	12.56	37.5	F	G1
8185.600	IN-EX	MUSSO (FJ), 2.3	M 111.970	6060530230	7.0	12.56	37.5	F	G1
8168.600	IN	MUSSO (FJ), 2.3 D	OM 601.940/MB-OM 661	6010500624	8.0	14.03	39.5	F-1	G
8168.600	IN	MUSSO (FJ), 2.3 D	OM 601.940/MB-OM 661	6010500824	8.0	14.03	39.5	F-1	G
8168.600	IN	MUSSO (FJ), 2.9 D	MB-OM 662	6010500624	8.0	14.03	39.5	F-1	G
8168.600	IN	MUSSO (FJ), 2.9 D	MB-OM 662	6010500824	8.0	14.03	39.5	F-1	G
8168.600	IN	MUSSO (FJ), 2.9 TD	-	6010500624	8.0	14.03	39.5	F-1	G
8168.600	IN	MUSSO (FJ), 2.9 TD	-	6010500824	8.0	14.03	39.5	F-1	G
8185.600	IN-EX	MUSSO (FJ), 3.2	M 104.992	1110531029	7.0	12.56	37.5	F	G1
8185.600	IN-EX	MUSSO (FJ), 3.2	M 104.992	6060530230	7.0	12.56	37.5	F	G1
8168.600	IN	MUSSO SPORTS, 2.9 D 4x4	-	6010500624	8.0	14.03	39.5	F-1	G
8168.600	IN	MUSSO SPORTS, 2.9 D 4x4	-	6010500824	8.0	14.03	39.5	F-1	G
8168.600	IN	REXTON (GAB_), 2.9 TD	-	6010500624	8.0	14.03	39.5	F-1	G
8168.600	IN	REXTON (GAB_), 2.9 TD	-	6010500824	8.0	14.03	39.5	F-1	G
STEYR-DAIMLER-PUCH									
8092.602	IN	200 GE 4 x 4	M102 (102.964)	1020501724	8.0	14.04	46.0	F-1	Cu
8081.602	EX	200 GE 4 x 4	M102 (102.964)	1020501824	9.0	14.04	51.0	F-1	Cu
8081.602	EX	230 GE 4 x 4	M102 (102.958/.987)	1020501824	9.0	14.04	51.0	F-1	Cu
8081.602	EX	230 GE 4 x 4	M102 (102.981/.988)	1020501824	9.0	14.04	51.0	F-1	Cu
SUBARU									
8187.905	IN-EX	JUSTY III (G3X), 1.5	M15A	1111554G00001	5.5	10.6	40.0	P-6	S03
8014.605	IN-EX	Trezia 1.3	1NR-FE	1112231041	5.5	10.33	43.5	F	S06
8188.904	IN-EX	TREZIA, 1.4 D	1ND-TV	1112230020	6.0	11.09	40.6	P	S03
8188.904	IN-EX	TREZIA, 1.4 D	1ND-TV	1112233030	6.0	11.09	40.6	P	S03
SUZUKI									
8167.604	IN-EX	ALTO (HA25, HA35), 1.0	K10B	11115M68K00	5.5	10.6	34.0	F	S03
8178.601	IN-EX	BALENO (EG), 1.9 TD	DHW (XUD9SD)/DHV (XUD9		8.0	14.05	48.0	F	B
8178.601	IN-EX	BALENO Kombi (EG), 1.9 TD	-		8.0	14.05	48.0	F	B
8178.601	IN-EX	BALENO Schrägheck (EG), 1.9 T	DHW (XUD9SD)/DHV (XUD9		8.0	14.05	48.0	F	B
8167.604	IN-EX	CAPPUCINO (EA), 0.7 (EA11)	F6A	11115M68K00	5.5	10.6	34.0	F	S03
8187.905	IN-EX	GRAND VITARA II (JT), 1.6 Allrad	M16A	1111554G00	5.5	10.6	40.0	P-6	S03
8187.905	IN-EX	IGNIS II, 1.5	M15A	1111554G00	5.5	10.6	40.0	P-6	S03
8187.905	IN-EX	IGNIS II, 1.5 4x4	M15A	1111554G00	5.5	10.6	40.0	P-6	S03
8187.905	IN-EX	IGNIS II, 1.5 Sport	M15A	1111554G00	5.5	10.6	40.0	P-6	S03
8035.601	IN-EX	JIMNY (FJ), 1.5 DDiS 4WD	K9K 700		6.0	11.07	40.5	F	B
8035.601	IN-EX	JIMNY (FJ), 1.5 DDiS 4x4	K9K 266		6.0	11.07	40.5	F	B
8165.104	IN-EX	LIANA (ER), 1.4 DDiS	8HY	0220A6	5.5	9.55	34.0	A	S03
8187.905	IN-EX	LIANA (ER), 1.6	M16A	1111554G00	5.5	10.6	40.0	P-6	S03
8187.905	IN-EX	LIANA (ER), 1.6	M16A	1111554G00	5.5	10.6	40.0	P-6	S03
8187.905	IN-EX	LIANA (ER), 1.6 4WD	M16A	1111554G00	5.5	10.6	40.0	P-6	S03
8187.905	IN-EX	LIANA (ER), 1.6 4WD	M16A	1111554G00	5.5	10.6	40.0	P-6	S03
8187.905	IN-EX	LIANA (ER), 1.6 4WD	M16A	1111554G00	5.5	10.6	40.0	P-6	S03
8187.905	IN-EX	LIANA (ER), 1.6 i	M16A	1111554G00	5.5	10.6	40.0	P-6	S03
8165.104	IN-EX	LIANA Kombi (ER), 1.4 DDiS	8HY	0220A6	5.5	9.55	34.0	A	S03

(D1) Internal diameter, (D2) External diameter, (B) Shape, (C) Material

VALVE GUIDES

IVT Ref.	Type	Model	Engine	OEM Ref.	D1	D2	Length	B	C
SUZUKI									
8187.905	IN-EX	LIANA Kombi (ER), 1.6	M16A	1111554G00	5.5	10.6	40.0	P-6	S03
8187.905	IN-EX	LIANA Kombi (ER), 1.6 4WD	M16A	1111554G00	5.5	10.6	40.0	P-6	S03
8187.905	IN-EX	LIANA Kombi (ER), 1.6 4WD	M16A	1111554G00	5.5	10.6	40.0	P-6	S03
8187.905	IN-EX	LIANA Kombi (ER), 1.6 4WD	M16A	1111554G00	5.5	10.6	40.0	P-6	S03
8187.905	IN-EX	LIANA Kombi (ER), 1.6 i	M16A	1111554G00	5.5	10.6	40.0	P-6	S03
8178.601	IN-EX	SAMURAI (SJ), 1.9 TD	1WZ		8.0	14.05	48.0	F	B
8178.601	IN-EX	SAMURAI (SJ), 1.9 TD	XUD9		8.0	14.05	48.0	F	B
8167.604	IN-EX	SPLASH, 1.0	K10B	11115M68K00	5.5	10.6	34.0	F	S03
8167.604	IN-EX	SPLASH, 1.0	K10B	11115M68K00	5.5	10.6	34.0	F	S03
8167.604	IN-EX	SPLASH, 1.2	K12B	11115M68K00	5.5	10.6	34.0	F	S03
8187.905	IN-EX	SWIFT III (MZ, EZ), 1.5	M15A	1111554G00	5.5	10.6	40.0	P-6	S03
8187.905	IN-EX	SWIFT III (MZ, EZ), 1.6	M16A	1111554G00	5.5	10.6	40.0	P-6	S03
8187.905	IN-EX	SX4 (EY, GY), 1.5	M15A	1111554G00	5.5	10.6	40.0	P-6	S03
8187.905	IN-EX	SX4 (EY, GY), 1.5 VVT	M15A	1111554G00	5.5	10.6	40.0	P-6	S03
8187.905	IN-EX	SX4 (EY, GY), 1.5 VVT 4x4	M15A	1111554G00	5.5	10.6	40.0	P-6	S03
8165.104	IN-EX	SX4 (EY, GY), 1.6 DDIS	9HX	0220A6	5.5	9.55	34.0	A	S03
8187.905	IN-EX	SX4 (EY, GY), 1.6 VVT	M16A	1111554G00	5.5	10.6	40.0	P-6	S03
8187.905	IN-EX	SX4 (EY, GY), 1.6 VVT	M16A	1111554G00	5.5	10.6	40.0	P-6	S03
8187.905	IN-EX	SX4 (EY, GY), 1.6 VVT 4x4	M16A	1111554G00	5.5	10.6	40.0	P-6	S03
8187.905	IN-EX	SX4 (EY, GY), 1.6 VVT 4x4	M16A	1111554G00	5.5	10.6	40.0	P-6	S03
8187.905	IN-EX	SX4 (EY, GY), 1.6 VVT 4x4	M16A	1111554G00	5.5	10.6	40.0	P-6	S03
8187.905	IN-EX	SX4 S-Cross, 1.6	M16A	1111554G00	5.5	10.6	40.0	P-6	S03
8165.104	IN-EX	SX4 S-Cross, 1.6 DDiS	D16AA	0220A6	5.5	9.55	34.0	A	S03
8165.104	IN-EX	SX4 S-Cross, 1.6 DDiS AllGrip	D16AA	0220A6	5.5	9.55	34.0	A	S03
8187.905	IN-EX	SX4 Stufenheck (GY), 1.6	M16A	1111554G00	5.5	10.6	40.0	P-6	S03
8187.905	IN-EX	SX4 Stufenheck (GY), 1.6	M16A	1111554G00	5.5	10.6	40.0	P-6	S03
8187.905	IN-EX	SX4 Stufenheck (GY), 1.6 AWD	M16A	1111554G00	5.5	10.6	40.0	P-6	S03
TOYOTA									
8188.904	IN-EX	AURIS (NRE15_, ZZE15_, ADE15	1ND-TV	1112230020	6.0	11.09	40.6	P	S03
8188.904	IN-EX	AURIS (NRE15_, ZZE15_, ADE15	1ND-TV	1112233030	6.0	11.09	40.6	P	S03
8152.900	IN-EX	AURIS (NRE15_, ZZE15_, ADE15	4ZZ-FE	1112220020	5.5	10.34	34.5	P	G
8152.900	IN-EX	AURIS (NRE15_, ZZE15_, ADE15	4ZZ-FE	1112222030	5.5	10.34	34.5	P	G
8152.900	IN-EX	AURIS (NRE15_, ZZE15_, ADE15	1ZR-FE	1112220020	5.5	10.34	34.5	P	G
8152.900	IN-EX	AURIS (NRE15_, ZZE15_, ADE15	1ZR-FE	1112222030	5.5	10.34	34.5	P	G
8014.605	IN-EX	Auris 1.3	1NR-FE	1112231041	5.5	10.33	43.5	F	S06
8014.605	IN-EX	Auris 1.3 Dual WTi	1NR-FE	1112231041	5.5	10.33	43.5	F	S06
8011.904	IN-EX	Auris 2.0 D-4D	1AD-FTV	111220R010	6.0	11.04	40.6	P	S03
8011.904	IN-EX	Auris 2.0 D-4D	1AD-FTV	1112227010	6.0	11.04	40.6	P	S03
8011.904	IN-EX	Auris 2.2 D	2AD-FHV	111220R010	6.0	11.04	40.6	P	S03
8011.904	IN-EX	Auris 2.2 D	2AD-FHV	1112227010	6.0	11.04	40.6	P	S03
8014.605	IN-EX	Auris Touring Sports 1.3	1NR-FE	1112231041	5.5	10.33	43.5	F	S06
8011.904	IN-EX	Auris Touring Sports 2.0 D-4D	1AD-FTV	111220R010	6.0	11.04	40.6	P	S03
8011.904	IN-EX	Auris Touring Sports 2.0 D-4D	1AD-FTV	1112227010	6.0	11.04	40.6	P	S03
8153.900	IN-EX	AVENSIS (_T22_), 1.6 (AT220_)	4A-FE	1112215030	6.0	11.05	38.4	P	G
8153.900	IN-EX	AVENSIS (_T22_), 1.6 (AT220_)	4A-FE	1112215030	6.0	11.05	38.4	P	G
8152.900	IN-EX	AVENSIS (_T22_), 1.6 VVT-i	3ZZ-FE	1112220020	5.5	10.34	34.5	P	G
8152.900	IN-EX	AVENSIS (_T22_), 1.6 VVT-i	3ZZ-FE	1112222030	5.5	10.34	34.5	P	G
8153.900	IN-EX	AVENSIS (_T22_), 1.8 (AT221_)	7A-FE	1112215030	6.0	11.05	38.4	P	G
8152.900	IN-EX	AVENSIS (_T22_), 1.8 VVT-i	1ZZ-FE	1112220020	5.5	10.34	34.5	P	G
8152.900	IN-EX	AVENSIS (_T22_), 1.8 VVT-i	1ZZ-FE	1112222030	5.5	10.34	34.5	P	G
8152.900	IN-EX	AVENSIS (T25_), 1.6 VVT-i	3ZZ-FE	1112220020	5.5	10.34	34.5	P	G
8152.900	IN-EX	AVENSIS (T25_), 1.6 VVT-i	3ZZ-FE	1112222030	5.5	10.34	34.5	P	G
8152.900	IN-EX	AVENSIS (T25_), 1.8	1ZZ-FE	1112220020	5.5	10.34	34.5	P	G
8152.900	IN-EX	AVENSIS (T25_), 1.8	1ZZ-FE	1112222030	5.5	10.34	34.5	P	G
8011.904	IN-EX	Avensis 2.0 D-4D	1AD-FTV	111220R010	6.0	11.04	40.6	P	S03
8011.904	IN-EX	Avensis 2.0 D-4D	1AD-FTV	1112227010	6.0	11.04	40.6	P	S03
8011.904	IN-EX	Avensis 2.2 D-4D	2AD-FTV	111220R010	6.0	11.04	40.6	P	S03
8011.904	IN-EX	Avensis 2.2 D-4D	2AD-FTV	1112227010	6.0	11.04	40.6	P	S03
8011.904	IN-EX	Avensis 2.2 D-CAT	2AD-FHV	111220R010	6.0	11.04	40.6	P	S03
8011.904	IN-EX	Avensis 2.2 D-CAT	2AD-FHV	1112227010	6.0	11.04	40.6	P	S03
8011.904	IN-EX	Avensis 3volumi 2.0 D-4D	1AD-FTV	111220R010	6.0	11.04	40.6	P	S03

(D1) Internal diameter, (D2) External diameter, (B) Shape, (C) Material

VALVE GUIDES

IVT Ref.	Type	Model	Engine	OEM Ref.	D1	D2	Length	B	C
TOYOTA									
8011.904	IN-EX	Avensis 3volumi 2.0 D-4D	1AD-FTV	1112227010	6.0	11.04	40.6	P	S03
8011.904	IN-EX	Avensis 3volumi 2.2 D-4D	2AD-FHV	111220R010	6.0	11.04	40.6	P	S03
8011.904	IN-EX	Avensis 3volumi 2.2 D-4D	2AD-FHV	1112227010	6.0	11.04	40.6	P	S03
8011.904	IN-EX	Avensis 3volumi 2.2 D-4D	2AD-FTV	111220R010	6.0	11.04	40.6	P	S03
8011.904	IN-EX	Avensis 3volumi 2.2 D-4D	2AD-FTV	1112227010	6.0	11.04	40.6	P	S03
8011.904	IN-EX	Avensis 3volumi 2.2 D-CAT	2AD-FHV	111220R010	6.0	11.04	40.6	P	S03
8011.904	IN-EX	Avensis 3volumi 2.2 D-CAT	2AD-FHV	1112227010	6.0	11.04	40.6	P	S03
8152.900	IN-EX	AVENSIS Kombi (T25), 1.6 VVT-i	3ZZ-FE	1112220020	5.5	10.34	34.5	P	G
8152.900	IN-EX	AVENSIS Kombi (T25), 1.6 VVT-i	3ZZ-FE	1112222030	5.5	10.34	34.5	P	G
8152.900	IN-EX	AVENSIS Kombi (T25), 1.8	1ZZ-FE	1112220020	5.5	10.34	34.5	P	G
8152.900	IN-EX	AVENSIS Kombi (T25), 1.8	1ZZ-FE	1112222030	5.5	10.34	34.5	P	G
8153.900	IN-EX	AVENSIS Liftback (_T22_), 1.6 (A	4A-FE	1112215030	6.0	11.05	38.4	P	G
8153.900	IN-EX	AVENSIS Liftback (_T22_), 1.6 (A	4A-FE	1112215030	6.0	11.05	38.4	P	G
8152.900	IN-EX	AVENSIS Liftback (_T22_), 1.6 V	3ZZ-FE	1112220020	5.5	10.34	34.5	P	G
8152.900	IN-EX	AVENSIS Liftback (_T22_), 1.6 V	3ZZ-FE	1112222030	5.5	10.34	34.5	P	G
8153.900	IN-EX	AVENSIS Liftback (_T22_), 1.8 (A	7A-FE	1112215030	6.0	11.05	38.4	P	G
8152.900	IN-EX	AVENSIS Liftback (_T22_), 1.8 V	1ZZ-FE	1112220020	5.5	10.34	34.5	P	G
8152.900	IN-EX	AVENSIS Liftback (_T22_), 1.8 V	1ZZ-FE	1112222030	5.5	10.34	34.5	P	G
8153.900	IN-EX	AVENSIS Station Wagon (_T22_),	4A-FE	1112215030	6.0	11.05	38.4	P	G
8153.900	IN-EX	AVENSIS Station Wagon (_T22_),	4A-FE	1112215030	6.0	11.05	38.4	P	G
8152.900	IN-EX	AVENSIS Station Wagon (_T22_),	3ZZ-FE	1112220020	5.5	10.34	34.5	P	G
8152.900	IN-EX	AVENSIS Station Wagon (_T22_),	3ZZ-FE	1112222030	5.5	10.34	34.5	P	G
8153.900	IN-EX	AVENSIS Station Wagon (_T22_),	7A-FE	1112215030	6.0	11.05	38.4	P	G
8152.900	IN-EX	AVENSIS Station Wagon (_T22_),	1ZZ-FE	1112220020	5.5	10.34	34.5	P	G
8152.900	IN-EX	AVENSIS Station Wagon (_T22_),	1ZZ-FE	1112222030	5.5	10.34	34.5	P	G
8152.900	IN-EX	AVENSIS Stufenheck (T25), 1.6 V	3ZZ-FE	1112220020	5.5	10.34	34.5	P	G
8152.900	IN-EX	AVENSIS Stufenheck (T25), 1.6 V	3ZZ-FE	1112222030	5.5	10.34	34.5	P	G
8152.900	IN-EX	AVENSIS Stufenheck (T25), 1.8	1ZZ-FE	1112220020	5.5	10.34	34.5	P	G
8152.900	IN-EX	AVENSIS Stufenheck (T25), 1.8	1ZZ-FE	1112222030	5.5	10.34	34.5	P	G
8011.904	IN-EX	Avensis SW 2.0 D-4D	1AD-FTV	111220R010	6.0	11.04	40.6	P	S03
8011.904	IN-EX	Avensis SW 2.0 D-4D	1AD-FTV	1112227010	6.0	11.04	40.6	P	S03
8011.904	IN-EX	Avensis SW 2.2 D-4D	2AD-FHV	111220R010	6.0	11.04	40.6	P	S03
8011.904	IN-EX	Avensis SW 2.2 D-4D	2AD-FHV	1112227010	6.0	11.04	40.6	P	S03
8011.904	IN-EX	Avensis SW 2.2 D-4D	2AD-FTV	111220R010	6.0	11.04	40.6	P	S03
8011.904	IN-EX	Avensis SW 2.2 D-4D	2AD-FTV	1112227010	6.0	11.04	40.6	P	S03
8011.904	IN-EX	Avensis SW 2.2 D-CAT	2AD-FHV	111220R010	6.0	11.04	40.6	P	S03
8011.904	IN-EX	Avensis SW 2.2 D-CAT	2AD-FHV	1112227010	6.0	11.04	40.6	P	S03
8165.104	IN-EX	AYGO (WNB1_, KGB1_), 1.4 HDi	2WZ-TV	0220A6	5.5	9.55	34.0	A	S03
8152.900	IN-EX	CAMRY (_CV2_, _XV2_), 3.0 24V	1MZ-FE	1112220020	5.5	10.34	34.5	P	G
8152.900	IN-EX	CAMRY (_CV2_, _XV2_), 3.0 24V	1MZ-FE	1112222030	5.5	10.34	34.5	P	G
8152.900	IN-EX	CAMRY (_CV2_, _XV2_), 3.0 V6	1MZ-FE	1112220020	5.5	10.34	34.5	P	G
8152.900	IN-EX	CAMRY (_CV2_, _XV2_), 3.0 V6	1MZ-FE	1112222030	5.5	10.34	34.5	P	G
8152.900	IN-EX	CAMRY (MCV3_, ACV3_, _XV3_)	1MZ-FE	1112220020	5.5	10.34	34.5	P	G
8152.900	IN-EX	CAMRY (MCV3_, ACV3_, _XV3_)	1MZ-FE	1112222030	5.5	10.34	34.5	P	G
8156.900	IN-EX	CAMRY Liftback (_V1_), 1.8 Turb	1C-TL	1112624020	8.0	13.04	50.0	P-1-6	G
8156.900	IN-EX	CAMRY Stufenheck (_V1_), 1.8 T	1C-TL	1112624020	8.0	13.04	50.0	P-1-6	G
8156.900	IN-EX	CARINA (TA4L, TA6_L), 1.8 D	1C	1112624020	8.0	13.04	50.0	P-1-6	G
8153.900	IN-EX	CARINA E (_T19_), 1.6 (AT190)	4A-FE	1112215030	6.0	11.05	38.4	P	G
8153.900	IN-EX	CARINA E (_T19_), 1.6 (AT190)	4A-FE	1112215030	6.0	11.05	38.4	P	G
8153.900	IN-EX	CARINA E (_T19_), 1.6 16V	4A-FE	1112215030	6.0	11.05	38.4	P	G
8153.900	IN-EX	CARINA E (_T19_), 1.6 GLI (AT19	4A-FE	1112215030	6.0	11.05	38.4	P	G
8153.900	IN-EX	CARINA E (_T19_), 1.8 (AT191)	7A-FE	1112215030	6.0	11.05	38.4	P	G
8156.900	IN-EX	CARINA E (_T19_), 2.0 D (CT190)	2C	1112624020	8.0	13.04	50.0	P-1-6	G
8153.900	IN-EX	CARINA E Sportswagon (_T19_),	4A-FE	1112215030	6.0	11.05	38.4	P	G
8153.900	IN-EX	CARINA E Sportswagon (_T19_),	4A-FE	1112215030	6.0	11.05	38.4	P	G
8153.900	IN-EX	CARINA E Sportswagon (_T19_),	7A-FE	1112215030	6.0	11.05	38.4	P	G
8156.900	IN-EX	CARINA E Sportswagon (_T19_),	2C	1112624020	8.0	13.04	50.0	P-1-6	G
8153.900	IN-EX	CARINA E Stufenheck (_T19_), 1.	4A-FE	1112215030	6.0	11.05	38.4	P	G
8153.900	IN-EX	CARINA E Stufenheck (_T19_), 1.	4A-FE	1112215030	6.0	11.05	38.4	P	G
8153.900	IN-EX	CARINA E Stufenheck (_T19_), 1.	4A-FE	1112215030	6.0	11.05	38.4	P	G
8153.900	IN-EX	CARINA E Stufenheck (_T19_), 1.	4A-FE	1112215030	6.0	11.05	38.4	P	G
8153.900	IN-EX	CARINA E Stufenheck (_T19_), 1.	7A-FE	1112215030	6.0	11.05	38.4	P	G

(D1) Internal diameter, (D2) External diameter, (B) Shape, (C) Material

VALVE GUIDES

IVT Ref.	Type	Model	Engine	OEM Ref.	D1	D2	Length	B	C
TOYOTA									
8156.900	IN-EX	CARINA E Stufenheck (_T19_), 2.	2C	1112624020	8.0	13.04	50.0	P-1-6	G
8156.900	IN-EX	CARINA II (_T15_), 2.0 D	2C-L	1112624020	8.0	13.04	50.0	P-1-6	G
8156.900	IN-EX	CARINA II (_T15_), 2.0 D (CT150)	2C-L	1112624020	8.0	13.04	50.0	P-1-6	G
8153.900	IN-EX	CARINA II (_T17_), 1.6 (AT171)	4A-F	1112215030	6.0	11.05	38.4	P	G
8153.900	IN-EX	CARINA II (_T17_), 1.6 (AT171)	4A-FE	1112215030	6.0	11.05	38.4	P	G
8153.900	IN-EX	CARINA II (_T17_), 1.6 (AT171)	4A-FE	1112215030	6.0	11.05	38.4	P	G
8156.900	IN-EX	CARINA II (_T17_), 2.0 D	2C-L	1112624020	8.0	13.04	50.0	P-1-6	G
8153.900	IN-EX	CARINA II Station Wagon (_T17_)	4A-F	1112215030	6.0	11.05	38.4	P	G
8153.900	IN-EX	CARINA II Station Wagon (_T17_)	4A-FE	1112215030	6.0	11.05	38.4	P	G
8153.900	IN-EX	CARINA II Station Wagon (_T17_)	4A-FE	1112215030	6.0	11.05	38.4	P	G
8156.900	IN-EX	CARINA II Station Wagon (_T17_)	2C-L	1112624020	8.0	13.04	50.0	P-1-6	G
8156.900	IN-EX	CARINA II Stufenheck (_T15_), 2.	2C-L	1112624020	8.0	13.04	50.0	P-1-6	G
8153.900	IN-EX	CARINA II Stufenheck (_T17_), 1.	4A-F	1112215030	6.0	11.05	38.4	P	G
8153.900	IN-EX	CARINA II Stufenheck (_T17_), 1.	4A-FE	1112215030	6.0	11.05	38.4	P	G
8153.900	IN-EX	CARINA II Stufenheck (_T17_), 1.	4A-FE	1112215030	6.0	11.05	38.4	P	G
8156.900	IN-EX	CARINA II Stufenheck (_T17_), 2.	2C	1112624020	8.0	13.04	50.0	P-1-6	G
8156.900	IN-EX	CARINA Station Wagon (TA4K, T	1C	1112624020	8.0	13.04	50.0	P-1-6	G
8153.900	IN-EX	CELICA (ST20_, AT20_), 1.8 i 16	7A-FE	1112215030	6.0	11.05	38.4	P	G
8152.900	IN-EX	CELICA (ZZT23_), 1.8 16V VT-i (Z	1ZZ-FE	1112220020	5.5	10.34	34.5	P	G
8152.900	IN-EX	CELICA (ZZT23_), 1.8 16V VT-i (Z	1ZZ-FE	1112222030	5.5	10.34	34.5	P	G
8153.900	IN-EX	CELICA Coupe (AT18_, ST18_), 1	4A-FE	1112215030	6.0	11.05	38.4	P	G
8156.900	IN-EX	COPAIN (KP30_), 1.0	2K	1112624020	8.0	13.04	50.0	P-1-6	G
8156.900	IN-EX	COPAIN Furgonato (KP36V_), 1.0	2K	1112624020	8.0	13.04	50.0	P-1-6	G
8021.900	IN-EX	COROLLA (_E10_), 1.3 12V (EE1	-		6.0	11.04	40.5	P	G
8021.900	IN-EX	COROLLA (_E10_), 1.3 XLI (EE1	-		6.0	11.04	40.5	P	G
8021.900	IN-EX	COROLLA (_E10_), 1.3 XLI 16V (	-		6.0	11.04	40.5	P	G
8153.900	IN-EX	COROLLA (_E10_), 1.6 Si (AE101	4A-FE	1112215030	6.0	11.05	38.4	P	G
8156.900	IN-EX	COROLLA (_E10_), 2.0 D (CE100	2C	1112624020	8.0	13.04	50.0	P-1-6	G
8021.900	IN-EX	COROLLA (_E11_), 1.4 (EE111_)	-		6.0	11.04	40.5	P	G
8152.900	IN-EX	COROLLA (_E11_), 1.4 16V (ZZE	4ZZ-FE	1112220020	5.5	10.34	34.5	P	G
8152.900	IN-EX	COROLLA (_E11_), 1.4 16V (ZZE	4ZZ-FE	1112222030	5.5	10.34	34.5	P	G
8152.900	IN-EX	COROLLA (_E11_), 1.6 16V (ZZE	3ZZ-FE	1112220020	5.5	10.34	34.5	P	G
8152.900	IN-EX	COROLLA (_E11_), 1.6 16V (ZZE	3ZZ-FE	1112222030	5.5	10.34	34.5	P	G
8153.900	IN-EX	COROLLA (_E11_), 1.6 Aut. (AE1	4A-FE	1112215030	6.0	11.05	38.4	P	G
8178.601	IN-EX	COROLLA (_E11_), 1.9 D (WZE1	1WZ		8.0	14.05	48.0	F	B
8156.900	IN-EX	COROLLA (_E7_), 1.3 (KE70)	4K	1112624020	8.0	13.04	50.0	P-1-6	G
8156.900	IN-EX	COROLLA (_E7_), 1.3 (KE70)	4K	1112624020	8.0	13.04	50.0	P-1-6	G
8156.900	IN-EX	COROLLA (_E7_), 1.8 D (CE70)	1C	1112624020	8.0	13.04	50.0	P-1-6	G
8021.900	IN-EX	COROLLA (_E8_), 1.3 (AE80/EE8	-		6.0	11.04	40.5	P	G
8156.900	IN-EX	COROLLA (_E8_), 1.8 D	1C	1112624020	8.0	13.04	50.0	P-1-6	G
8156.900	IN-EX	COROLLA (_E8_), 1.8 D	1C-L	1112624020	8.0	13.04	50.0	P-1-6	G
8021.900	IN-EX	COROLLA (_E9_), 1.3 i (EE90)	-		6.0	11.04	40.5	P	G
8153.900	IN-EX	COROLLA (_E9_), 1.6 (AE92)	4A-F	1112215030	6.0	11.05	38.4	P	G
8153.900	IN-EX	COROLLA (_E9_), 1.6 i	4A-FE	1112215030	6.0	11.05	38.4	P	G
8153.900	IN-EX	COROLLA (_E9_), 1.6 i 4WD	4A-FE	1112215030	6.0	11.05	38.4	P	G
8156.900	IN-EX	COROLLA (_E9_), 1.8 D	1C	1112624020	8.0	13.04	50.0	P-1-6	G
8156.900	IN-EX	COROLLA (_E9_), 1.8 D	1C	1112624020	8.0	13.04	50.0	P-1-6	G
8152.900	IN-EX	COROLLA (CDE12_, ZZE12_, ND	4ZZ-FE	1112220020	5.5	10.34	34.5	P	G
8152.900	IN-EX	COROLLA (CDE12_, ZZE12_, ND	4ZZ-FE	1112222030	5.5	10.34	34.5	P	G
8152.900	IN-EX	COROLLA (CDE12_, ZZE12_, ND	3ZZ-FE	1112220020	5.5	10.34	34.5	P	G
8152.900	IN-EX	COROLLA (CDE12_, ZZE12_, ND	3ZZ-FE	1112222030	5.5	10.34	34.5	P	G
8156.900	IN-EX	COROLLA (KE), 1.2 (KE20, KE25	3K-B/3K-C/3K-H	1112624020	8.0	13.04	50.0	P-1-6	G
8156.900	IN-EX	COROLLA (KE), 1.2 (KE20, KE25,	3K-B/3K-C/3K-H	1112624020	8.0	13.04	50.0	P-1-6	G
8188.904	IN-EX	COROLLA (ZZE12_, NDE12_, ZD	1ND-TV	1112230020	6.0	11.09	40.6	P	S03
8188.904	IN-EX	COROLLA (ZZE12_, NDE12_, ZD	1ND-TV	1112233030	6.0	11.09	40.6	P	S03
8014.605	IN-EX	Corolla 3volumi 1.3	1NR-FE	1112231041	5.5	10.33	43.5	F	S06
8156.900	IN-EX	COROLLA Combi (TE72_), 1.2 (K	3K/3K-B/3K-H	1112624020	8.0	13.04	50.0	P-1-6	G
8021.900	IN-EX	COROLLA Compact (_E10_), 1.3	-		6.0	11.04	40.5	P	G
8021.900	IN-EX	COROLLA Compact (_E10_), 1.3	-		6.0	11.04	40.5	P	G
8021.900	IN-EX	COROLLA Compact (_E10_), 1.3	-		6.0	11.04	40.5	P	G
8153.900	IN-EX	COROLLA Compact (_E10_), 1.6	4A-FE	1112215030	6.0	11.05	38.4	P	G
8153.900	IN-EX	COROLLA Compact (_E10_), 1.8	7A-FE	1112215030	6.0	11.05	38.4	P	G

(D1) Internal diameter, (D2) External diameter, (B) Shape, (C) Material

VALVE GUIDES

IVT Ref.	Type	Model	Engine	OEM Ref.	D1	D2	Length	B	C
TOYOTA									
8156.900	IN-EX	COROLLA Compact (_E10_), 2.0	2C	1112624020	8.0	13.04	50.0	P-1-6	G
8021.900	IN-EX	COROLLA Compact (_E11_), 1.4	-		6.0	11.04	40.5	P	G
8152.900	IN-EX	COROLLA Compact (_E11_), 1.4	4ZZ-FE	1112220020	5.5	10.34	34.5	P	G
8152.900	IN-EX	COROLLA Compact (_E11_), 1.4	4ZZ-FE	1112222030	5.5	10.34	34.5	P	G
8153.900	IN-EX	COROLLA Compact (_E11_), 1.6	4A-FE	1112215030	6.0	11.05	38.4	P	G
8152.900	IN-EX	COROLLA Compact (_E11_), 1.6	3ZZ-FE	1112220020	5.5	10.34	34.5	P	G
8152.900	IN-EX	COROLLA Compact (_E11_), 1.6	3ZZ-FE	1112222030	5.5	10.34	34.5	P	G
8153.900	IN-EX	COROLLA Compact (_E11_), 1.6	4A-FE	1112215030	6.0	11.05	38.4	P	G
8178.601	IN-EX	COROLLA Compact (_E11_), 1.9	1WZ		8.0	14.05	48.0	F	B
8021.900	IN-EX	COROLLA Compact (_E9_), 1.3 (	-		6.0	11.04	40.5	P	G
8153.900	IN-EX	COROLLA Compact (_E9_), 1.6 (	4A-F	1112215030	6.0	11.05	38.4	P	G
8153.900	IN-EX	COROLLA Compact (_E9_), 1.6 i (	4A-FE	1112215030	6.0	11.05	38.4	P	G
8156.900	IN-EX	COROLLA Compact (_E9_), 1.8 D	1C	1112624020	8.0	13.04	50.0	P-1-6	G
8156.900	IN-EX	COROLLA Compact (_E9_), 1.8 D	1C	1112624020	8.0	13.04	50.0	P-1-6	G
8156.900	IN-EX	COROLLA Coupe (KE), 1.2 (KE35	3K-B/3K-C/3K-H	1112624020	8.0	13.04	50.0	P-1-6	G
8021.900	IN-EX	COROLLA FX Compact (E8B), 1.	-		6.0	11.04	40.5	P	G
8156.900	IN-EX	COROLLA FX Compact (E8B), 1.	1C	1112624020	8.0	13.04	50.0	P-1-6	G
8156.900	IN-EX	COROLLA FX Compact (E8B), 1.	1C-L	1112624020	8.0	13.04	50.0	P-1-6	G
8188.904	IN-EX	COROLLA Kombi (_E12J_, _E12	1ND-TV	1112230020	6.0	11.09	40.6	P	S03
8188.904	IN-EX	COROLLA Kombi (_E12J_, _E12	1ND-TV	1112233030	6.0	11.09	40.6	P	S03
8152.900	IN-EX	COROLLA Kombi (_E12J_, _E12	4ZZ-FE	1112220020	5.5	10.34	34.5	P	G
8152.900	IN-EX	COROLLA Kombi (_E12J_, _E12	4ZZ-FE	1112222030	5.5	10.34	34.5	P	G
8152.900	IN-EX	COROLLA Kombi (_E12J_, _E12	3ZZ-FE	1112220020	5.5	10.34	34.5	P	G
8152.900	IN-EX	COROLLA Kombi (_E12J_, _E12	3ZZ-FE	1112222030	5.5	10.34	34.5	P	G
8021.900	IN-EX	COROLLA Liftback (_E10_), 1.3 1	-		6.0	11.04	40.5	P	G
8021.900	IN-EX	COROLLA Liftback (_E10_), 1.3 X	-		6.0	11.04	40.5	P	G
8153.900	IN-EX	COROLLA Liftback (_E10_), 1.6 G	4A-FE	1112215030	6.0	11.05	38.4	P	G
8153.900	IN-EX	COROLLA Liftback (_E10_), 1.8 G	7A-FE	1112215030	6.0	11.05	38.4	P	G
8156.900	IN-EX	COROLLA Liftback (_E10_), 2.0 D	2C	1112624020	8.0	13.04	50.0	P-1-6	G
8021.900	IN-EX	COROLLA Liftback (_E11_), 1.4 (	-		6.0	11.04	40.5	P	G
8152.900	IN-EX	COROLLA Liftback (_E11_), 1.4 (	4ZZ-FE	1112220020	5.5	10.34	34.5	P	G
8152.900	IN-EX	COROLLA Liftback (_E11_), 1.4 (	4ZZ-FE	1112222030	5.5	10.34	34.5	P	G
8153.900	IN-EX	COROLLA Liftback (_E11_), 1.6 (	4A-FE	1112215030	6.0	11.05	38.4	P	G
8152.900	IN-EX	COROLLA Liftback (_E11_), 1.6 (	3ZZ-FE	1112220020	5.5	10.34	34.5	P	G
8152.900	IN-EX	COROLLA Liftback (_E11_), 1.6 (	3ZZ-FE	1112222030	5.5	10.34	34.5	P	G
8153.900	IN-EX	COROLLA Liftback (_E11_), 1.6 A	4A-FE	1112215030	6.0	11.05	38.4	P	G
8178.601	IN-EX	COROLLA Liftback (_E11_), 1.9 D	1WZ		8.0	14.05	48.0	F	B
8156.900	IN-EX	COROLLA Liftback (_E7_), 1.3 (K	4K	1112624020	8.0	13.04	50.0	P-1-6	G
8156.900	IN-EX	COROLLA Liftback (_E7_), 1.3 (K	4K	1112624020	8.0	13.04	50.0	P-1-6	G
8156.900	IN-EX	COROLLA Liftback (_E7_), 1.8 D (	1C	1112624020	8.0	13.04	50.0	P-1-6	G
8021.900	IN-EX	COROLLA Liftback (_E8_), 1.3 (E	-		6.0	11.04	40.5	P	G
8156.900	IN-EX	COROLLA Liftback (_E8_), 1.8 D	1C	1112624020	8.0	13.04	50.0	P-1-6	G
8156.900	IN-EX	COROLLA Liftback (_E8_), 1.8 D (	1C-L	1112624020	8.0	13.04	50.0	P-1-6	G
8021.900	IN-EX	COROLLA Liftback (_E9_), 1.3 i (	-		6.0	11.04	40.5	P	G
8153.900	IN-EX	COROLLA Liftback (_E9_), 1.6	4A-F	1112215030	6.0	11.05	38.4	P	G
8153.900	IN-EX	COROLLA Liftback (_E9_), 1.6 (A	4A-F	1112215030	6.0	11.05	38.4	P	G
8153.900	IN-EX	COROLLA Liftback (_E9_), 1.6 (A	4A-FE	1112215030	6.0	11.05	38.4	P	G
8156.900	IN-EX	COROLLA Liftback (_E9_), 1.8 D (	1C	1112624020	8.0	13.04	50.0	P-1-6	G
8156.900	IN-EX	COROLLA Liftback (_E9_), 1.8 D (	1C	1112624020	8.0	13.04	50.0	P-1-6	G
8156.900	IN-EX	COROLLA Liftback (KE, TE), 1.2	3K-B/3K-C/3K-H	1112624020	8.0	13.04	50.0	P-1-6	G
8156.900	IN-EX	COROLLA Station Wagon (_E7_),	4K	1112624020	8.0	13.04	50.0	P-1-6	G
8156.900	IN-EX	COROLLA Station Wagon (_E7_),	4K-C	1112624020	8.0	13.04	50.0	P-1-6	G
8156.900	IN-EX	COROLLA Station Wagon (_E7_),	1C	1112624020	8.0	13.04	50.0	P-1-6	G
8021.900	IN-EX	COROLLA Station Wagon (_E9_),	-		6.0	11.04	40.5	P	G
8153.900	IN-EX	COROLLA Station Wagon (_E9_),	4A-F	1112215030	6.0	11.05	38.4	P	G
8153.900	IN-EX	COROLLA Station Wagon (_E9_),	4A-F	1112215030	6.0	11.05	38.4	P	G
8153.900	IN-EX	COROLLA Station Wagon (_E9_),	4A-FE	1112215030	6.0	11.05	38.4	P	G
8153.900	IN-EX	COROLLA Station Wagon (_E9_),	4A-FE	1112215030	6.0	11.05	38.4	P	G
8156.900	IN-EX	COROLLA Station Wagon (_E9_),	1C	1112624020	8.0	13.04	50.0	P-1-6	G
8156.900	IN-EX	COROLLA Station Wagon (_E9_),	1C	1112624020	8.0	13.04	50.0	P-1-6	G
8188.904	IN-EX	COROLLA Stufenheck (_E12J_, _	1ND-TV	1112230020	6.0	11.09	40.6	P	S03
8188.904	IN-EX	COROLLA Stufenheck (_E12J_, _	1ND-TV	1112233030	6.0	11.09	40.6	P	S03

(D1) Internal diameter, (D2) External diameter, (B) Shape, (C) Material

VALVE GUIDES

IVT Ref.	Type	Model	Engine	OEM Ref.	D1	D2	Length	B	C
TOYOTA									
8152.900	IN-EX	COROLLA Stufenheck (_E12J_, _	4ZZ-FE	1112220020	5.5	10.34	34.5	P	G
8152.900	IN-EX	COROLLA Stufenheck (_E12J_, _	4ZZ-FE	1112222030	5.5	10.34	34.5	P	G
8152.900	IN-EX	COROLLA Stufenheck (_E12J_, _	3ZZ-FE	1112220020	5.5	10.34	34.5	P	G
8152.900	IN-EX	COROLLA Stufenheck (_E12J_, _	3ZZ-FE	1112222030	5.5	10.34	34.5	P	G
8188.904	IN-EX	COROLLA Stufenheck (NRE18_,	1ND-TV	1112230020	6.0	11.09	40.6	P	S03
8188.904	IN-EX	COROLLA Stufenheck (NRE18_,	1ND-TV	1112233030	6.0	11.09	40.6	P	S03
8152.900	IN-EX	COROLLA Verso (ZDE12_, CDE1	3ZZ-FE	1112220020	5.5	10.34	34.5	P	G
8152.900	IN-EX	COROLLA Verso (ZDE12_, CDE1	3ZZ-FE	1112222030	5.5	10.34	34.5	P	G
8152.900	IN-EX	COROLLA Verso (ZDE12_, CDE1	1ZZ-FE	1112220020	5.5	10.34	34.5	P	G
8152.900	IN-EX	COROLLA Verso (ZDE12_, CDE1	1ZZ-FE	1112222030	5.5	10.34	34.5	P	G
8152.900	IN-EX	COROLLA Verso (ZER_, ZZE12_,	3ZZ-FE	1112220020	5.5	10.34	34.5	P	G
8152.900	IN-EX	COROLLA Verso (ZER_, ZZE12_,	3ZZ-FE	1112222030	5.5	10.34	34.5	P	G
8152.900	IN-EX	COROLLA Verso (ZER_, ZZE12_,	1ZZ-FE	1112220020	5.5	10.34	34.5	P	G
8152.900	IN-EX	COROLLA Verso (ZER_, ZZE12_,	1ZZ-FE	1112222030	5.5	10.34	34.5	P	G
8011.904	IN-EX	Corolla Verso 2.2 D-4D	2AD-FHV	111220R010	6.0	11.04	40.6	P	S03
8011.904	IN-EX	Corolla Verso 2.2 D-4D	2AD-FHV	1112227010	6.0	11.04	40.6	P	S03
8011.904	IN-EX	Corolla Verso 2.2 D-4D	2AD-FTV	111220R010	6.0	11.04	40.6	P	S03
8011.904	IN-EX	Corolla Verso 2.2 D-4D	2AD-FTV	1112227010	6.0	11.04	40.6	P	S03
8021.900	IN-EX	COROLLA Wagon (__E11_), 1.4 (	-		6.0	11.04	40.5	P	G
8152.900	IN-EX	COROLLA Wagon (__E11_), 1.4 1	4ZZ-FE	1112220020	5.5	10.34	34.5	P	G
8152.900	IN-EX	COROLLA Wagon (__E11_), 1.4 1	4ZZ-FE	1112222030	5.5	10.34	34.5	P	G
8153.900	IN-EX	COROLLA Wagon (__E11_), 1.6 (	4A-FE	1112215030	6.0	11.05	38.4	P	G
8152.900	IN-EX	COROLLA Wagon (__E11_), 1.6 1	3ZZ-FE	1112220020	5.5	10.34	34.5	P	G
8152.900	IN-EX	COROLLA Wagon (__E11_), 1.6 1	3ZZ-FE	1112222030	5.5	10.34	34.5	P	G
8153.900	IN-EX	COROLLA Wagon (__E11_), 1.6	4A-FE	1112215030	6.0	11.05	38.4	P	G
8153.900	IN-EX	COROLLA Wagon (__E11_), 1.8	7A-FE	1112215030	6.0	11.05	38.4	P	G
8153.900	IN-EX	COROLLA Wagon (__E11_), 1.8 4	7A-FE	1112215030	6.0	11.05	38.4	P	G
8178.601	IN-EX	COROLLA Wagon (__E11_), 1.9	-		8.0	14.05	48.0	F	B
8021.900	IN-EX	COROLLA Wagon (_E10_), 1.3 12	-		6.0	11.04	40.5	P	G
8021.900	IN-EX	COROLLA Wagon (_E10_), 1.3 X	-		6.0	11.04	40.5	P	G
8021.900	IN-EX	COROLLA Wagon (_E10_), 1.3 X	-		6.0	11.04	40.5	P	G
8153.900	IN-EX	COROLLA Wagon (_E10_), 1.6 Si	4A-FE	1112215030	6.0	11.05	38.4	P	G
8153.900	IN-EX	COROLLA Wagon (_E10_), 1.8 16	7A-FE	1112215030	6.0	11.05	38.4	P	G
8156.900	IN-EX	COROLLA Wagon (_E10_), 2.0 D	2C	1112624020	8.0	13.04	50.0	P-1-6	G
8188.904	IN-EX	DYNA Pritsche/Fahrgestell (KD_,	2KD-FTV	1112230020	6.0	11.09	40.6	P	S03
8188.904	IN-EX	DYNA Pritsche/Fahrgestell (KD_,	2KD-FTV	1112230020	6.0	11.09	40.6	P	S03
8188.904	IN-EX	DYNA Pritsche/Fahrgestell (KD_,	2KD-FTV	1112233030	6.0	11.09	40.6	P	S03
8188.904	IN-EX	DYNA Pritsche/Fahrgestell (KD_,	2KD-FTV	1112233030	6.0	11.09	40.6	P	S03
8188.904	IN-EX	DYNA Pritsche/Fahrgestell (KD_,	1KD-FTV	1112230020	6.0	11.09	40.6	P	S03
8188.904	IN-EX	DYNA Pritsche/Fahrgestell (KD_,	1KD-FTV	1112233030	6.0	11.09	40.6	P	S03
8188.904	IN-EX	DYNA Pritsche/Fahrgestell (KD_,	5L	1112230020	6.0	11.09	40.6	P	S03
8188.904	IN-EX	DYNA Pritsche/Fahrgestell (KD_,	5L	1112233030	6.0	11.09	40.6	P	S03
8188.904	IN-EX	HIACE III Wagon (LH1_, RZH1_),	2KD-FTV	1112230020	6.0	11.09	40.6	P	S03
8188.904	IN-EX	HIACE III Wagon (LH1_, RZH1_),	2KD-FTV	1112233030	6.0	11.09	40.6	P	S03
8188.904	IN-EX	HIACE IV Bus (LH1_), 2.5 D-4D	2KD-FTV	1112230020	6.0	11.09	40.6	P	S03
8188.904	IN-EX	HIACE IV Bus (LH1_), 2.5 D-4D	2KD-FTV	1112230020	6.0	11.09	40.6	P	S03
8188.904	IN-EX	HIACE IV Bus (LH1_), 2.5 D-4D	2KD-FTV	1112230020	6.0	11.09	40.6	P	S03
8188.904	IN-EX	HIACE IV Bus (LH1_), 2.5 D-4D	2KD-FTV	1112230020	6.0	11.09	40.6	P	S03
8188.904	IN-EX	HIACE IV Bus (LH1_), 2.5 D-4D	2KD-FTV	1112233030	6.0	11.09	40.6	P	S03
8188.904	IN-EX	HIACE IV Bus (LH1_), 2.5 D-4D	2KD-FTV	1112233030	6.0	11.09	40.6	P	S03
8188.904	IN-EX	HIACE IV Bus (LH1_), 2.5 D-4D	2KD-FTV	1112233030	6.0	11.09	40.6	P	S03
8188.904	IN-EX	HIACE IV Bus (LH1_), 2.5 D-4D	2KD-FTV	1112233030	6.0	11.09	40.6	P	S03
8188.904	IN-EX	HIACE IV Bus (LH1_), 2.5 D-4D 4	2KD-FTV	1112230020	6.0	11.09	40.6	P	S03
8188.904	IN-EX	HIACE IV Bus (LH1_), 2.5 D-4D 4	2KD-FTV	1112233030	6.0	11.09	40.6	P	S03
8188.904	IN-EX	HIACE IV Kasten (LXH1_, RZH1_,	2KD-FTV	1112230020	6.0	11.09	40.6	P	S03
8188.904	IN-EX	HIACE IV Kasten (LXH1_, RZH1_,	2KD-FTV	1112230020	6.0	11.09	40.6	P	S03
8188.904	IN-EX	HIACE IV Kasten (LXH1_, RZH1_,	2KD-FTV	1112230020	6.0	11.09	40.6	P	S03
8188.904	IN-EX	HIACE IV Kasten (LXH1_, RZH1_,	2KD-FTV	1112233030	6.0	11.09	40.6	P	S03
8188.904	IN-EX	HIACE IV Kasten (LXH1_, RZH1_,	2KD-FTV	1112233030	6.0	11.09	40.6	P	S03
8188.904	IN-EX	HIACE IV Kasten (LXH1_, RZH1_,	2KD-FTV	1112233030	6.0	11.09	40.6	P	S03
8188.904	IN-EX	HIACE IV Kasten (LXH1_, RZH1_,	2KD-FTV	1112230020	6.0	11.09	40.6	P	S03
8188.904	IN-EX	HIACE IV Kasten (LXH1_, RZH1_,	2KD-FTV	1112230020	6.0	11.09	40.6	P	S03

(D1) Internal diameter, (D2) External diameter, (B) Shape, (C) Material

VALVE GUIDES

IVT Ref.	Type	Model	Engine	OEM Ref.	D1	D2	Length	B	C
TOYOTA									
8188.904	IN-EX	HIACE IV Kasten (LXH1_, RZH1_,	2KD-FTV	1112233030	6.0	11.09	40.6	P	S03
8188.904	IN-EX	HIACE IV Kasten (LXH1_, RZH1_,	2KD-FTV	1112233030	6.0	11.09	40.6	P	S03
8039.105	IN-EX	HILUX II Pick-up (LN8_, RN5_, LN	2KD-FTV		7.0	11.03	45.8	A1	S06
8188.904	IN-EX	HILUX III Pick-up (TGN1_, GGN2	2KD-FTV	1112230020	6.0	11.09	40.6	P	S03
8188.904	IN-EX	HILUX III Pick-up (TGN1_, GGN2	2KD-FTV	1112233030	6.0	11.09	40.6	P	S03
8188.904	IN-EX	HILUX III Pick-up (TGN1_, GGN2	2KD-FTV	1112230020	6.0	11.09	40.6	P	S03
8188.904	IN-EX	HILUX III Pick-up (TGN1_, GGN2	2KD-FTV	1112230020	6.0	11.09	40.6	P	S03
8188.904	IN-EX	HILUX III Pick-up (TGN1_, GGN2	2KD-FTV	1112233030	6.0	11.09	40.6	P	S03
8188.904	IN-EX	HILUX III Pick-up (TGN1_, GGN2	2KD-FTV	1112233030	6.0	11.09	40.6	P	S03
8188.904	IN-EX	HILUX III Pick-up (TGN1_, GGN2	2KD-FTV	1112230020	6.0	11.09	40.6	P	S03
8188.904	IN-EX	HILUX III Pick-up (TGN1_, GGN2	2KD-FTV	1112233030	6.0	11.09	40.6	P	S03
8188.904	IN-EX	HILUX III Pick-up (TGN1_, GGN2	1KD-FTV	1112230020	6.0	11.09	40.6	P	S03
8188.904	IN-EX	HILUX III Pick-up (TGN1_, GGN2	1KD-FTV	1112233030	6.0	11.09	40.6	P	S03
8188.904	IN-EX	IQ (KPJ1_, NGJ1_, KGJ1_, NUJ1	1ND-TV	1112230020	6.0	11.09	40.6	P	S03
8188.904	IN-EX	IQ (KPJ1_, NGJ1_, KGJ1_, NUJ1	1ND-TV	1112233030	6.0	11.09	40.6	P	S03
8014.605	IN-EX	IQ 1.3	1NR-FE	1112231041	5.5	10.33	43.5	F	S06
8188.904	IN-EX	LAND CRUISER (KDJ12_, GRJ12	1KD-FTV	1112230020	6.0	11.09	40.6	P	S03
8188.904	IN-EX	LAND CRUISER (KDJ12_, GRJ12	1KD-FTV	1112230020	6.0	11.09	40.6	P	S03
8188.904	IN-EX	LAND CRUISER (KDJ12_, GRJ12	1KD-FTV	1112233030	6.0	11.09	40.6	P	S03
8188.904	IN-EX	LAND CRUISER (KDJ12_, GRJ12	1KD-FTV	1112233030	6.0	11.09	40.6	P	S03
8188.904	IN-EX	LAND CRUISER (KDJ12_, GRJ12	1KD-FTV	1112230020	6.0	11.09	40.6	P	S03
8188.904	IN-EX	LAND CRUISER (KDJ12_, GRJ12	1KD-FTV	1112233030	6.0	11.09	40.6	P	S03
8152.900	IN-EX	LAND CRUISER (LJ12_, KZJ12_,	1GR-FE	1112220020	5.5	10.34	34.5	P	G
8152.900	IN-EX	LAND CRUISER (LJ12_, KZJ12_,	1GR-FE	1112222030	5.5	10.34	34.5	P	G
8152.900	IN-EX	LAND CRUISER 100 (FZJ1_, UZJ	2UZ-FE	1112220020	5.5	10.34	34.5	P	G
8152.900	IN-EX	LAND CRUISER 100 (FZJ1_, UZJ	2UZ-FE	1112222030	5.5	10.34	34.5	P	G
8152.900	IN-EX	LAND CRUISER 100 (FZJ1_, UZJ	2UZ-FE	1112220020	5.5	10.34	34.5	P	G
8152.900	IN-EX	LAND CRUISER 100 (FZJ1_, UZJ	2UZ-FE	1112222030	5.5	10.34	34.5	P	G
8188.904	IN-EX	LAND CRUISER 150 (KDJ15_, G	1KD-FTV	1112230020	6.0	11.09	40.6	P	S03
8188.904	IN-EX	LAND CRUISER 150 (KDJ15_, G	1KD-FTV	1112230020	6.0	11.09	40.6	P	S03
8188.904	IN-EX	LAND CRUISER 150 (KDJ15_, G	1KD-FTV	1112233030	6.0	11.09	40.6	P	S03
8188.904	IN-EX	LAND CRUISER 150 (KDJ15_, G	1KD-FTV	1112233030	6.0	11.09	40.6	P	S03
8152.900	IN-EX	LAND CRUISER 200 (VDJ2_, UZ	2UZ-FE	1112220020	5.5	10.34	34.5	P	G
8152.900	IN-EX	LAND CRUISER 200 (VDJ2_, UZ	2UZ-FE	1112222030	5.5	10.34	34.5	P	G
8188.904	IN-EX	LAND CRUISER 90 (_J9_), 3.0 D-	1KD-FTV	1112230020	6.0	11.09	40.6	P	S03
8188.904	IN-EX	LAND CRUISER 90 (_J9_), 3.0 D-	1KD-FTV	1112233030	6.0	11.09	40.6	P	S03
8152.900	IN-EX	LAND CRUISER 90 (_J9_), 4.7	2UZ-FE	1112220020	5.5	10.34	34.5	P	G
8152.900	IN-EX	LAND CRUISER 90 (_J9_), 4.7	2UZ-FE	1112222030	5.5	10.34	34.5	P	G
8156.900	IN-EX	LITEACE Bus (_R2_LG), 1.5 (KR2	5K	1112624020	8.0	13.04	50.0	P-1-6	G
8156.900	IN-EX	LITEACE Bus (_R2_LG), 2.0 D (C	2C	1112624020	8.0	13.04	50.0	P-1-6	G
8156.900	IN-EX	LITEACE Bus (CM30_G, KM30_G	5K	1112624020	8.0	13.04	50.0	P-1-6	G
8156.900	IN-EX	LITEACE Bus (CM30_G, KM30_G	5K	1112624020	8.0	13.04	50.0	P-1-6	G
8156.900	IN-EX	LITEACE Bus (CM30_G, KM30_G	2C	1112624020	8.0	13.04	50.0	P-1-6	G
8156.900	IN-EX	LITEACE Kasten (_R2__V), 1.5 (K	5K	1112624020	8.0	13.04	50.0	P-1-6	G
8156.900	IN-EX	LITEACE Kasten (_R2__V), 2.0 D	2C	1112624020	8.0	13.04	50.0	P-1-6	G
8156.900	IN-EX	LITEACE Kasten (CM3_V, KM3_	5K	1112624020	8.0	13.04	50.0	P-1-6	G
8156.900	IN-EX	LITEACE Kasten (CM3_V, KM3_	1C	1112624020	8.0	13.04	50.0	P-1-6	G
8156.900	IN-EX	LITEACE Kasten (CM3_V, KM3_	2C	1112624020	8.0	13.04	50.0	P-1-6	G
8156.900	IN-EX	LITEACE Kasten (KM2_), 1.3	4K/4K-C	1112624020	8.0	13.04	50.0	P-1-6	G
8156.900	IN-EX	LITEACE Wagon (YM2_, CM2_, K	4K	1112624020	8.0	13.04	50.0	P-1-6	G
8152.900	IN-EX	MR 2 III (ZZW3_), 1.8 16V VT-i (Z	1ZZ-FE	1112220020	5.5	10.34	34.5	P	G
8152.900	IN-EX	MR 2 III (ZZW3_), 1.8 16V VT-i (Z	1ZZ-FE	1112222030	5.5	10.34	34.5	P	G
8152.900	IN-EX	RAV 4 II (CLA2_, XA2_, ZCA2_, A	1ZZ-FE	1112220020	5.5	10.34	34.5	P	G
8152.900	IN-EX	RAV 4 II (CLA2_, XA2_, ZCA2_, A	1ZZ-FE	1112222030	5.5	10.34	34.5	P	G
8011.904	IN-EX	Rav 4 III 2.2 D-4D	2AD-FHV	111220R010	6.0	11.04	40.6	P	S03
8011.904	IN-EX	Rav 4 III 2.2 D-4D	2AD-FHV	1112227010	6.0	11.04	40.6	P	S03
8011.904	IN-EX	Rav 4 III 2.2 D-4D	2AD-FTV	111220R010	6.0	11.04	40.6	P	S03
8011.904	IN-EX	Rav 4 III 2.2 D-4D	2AD-FTV	1112227010	6.0	11.04	40.6	P	S03
8011.904	IN-EX	Rav 4 III 2.2 D-4D 4WD	2AD-FHV	111220R010	6.0	11.04	40.6	P	S03
8011.904	IN-EX	Rav 4 III 2.2 D-4D 4WD	2AD-FHV	1112227010	6.0	11.04	40.6	P	S03
8011.904	IN-EX	Rav 4 III 2.2 D-4D 4WD	2AD-FTV	111220R010	6.0	11.04	40.6	P	S03
8011.904	IN-EX	Rav 4 III 2.2 D-4D 4WD	2AD-FTV	1112227010	6.0	11.04	40.6	P	S03

(D1) Internal diameter, (D2) External diameter, (B) Shape, (C) Material

VALVE GUIDES

IVT Ref.	Type	Model	Engine	OEM Ref.	D1	D2	Length	B	C
TOYOTA									
8011.904	IN-EX	Rav 4 IV 2.0 D-4D	1AD-FTV	111220R010	6.0	11.04	40.6	P	S03
8011.904	IN-EX	Rav 4 IV 2.0 D-4D	1AD-FTV	1112227010	6.0	11.04	40.6	P	S03
8011.904	IN-EX	Rav 4 IV 2.0 D-4D 4WD	1AD-FTV	111220R010	6.0	11.04	40.6	P	S03
8011.904	IN-EX	Rav 4 IV 2.0 D-4D 4WD	1AD-FTV	1112227010	6.0	11.04	40.6	P	S03
8011.904	IN-EX	Rav 4 IV 2.2 D-4D 4WD	2AD-FHV	111220R010	6.0	11.04	40.6	P	S03
8011.904	IN-EX	Rav 4 IV 2.2 D-4D 4WD	2AD-FHV	1112227010	6.0	11.04	40.6	P	S03
8011.904	IN-EX	Rav 4 IV 2.2 D-4D 4WD	2AD-FTV	111220R010	6.0	11.04	40.6	P	S03
8011.904	IN-EX	Rav 4 IV 2.2 D-4D 4WD	2AD-FTV	1112227010	6.0	11.04	40.6	P	S03
8021.900	IN-EX	STARLET (_P7_), 1.0 (EP70L)	-		6.0	11.04	40.5	P	G
8021.900	IN-EX	STARLET (_P7_), 1.3 (EP71L)	-		6.0	11.04	40.5	P	G
8021.900	IN-EX	STARLET (_P8_), 1.0 (EP80_)	-		6.0	11.04	40.5	P	G
8021.900	IN-EX	STARLET (_P8_), 1.3 12V (EP81)	-		6.0	11.04	40.5	P	G
8021.900	IN-EX	STARLET (_P8_), 1.3 12V (EP81	-		6.0	11.04	40.5	P	G
8021.900	IN-EX	STARLET (EP91), 1.3	-		6.0	11.04	40.5	P	G
8156.900	IN-EX	STARLET (KP6_), 1.0 (KP60)	2K	1112624020	8.0	13.04	50.0	P-1-6	G
8156.900	IN-EX	STARLET (KP6_), 1.2 S (KP62)	3K-H	1112624020	8.0	13.04	50.0	P-1-6	G
8156.900	IN-EX	STARLET (KP6_), 1.3 S (KP61)	4K	1112624020	8.0	13.04	50.0	P-1-6	G
8156.900	IN-EX	STARLET Station Wagon (KP6_),	2K	1112624020	8.0	13.04	50.0	P-1-6	G
8156.900	IN-EX	STARLET Station Wagon (KP6_),	3K-H	1112624020	8.0	13.04	50.0	P-1-6	G
8156.900	IN-EX	STARLET Station Wagon (KP6_),	3K-H	1112624020	8.0	13.04	50.0	P-1-6	G
8156.900	IN-EX	STARLET Station Wagon (KP6_),	4K-C	1112624020	8.0	13.04	50.0	P-1-6	G
8188.904	IN-EX	URBAN CRUISER (NSP1_, NLP1	1ND-TV	1112230020	6.0	11.09	40.6	P	S03
8188.904	IN-EX	URBAN CRUISER (NSP1_, NLP1	1ND-TV	1112233030	6.0	11.09	40.6	P	S03
8188.904	IN-EX	URBAN CRUISER (NSP1_, NLP1	1ND-TV	1112230020	6.0	11.09	40.6	P	S03
8188.904	IN-EX	URBAN CRUISER (NSP1_, NLP1	1ND-TV	1112233030	6.0	11.09	40.6	P	S03
8014.605	IN-EX	Urban Cruiser 1.3	1NR-FE	1112231041	5.5	10.33	43.5	F	S06
8011.904	IN-EX	Verso 2.0 D-4D	1AD-FTV	111220R010	6.0	11.04	40.6	P	S03
8011.904	IN-EX	Verso 2.0 D-4D	1AD-FTV	1112227010	6.0	11.04	40.6	P	S03
8011.904	IN-EX	Verso 2.2 D-4D	2AD-FHV	111220R010	6.0	11.04	40.6	P	S03
8011.904	IN-EX	Verso 2.2 D-4D	2AD-FHV	1112227010	6.0	11.04	40.6	P	S03
8011.904	IN-EX	Verso 2.2 D-CAT	2AD-FHV	111220R010	6.0	11.04	40.6	P	S03
8011.904	IN-EX	Verso 2.2 D-CAT	2AD-FHV	1112227010	6.0	11.04	40.6	P	S03
8188.904	IN-EX	VERSO S (NLP12_, NCP12_, NS	1ND-TV	1112230020	6.0	11.09	40.6	P	S03
8188.904	IN-EX	VERSO S (NLP12_, NCP12_, NS	1ND-TV	1112233030	6.0	11.09	40.6	P	S03
8014.605	IN-EX	Verso S 1.3	1NR-FE	1112231041	5.5	10.33	43.5	F	S06
8188.904	IN-EX	YARIS (NHP13_, NSP13_, NCP1	1ND-TV	1112230020	6.0	11.09	40.6	P	S03
8188.904	IN-EX	YARIS (NHP13_, NSP13_, NCP1	1ND-TV	1112233030	6.0	11.09	40.6	P	S03
8188.904	IN-EX	YARIS (SCP1_, NLP1_, NCP1_),	1ND-TV	1112230020	6.0	11.09	40.6	P	S03
8188.904	IN-EX	YARIS (SCP1_, NLP1_, NCP1_),	1ND-TV	1112233030	6.0	11.09	40.6	P	S03
8188.904	IN-EX	YARIS (SCP9_, NSP9_, KSP9_,	1ND-TV	1112230020	6.0	11.09	40.6	P	S03
8188.904	IN-EX	YARIS (SCP9_, NSP9_, KSP9_,	1ND-TV	1112233030	6.0	11.09	40.6	P	S03
8152.900	IN-EX	YARIS (SCP9_, NSP9_, KSP9_,	2ZR-FE	1112220020	5.5	10.34	34.5	P	G
8152.900	IN-EX	YARIS (SCP9_, NSP9_, KSP9_,	2ZR-FE	1112222030	5.5	10.34	34.5	P	G
8014.605	IN-EX	Yaris 1.3	1NR-FE	1112231041	5.5	10.33	43.5	F	S06
8014.605	IN-EX	Yaris 1.3 WTi	1NR-FE	1112231041	5.5	10.33	43.5	F	S06
8188.904	IN-EX	YARIS VERSO (_NLP2_, _NCP2_	1ND-TV	1112230020	6.0	11.09	40.6	P	S03
8188.904	IN-EX	YARIS VERSO (_NLP2_, _NCP2_	1ND-TV	1112233030	6.0	11.09	40.6	P	S03
VOLKSWAGEN									
8171.601	IN-EX	A4 (8D2, B5), 1.9 TDI	AJM		7.0	12.06	31.5	F	B
8171.601	IN-EX	A4 (8D2, B5), 1.9 TDI quattro	ATJ/AJM		7.0	12.06	31.5	F	B
8171.601	IN-EX	A4 Avant (8D5, B5), 1.9 TDI	AJM		7.0	12.06	31.5	F	B
8171.601	IN-EX	A4 Avant (8D5, B5), 1.9 TDI quattr	ATJ/AJM		7.0	12.06	31.5	F	B
8171.601	IN-EX	A6 (4B2, C5), 1.9 TDI	AJM		7.0	12.06	31.5	F	B
8171.601	IN-EX	A6 Avant (4B5, C5), 1.9 TDI	AJM		7.0	12.06	31.5	F	B
8068.601	IN-EX	Beetle 1.4 TSI	CAVD		6.0	11.05	39.0	F-1	B
8068.601	IN-EX	Beetle Cabriolet 1.4 TSI	CAVD		6.0	11.05	39.0	F-1	B
8052.701	IN-EX	BORA (1J2), 1.6	AKL/APF/AEH	0371034188	7.0	12.06	36.4	G	B
8037.601	IN-EX	BORA (1J2), 1.6	AVU/BFQ/BJH		6.0	12.06	36.4	F	B
8052.701	IN-EX	BORA (1J2), 1.9 SDI	AGP/AQM	0371034188	7.0	12.06	36.4	G	B
8052.701	IN-EX	BORA (1J2), 1.9 TDI	AGR/ALH	0371034188	7.0	12.06	36.4	G	B
8052.701	IN-EX	BORA (1J2), 1.9 TDI	AHF/ASV	0371034188	7.0	12.06	36.4	G	B

(D1) Internal diameter, (D2) External diameter, (B) Shape, (C) Material

VALVE GUIDES

VOLKSWAGEN

IVT Ref.	Type	Model	Engine	OEM Ref.	D1	D2	Length	B	C
8171.601	IN-EX	BORA (1J2), 1.9 TDI	AJM/AUY		7.0	12.06	31.5	F	B
8052.701	IN-EX	BORA (1J2), 1.9 TDI	ARL	0371034188	7.0	12.06	36.4	G	B
8052.701	IN-EX	BORA (1J2), 1.9 TDI	ASZ	0371034188	7.0	12.06	36.4	G	B
8171.601	IN-EX	BORA (1J2), 1.9 TDI	AXR/ATD		7.0	12.06	31.5	F	B
8052.701	IN-EX	BORA (1J2), 1.9 TDI 4motion	AGR	0371034188	7.0	12.06	36.4	G	B
8171.601	IN-EX	BORA (1J2), 1.9 TDI 4motion	AJM/AUY		7.0	12.06	31.5	F	B
8052.701	IN-EX	BORA (1J2), 1.9 TDI 4motion	ARL	0371034188	7.0	12.06	36.4	G	B
8052.701	IN-EX	BORA (1J2), 1.9 TDI 4motion	ASZ	0371034188	7.0	12.06	36.4	G	B
8171.601	IN-EX	BORA (1J2), 1.9 TDI 4motion	ATD		7.0	12.06	31.5	F	B
8052.701	IN-EX	BORA (1J2), 2.0	APK/AZH/AZJ/AQY/AZG/BB	0371034188	7.0	12.06	36.4	G	B
8052.701	IN-EX	BORA (1J2), 2.0 4motion	AZH/AZJ	0371034188	7.0	12.06	36.4	G	B
8068.601	IN-EX	Bora 1.4 16V	AHW		6.0	11.05	39.0	F-1	B
8068.601	IN-EX	Bora 1.4 16V	AKQ		6.0	11.05	39.0	F-1	B
8068.601	IN-EX	Bora 1.4 16V	APE		6.0	11.05	39.0	F-1	B
8068.601	IN-EX	Bora 1.4 16V	AXP		6.0	11.05	39.0	F-1	B
8068.601	IN-EX	Bora 1.4 16V	BCA		6.0	11.05	39.0	F-1	B
8068.601	IN-EX	Bora 1.6 16V	ATN		6.0	11.05	39.0	F-1	B
8068.601	IN-EX	Bora 1.6 16V	AUS		6.0	11.05	39.0	F-1	B
8068.601	IN-EX	Bora 1.6 16V	AZD		6.0	11.05	39.0	F-1	B
8068.601	IN-EX	Bora 1.6 16V	BCB		6.0	11.05	39.0	F-1	B
8068.601	IN-EX	Bora 1.6 FSI	BAD		6.0	11.05	39.0	F-1	B
8052.701	IN-EX	BORA Kombi (1J6), 1.6	AKL/APF/AEH	0371034188	7.0	12.06	36.4	G	B
8037.601	IN-EX	BORA Kombi (1J6), 1.6	AVU/BFQ		6.0	12.06	36.4	F	B
8052.701	IN-EX	BORA Kombi (1J6), 1.9 TDI	AGR/ALH	0371034188	7.0	12.06	36.4	G	B
8052.701	IN-EX	BORA Kombi (1J6), 1.9 TDI	AHF/ASV	0371034188	7.0	12.06	36.4	G	B
8171.601	IN-EX	BORA Kombi (1J6), 1.9 TDI	AJM/AUY		7.0	12.06	31.5	F	B
8052.701	IN-EX	BORA Kombi (1J6), 1.9 TDI	ARL	0371034188	7.0	12.06	36.4	G	B
8052.701	IN-EX	BORA Kombi (1J6), 1.9 TDI	ASZ	0371034188	7.0	12.06	36.4	G	B
8171.601	IN-EX	BORA Kombi (1J6), 1.9 TDI	AXR/ATD		7.0	12.06	31.5	F	B
8171.601	IN-EX	BORA Kombi (1J6), 1.9 TDI 4moti	AJM/AUY		7.0	12.06	31.5	F	B
8052.701	IN-EX	BORA Kombi (1J6), 1.9 TDI 4moti	ARL	0371034188	7.0	12.06	36.4	G	B
8052.701	IN-EX	BORA Kombi (1J6), 1.9 TDI 4moti	ASZ	0371034188	7.0	12.06	36.4	G	B
8171.601	IN-EX	BORA Kombi (1J6), 1.9 TDI 4moti	ATD		7.0	12.06	31.5	F	B
8052.701	IN-EX	BORA Kombi (1J6), 2.0	APK/AZH/AZJ/AQY/AZG	0371034188	7.0	12.06	36.4	G	B
8052.701	IN-EX	BORA Kombi (1J6), 2.0 4motion	AZH/AZJ	0371034188	7.0	12.06	36.4	G	B
8068.601	IN-EX	Bora SW 1.4 16V	AHW		6.0	11.05	39.0	F-1	B
8068.601	IN-EX	Bora SW 1.4 16V	AXP		6.0	11.05	39.0	F-1	B
8068.601	IN-EX	Bora SW 1.4 16V	BCA		6.0	11.05	39.0	F-1	B
8068.601	IN-EX	Bora SW 1.6 16V	ATN		6.0	11.05	39.0	F-1	B
8068.601	IN-EX	Bora SW 1.6 16V	AUS		6.0	11.05	39.0	F-1	B
8068.601	IN-EX	Bora SW 1.6 16V	AZD		6.0	11.05	39.0	F-1	B
8068.601	IN-EX	Bora SW 1.6 16V	BCB		6.0	11.05	39.0	F-1	B
8068.601	IN-EX	Bora SW 1.6 FSI	BAD		6.0	11.05	39.0	F-1	B
8062.701	IN-EX	CADDY 1.4	AEX	032103419A	7.0	11.07	33.0	G	B
8062.701	IN-EX	CADDY 1.4	AKV	032103419A	7.0	11.07	33.0	G	B
8054.701	IN-EX	CADDY I (14), 1.5	JB	056103419A	8.0	12.06	36.5	G	B
8054.701	IN-EX	CADDY I (14), 1.6	EM	056103419A	8.0	12.06	36.5	G	B
8054.701	IN-EX	CADDY I (14), 1.6	EW	056103419A	8.0	12.06	36.5	G	B
8054.701	IN-EX	CADDY I (14), 1.6 D	JK/ME	056103419A	8.0	12.06	36.5	G	B
8052.701	IN-EX	CADDY II Kasten (9K9A), 1.9 D	1Y	0371034188	7.0	12.06	36.4	G	B
8054.701	IN-EX	CADDY II Kasten (9K9A), 1.9 D	1Y	056103419A	8.0	12.06	36.5	G	B
8052.701	IN-EX	CADDY II Kasten (9K9A), 1.9 SDI	AYQ/AEY	0371034188	7.0	12.06	36.4	G	B
8052.701	IN-EX	CADDY II Kasten (9K9A), 1.9 TDI	1Z/AHU/ALH	0371034188	7.0	12.06	36.4	G	B
8054.701	IN-EX	CADDY II Kasten (9K9A), 75 1.6	1F	056103419A	8.0	12.06	36.5	G	B
8054.701	IN-EX	CADDY II Kombi (9K9B), 1.6	1F	056103419A	8.0	12.06	36.5	G	B
8052.701	IN-EX	CADDY II Kombi (9K9B), 1.9 D	1Y	0371034188	7.0	12.06	36.4	G	B
8054.701	IN-EX	CADDY II Kombi (9K9B), 1.9 D	1Y	056103419A	8.0	12.06	36.5	G	B
8052.701	IN-EX	CADDY II Kombi (9K9B), 1.9 SDI	AYQ/AEY	0371034188	7.0	12.06	36.4	G	B
8052.701	IN-EX	CADDY II Kombi (9K9B), 1.9 TDI	ALE/AHU/ALH	0371034188	7.0	12.06	36.4	G	B
8052.701	IN-EX	CADDY II Pick-up (9U7), 1.9 D	AEF	0371034188	7.0	12.06	36.4	G	B
8054.701	IN-EX	CADDY II Pick-up (9U7), 1.9 D	AEF	056103419A	8.0	12.06	36.5	G	B
8068.601	IN-EX	Caddy II SW 1.4 16V	AUA		6.0	11.05	39.0	F-1	B

(D1) Internal diameter, (D2) External diameter, (B) Shape, (C) Material

VALVE GUIDES

VOLKSWAGEN

IVT Ref.	Type	Model	Engine	OEM Ref.	D1	D2	Length	B	C
8037.601	IN-EX	CADDY III Kasten (2KA, 2KH, 2C	BGU/BSF/BSE		6.0	12.06	36.4	F	B
8052.701	IN-EX	CADDY III Kasten (2KA, 2KH, 2C	BJB/BLS	0371034188	7.0	12.06	36.4	G	B
8037.601	IN-EX	CADDY III Kombi (2KB, 2KJ, 2CB,	BGU/BSF/BSE		6.0	12.06	36.4	F	B
8052.701	IN-EX	CADDY III Kombi (2KB, 2KJ, 2CB,	BJB/BLS	0371034188	7.0	12.06	36.4	G	B
8068.601	IN-EX	Caddy III SW 1.4 16V	BCA		6.0	11.05	39.0	F-1	B
8068.601	IN-EX	Caddy III SW 1.4 16V	BUD		6.0	11.05	39.0	F-1	B
8054.701	IN-EX	CORRADO (53I), 1.8 G60	PG	056103419A	8.0	12.06	36.5	G	B
8054.701	IN-EX	CORRADO (53I), 2.0 i	ADY/2E	056103419A	8.0	12.06	36.5	G	B
8078.601	IN-EX	CORRADO GT 16V	KR	027103415	7.0	12.06	38.0	F	B
8064.701	IN-EX	CORRADO GT 16V	KR	027103419	7.0	12.06	38.0	G	B
8078.601	IN-EX	CORRADO GTi 16V	PL / PR	027103415	7.0	12.06	38.0	F	B
8064.701	IN-EX	CORRADO GTi 16V	PL / PR	027103419	7.0	12.06	38.0	G	B
8054.701	IN-EX	DERBY (86), 0.9	HA	056103419A	8.0	12.06	36.5	G	B
8054.701	IN-EX	DERBY (86), 1.1	HB	056103419A	8.0	12.06	36.5	G	B
8054.701	IN-EX	DERBY (86), 1.3	HH	056103419A	8.0	12.06	36.5	G	B
8054.701	IN-EX	DERBY (86C, 80), 1.1	HB	056103419A	8.0	12.06	36.5	G	B
8054.701	IN-EX	DERBY (86C, 80), 1.3	HH	056103419A	8.0	12.06	36.5	G	B
8170.601	IN-EX	EOS (1F7, 1F8), 2.0 TDI	BMM		6.0	10.06	42.0	F	B
8068.601	IN-EX	Eos 1.4 TSI	CAVD		6.0	11.05	39.0	F-1	B
8068.601	IN-EX	Eos 1.4 TSI	CAXA		6.0	11.05	39.0	F-1	B
8068.601	IN-EX	Eos 1.6 FSI	BLF		6.0	11.05	39.0	F-1	B
8062.701	IN-EX	GOLF 1.4	AEX	032103419A	7.0	11.07	33.0	G	B
8071.701	IN-EX	GOLF 1.8 Carat	GU	049103419	8.0	12.06	42.3	G	B
8170.601	IN-EX	GOLF ALLTRACK (BA5), 2.0 TDI	CRLB/CRBC		6.0	10.06	42.0	F	B
8071.701	IN-EX	GOLF C / CL / GL / Cabriolet	EZ	049103419	8.0	12.06	42.3	G	B
8078.601	IN-EX	GOLF GTi 16V	PL / PR	027103415	7.0	12.06	38.0	F	B
8064.701	IN-EX	GOLF GTi 16V	PL / PR	027103419	7.0	12.06	38.0	G	B
8054.701	IN-EX	GOLF I (17), 1.1	FJ	056103419A	8.0	12.06	36.5	G	B
8054.701	IN-EX	GOLF I (17), 1.1	GG/FA	056103419A	8.0	12.06	36.5	G	B
8054.701	IN-EX	GOLF I (17), 1.3	GF	056103419A	8.0	12.06	36.5	G	B
8054.701	IN-EX	GOLF I (17), 1.5	FH	056103419A	8.0	12.06	36.5	G	B
8054.701	IN-EX	GOLF I (17), 1.5	JB	056103419A	8.0	12.06	36.5	G	B
8054.701	IN-EX	GOLF I (17), 1.5 D	CK	056103419A	8.0	12.06	36.5	G	B
8054.701	IN-EX	GOLF I (17), 1.6	EW/HN	056103419A	8.0	12.06	36.5	G	B
8054.701	IN-EX	GOLF I (17), 1.6	FN/FP/EM	056103419A	8.0	12.06	36.5	G	B
8054.701	IN-EX	GOLF I (17), 1.6 D	JK/CR	056103419A	8.0	12.06	36.5	G	B
8054.701	IN-EX	GOLF I (17), 1.6 GTI	EG	056103419A	8.0	12.06	36.5	G	B
8054.701	IN-EX	GOLF I (17), 1.6 TD	CY	056103419A	8.0	12.06	36.5	G	B
8054.701	IN-EX	GOLF I (17), 1.8 GTI	JJ/DX	056103419A	8.0	12.06	36.5	G	B
8054.701	IN-EX	GOLF I Cabriolet (155), 1.5	JB	056103419A	8.0	12.06	36.5	G	B
8054.701	IN-EX	GOLF I Cabriolet (155), 1.6	EG	056103419A	8.0	12.06	36.5	G	B
8054.701	IN-EX	GOLF I Cabriolet (155), 1.6	EW/HN	056103419A	8.0	12.06	36.5	G	B
8054.701	IN-EX	GOLF I Cabriolet (155), 1.6	RE	056103419A	8.0	12.06	36.5	G	B
8054.701	IN-EX	GOLF I Cabriolet (155), 1.8	2H	056103419A	8.0	12.06	36.5	G	B
8054.701	IN-EX	GOLF I Cabriolet (155), 1.8	EV/PB/DX	056103419A	8.0	12.06	36.5	G	B
8054.701	IN-EX	GOLF II (19E, 1G1), 1.0	GN	056103419A	8.0	12.06	36.5	G	B
8054.701	IN-EX	GOLF II (19E, 1G1), 1.0	HZ	056103419A	8.0	12.06	36.5	G	B
8054.701	IN-EX	GOLF II (19E, 1G1), 1.3	GT	056103419A	8.0	12.06	36.5	G	B
8054.701	IN-EX	GOLF II (19E, 1G1), 1.6	HM/ABN/EZ	056103419A	8.0	12.06	36.5	G	B
8054.701	IN-EX	GOLF II (19E, 1G1), 1.6	PN	056103419A	8.0	12.06	36.5	G	B
8054.701	IN-EX	GOLF II (19E, 1G1), 1.6	RF	056103419A	8.0	12.06	36.5	G	B
8054.701	IN-EX	GOLF II (19E, 1G1), 1.6 D	-	056103419A	8.0	12.06	36.5	G	B
8054.701	IN-EX	GOLF II (19E, 1G1), 1.6 D	ME/JP	056103419A	8.0	12.06	36.5	G	B
8054.701	IN-EX	GOLF II (19E, 1G1), 1.6 TD	1V	056103419A	8.0	12.06	36.5	G	B
8054.701	IN-EX	GOLF II (19E, 1G1), 1.6 TD	JR/MF	056103419A	8.0	12.06	36.5	G	B
8054.701	IN-EX	GOLF II (19E, 1G1), 1.6 TD	RA/SB	056103419A	8.0	12.06	36.5	G	B
8054.701	IN-EX	GOLF II (19E, 1G1), 1.8	RH	056103419A	8.0	12.06	36.5	G	B
8054.701	IN-EX	GOLF II (19E, 1G1), 1.8 GTI	EV/GZ/PB/DX	056103419A	8.0	12.06	36.5	G	B
8054.701	IN-EX	GOLF II (19E, 1G1), 1.8 GTI	RD	056103419A	8.0	12.06	36.5	G	B
8054.701	IN-EX	GOLF II (19E, 1G1), 1.8 GTI G60	PG	056103419A	8.0	12.06	36.5	G	B
8054.701	IN-EX	GOLF II (19E, 1G1), 1.8 GTI G60	PG/1H	056103419A	8.0	12.06	36.5	G	B
8054.701	IN-EX	GOLF II (19E, 1G1), 1.8 GTI KAT	PF	056103419A	8.0	12.06	36.5	G	B

(D1) Internal diameter, (D2) External diameter, (B) Shape, (C) Material

VALVE GUIDES

VOLKSWAGEN

IVT Ref.	Type	Model	Engine	OEM Ref.	D1	D2	Length	B	C
8054.701	IN-EX	GOLF II (19E, 1G1), 1.8 i KAT	GX/RP	056103419A	8.0	12.06	36.5	G	B
8054.701	IN-EX	GOLF II (19E, 1G1), 1.8 i Syncro	RP	056103419A	8.0	12.06	36.5	G	B
8054.701	IN-EX	GOLF II (19E, 1G1), 1.8 Syncro	RH	056103419A	8.0	12.06	36.5	G	B
8054.701	IN-EX	GOLF III (1H1), 1.4	AEX/ABD	056103419A	8.0	12.06	36.5	G	B
8054.701	IN-EX	GOLF III (1H1), 1.6	AEK/AFT/AKS	056103419A	8.0	12.06	36.5	G	B
8054.701	IN-EX	GOLF III (1H1), 1.8	AAM	056103419A	8.0	12.06	36.5	G	B
8054.701	IN-EX	GOLF III (1H1), 1.8	ACC/ADZ/ABS	056103419A	8.0	12.06	36.5	G	B
8054.701	IN-EX	GOLF III (1H1), 1.8 Syncro (1HX1	ADZ/ABS	056103419A	8.0	12.06	36.5	G	B
8052.701	IN-EX	GOLF III (1H1), 1.9 D	1Y	0371034188	7.0	12.06	36.4	G	B
8054.701	IN-EX	GOLF III (1H1), 1.9 D	1Y	056103419A	8.0	12.06	36.5	G	B
8052.701	IN-EX	GOLF III (1H1), 1.9 SDI	AEY	0371034188	7.0	12.06	36.4	G	B
8052.701	IN-EX	GOLF III (1H1), 1.9 TD,GTD	AAZ	0371034188	7.0	12.06	36.4	G	B
8054.701	IN-EX	GOLF III (1H1), 1.9 TD,GTD	AAZ	056103419A	8.0	12.06	36.5	G	B
8052.701	IN-EX	GOLF III (1H1), 1.9 TDI	AFN	0371034188	7.0	12.06	36.4	G	B
8052.701	IN-EX	GOLF III (1H1), 1.9 TDI	ALE/1Z/AHU	0371034188	7.0	12.06	36.4	G	B
8054.701	IN-EX	GOLF III (1H1), 1.9 TDI	ALE/1Z/AHU	056103419A	8.0	12.06	36.5	G	B
8052.701	IN-EX	GOLF III (1H1), 1.9 TDI Syncro (1	ALE/1Z/AHU	0371034188	7.0	12.06	36.4	G	B
8054.701	IN-EX	GOLF III (1H1), 1.9 TDI Syncro (1	ALE/1Z/AHU	056103419A	8.0	12.06	36.5	G	B
8052.701	IN-EX	GOLF III (1H1), 2.0	ABA/ADY/AKR/2E/AGG	0371034188	7.0	12.06	36.4	G	B
8054.701	IN-EX	GOLF III (1H1), 2.0	ABA/ADY/AKR/2E/AGG	056103419A	8.0	12.06	36.5	G	B
8052.701	IN-EX	GOLF III (1H1), 2.0 GTI 16V	ABF	0371034188	7.0	12.06	36.4	G	B
8052.701	IN-EX	GOLF III (1H1), 2.0 Syncro (1HX1	AGG	0371034188	7.0	12.06	36.4	G	B
8054.701	IN-EX	GOLF III Cabriolet (1E7), 1.6	AEK/AFT/AKS	056103419A	8.0	12.06	36.5	G	B
8054.701	IN-EX	GOLF III Cabriolet (1E7), 1.8	AAM	056103419A	8.0	12.06	36.5	G	B
8054.701	IN-EX	GOLF III Cabriolet (1E7), 1.8	ADZ/ABS	056103419A	8.0	12.06	36.5	G	B
8052.701	IN-EX	GOLF III Cabriolet (1E7), 1.9 TDI	AFN	0371034188	7.0	12.06	36.4	G	B
8052.701	IN-EX	GOLF III Cabriolet (1E7), 1.9 TDI	ALE/1Z/AHU	0371034188	7.0	12.06	36.4	G	B
8054.701	IN-EX	GOLF III Cabriolet (1E7), 1.9 TDI	ALE/1Z/AHU	056103419A	8.0	12.06	36.5	G	B
8052.701	IN-EX	GOLF III Cabriolet (1E7), 2.0	ADY/AKR/2E/AGG	0371034188	7.0	12.06	36.4	G	B
8054.701	IN-EX	GOLF III Cabriolet (1E7), 2.0	ADY/AKR/2E/AGG	056103419A	8.0	12.06	36.5	G	B
8054.701	IN-EX	GOLF III Variant (1H5), 1.4	ABD	056103419A	8.0	12.06	36.5	G	B
8052.701	IN-EX	GOLF III Variant (1H5), 1.6	AEK/AFT/AKS	0371034188	7.0	12.06	36.4	G	B
8054.701	IN-EX	GOLF III Variant (1H5), 1.8	ADZ/ABS/ANP	056103419A	8.0	12.06	36.5	G	B
8054.701	IN-EX	GOLF III Variant (1H5), 1.8	ANN/AAM	056103419A	8.0	12.06	36.5	G	B
8054.701	IN-EX	GOLF III Variant (1H5), 1.8 Syncr	ADZ	056103419A	8.0	12.06	36.5	G	B
8054.701	IN-EX	GOLF III Variant (1H5), 1.9 D	1Y	056103419A	8.0	12.06	36.5	G	B
8052.701	IN-EX	GOLF III Variant (1H5), 1.9 SDI	AEY	0371034188	7.0	12.06	36.4	G	B
8052.701	IN-EX	GOLF III Variant (1H5), 1.9 TD	AAZ	0371034188	7.0	12.06	36.4	G	B
8054.701	IN-EX	GOLF III Variant (1H5), 1.9 TD	AAZ	056103419A	8.0	12.06	36.5	G	B
8052.701	IN-EX	GOLF III Variant (1H5), 1.9 TDI	AFN	0371034188	7.0	12.06	36.4	G	B
8052.701	IN-EX	GOLF III Variant (1H5), 1.9 TDI	ALE/1Z/AHU	0371034188	7.0	12.06	36.4	G	B
8054.701	IN-EX	GOLF III Variant (1H5), 1.9 TDI	ALE/1Z/AHU	056103419A	8.0	12.06	36.5	G	B
8052.701	IN-EX	GOLF III Variant (1H5), 1.9 TDI Sy	ALE/1Z/AHU	0371034188	7.0	12.06	36.4	G	B
8054.701	IN-EX	GOLF III Variant (1H5), 1.9 TDI Sy	ALE/1Z/AHU	056103419A	8.0	12.06	36.5	G	B
8052.701	IN-EX	GOLF III Variant (1H5), 2.0	ADY/AKR/2E/AGG	0371034188	7.0	12.06	36.4	G	B
8054.701	IN-EX	GOLF III Variant (1H5), 2.0	ADY/AKR/2E/AGG	056103419A	8.0	12.06	36.5	G	B
8052.701	IN-EX	GOLF III Variant (1H5), 2.0 Syncr	AGG	0371034188	7.0	12.06	36.4	G	B
8052.701	IN-EX	GOLF IV (1J1), 1.6	AKL/APF/AEH	0371034188	7.0	12.06	36.4	G	B
8037.601	IN-EX	GOLF IV (1J1), 1.6	AVU/BFQ/BJH		6.0	12.06	36.4	F	B
8052.701	IN-EX	GOLF IV (1J1), 1.9 SDI	AGP/AQM	0371034188	7.0	12.06	36.4	G	B
8054.701	IN-EX	GOLF IV (1J1), 1.9 SDI	AGP/AQM	056103419A	8.0	12.06	36.5	G	B
8052.701	IN-EX	GOLF IV (1J1), 1.9 TDI	AGR/ALH	0371034188	7.0	12.06	36.4	G	B
8052.701	IN-EX	GOLF IV (1J1), 1.9 TDI	AHF/ASV	0371034188	7.0	12.06	36.4	G	B
8171.601	IN-EX	GOLF IV (1J1), 1.9 TDI	AJM/AUY		7.0	12.06	31.5	F	B
8052.701	IN-EX	GOLF IV (1J1), 1.9 TDI	ARL	0371034188	7.0	12.06	36.4	G	B
8052.701	IN-EX	GOLF IV (1J1), 1.9 TDI	ASZ	0371034188	7.0	12.06	36.4	G	B
8171.601	IN-EX	GOLF IV (1J1), 1.9 TDI	AXR/ATD		7.0	12.06	31.5	F	B
8052.701	IN-EX	GOLF IV (1J1), 1.9 TDI 4motion	AGR	0371034188	7.0	12.06	36.4	G	B
8171.601	IN-EX	GOLF IV (1J1), 1.9 TDI 4motion	AJM/AUY		7.0	12.06	31.5	F	B
8052.701	IN-EX	GOLF IV (1J1), 1.9 TDI 4motion	ARL	0371034188	7.0	12.06	36.4	G	B
8052.701	IN-EX	GOLF IV (1J1), 1.9 TDI 4motion	ASZ	0371034188	7.0	12.06	36.4	G	B
8171.601	IN-EX	GOLF IV (1J1), 1.9 TDI 4motion	ATD		7.0	12.06	31.5	F	B

(D1) Internal diameter, (D2) External diameter, (B) Shape, (C) Material

VALVE GUIDES

VOLKSWAGEN

IVT Ref.	Type	Model	Engine	OEM Ref.	D1	D2	Length	B	C
8052.701	IN-EX	GOLF IV (1J1), 2.0	APK/AZJ/AQY/BER/AZG	0371034188	7.0	12.06	36.4	G	B
8052.701	IN-EX	GOLF IV (1J1), 2.0 4motion	AZH/AZJ	0371034188	7.0	12.06	36.4	G	B
8068.601	IN-EX	Golf IV 1.4 16V	AHW		6.0	11.05	39.0	F-1	B
8068.601	IN-EX	Golf IV 1.4 16V	AKQ		6.0	11.05	39.0	F-1	B
8068.601	IN-EX	Golf IV 1.4 16V	APE		6.0	11.05	39.0	F-1	B
8068.601	IN-EX	Golf IV 1.4 16V	ATN		6.0	11.05	39.0	F-1	B
8068.601	IN-EX	Golf IV 1.4 16V	AUS		6.0	11.05	39.0	F-1	B
8068.601	IN-EX	Golf IV 1.4 16V	AXP		6.0	11.05	39.0	F-1	B
8068.601	IN-EX	Golf IV 1.4 16V	AZD		6.0	11.05	39.0	F-1	B
8068.601	IN-EX	Golf IV 1.4 16V	BCA		6.0	11.05	39.0	F-1	B
8068.601	IN-EX	Golf IV 1.4 16V	BCB		6.0	11.05	39.0	F-1	B
8068.601	IN-EX	Golf IV 1.6 FSI	BAD		6.0	11.05	39.0	F-1	B
8052.701	IN-EX	GOLF IV Cabriolet (1E7), 1.6	AFT/AKS	0371034188	7.0	12.06	36.4	G	B
8054.701	IN-EX	GOLF IV Cabriolet (1E7), 1.8	ADZ/ANP	056103419A	8.0	12.06	36.5	G	B
8054.701	IN-EX	GOLF IV Cabriolet (1E7), 1.8	ANN/AAM	056103419A	8.0	12.06	36.5	G	B
8052.701	IN-EX	GOLF IV Cabriolet (1E7), 1.9 TDI	ALE/AHU	0371034188	7.0	12.06	36.4	G	B
8052.701	IN-EX	GOLF IV Cabriolet (1E7), 1.9 TDI	AVG/AFN	0371034188	7.0	12.06	36.4	G	B
8052.701	IN-EX	GOLF IV Cabriolet (1E7), 2.0	ATU/AKR/AWF/AGG/AWG	0371034188	7.0	12.06	36.4	G	B
8052.701	IN-EX	GOLF IV Variant (1J5), 1.6	AKL/APF/AEH	0371034188	7.0	12.06	36.4	G	B
8037.601	IN-EX	GOLF IV Variant (1J5), 1.6	AVU/BFQ		6.0	12.06	36.4	F	B
8052.701	IN-EX	GOLF IV Variant (1J5), 1.9 SDI	AGP/AQM	0371034188	7.0	12.06	36.4	G	B
8054.701	IN-EX	GOLF IV Variant (1J5), 1.9 SDI	AGP/AQM	056103419A	8.0	12.06	36.5	G	B
8052.701	IN-EX	GOLF IV Variant (1J5), 1.9 TDI	AGR/ALH	0371034188	7.0	12.06	36.4	G	B
8052.701	IN-EX	GOLF IV Variant (1J5), 1.9 TDI	AHF/ASV	0371034188	7.0	12.06	36.4	G	B
8171.601	IN-EX	GOLF IV Variant (1J5), 1.9 TDI	AJM/AUY		7.0	12.06	31.5	F	B
8052.701	IN-EX	GOLF IV Variant (1J5), 1.9 TDI	ASZ	0371034188	7.0	12.06	36.4	G	B
8171.601	IN-EX	GOLF IV Variant (1J5), 1.9 TDI	AXR/ATD		7.0	12.06	31.5	F	B
8052.701	IN-EX	GOLF IV Variant (1J5), 1.9 TDI 4	AGR	0371034188	7.0	12.06	36.4	G	B
8171.601	IN-EX	GOLF IV Variant (1J5), 1.9 TDI 4	AJM		7.0	12.06	31.5	F	B
8052.701	IN-EX	GOLF IV Variant (1J5), 1.9 TDI 4	ARL	0371034188	7.0	12.06	36.4	G	B
8052.701	IN-EX	GOLF IV Variant (1J5), 1.9 TDI 4	ASZ	0371034188	7.0	12.06	36.4	G	B
8171.601	IN-EX	GOLF IV Variant (1J5), 1.9 TDI 4	ATD		7.0	12.06	31.5	F	B
8052.701	IN-EX	GOLF IV Variant (1J5), 2.0	APK/AZJ/AQY	0371034188	7.0	12.06	36.4	G	B
8052.701	IN-EX	GOLF IV Variant (1J5), 2.0 4motio	AZH/AZJ	0371034188	7.0	12.06	36.4	G	B
8068.601	IN-EX	Golf IV Variant 1.4 16V	AHW		6.0	11.05	39.0	F-1	B
8068.601	IN-EX	Golf IV Variant 1.6 16V	ATN		6.0	11.05	39.0	F-1	B
8068.601	IN-EX	Golf IV Variant 1.6 16V	AUS		6.0	11.05	39.0	F-1	B
8068.601	IN-EX	Golf IV Variant 1.6 16V	AZD		6.0	11.05	39.0	F-1	B
8068.601	IN-EX	Golf IV Variant 1.6 16V	BCB		6.0	11.05	39.0	F-1	B
8068.601	IN-EX	Golf IV Variant 1.6 FSI	BAD		6.0	11.05	39.0	F-1	B
8052.701	IN-EX	GOLF PLUS (5M1, 521), 1.9 TDI	BXE/BKC/BLS	0371034188	7.0	12.06	36.4	G	B
8170.601	IN-EX	GOLF PLUS (5M1, 521), 2.0 TDI	AZV/CBDA/CFHB		6.0	10.06	42.0	F	B
8170.601	IN-EX	GOLF PLUS (5M1, 521), 2.0 TDI	BMM		6.0	10.06	42.0	F	B
8170.601	IN-EX	GOLF PLUS (5M1, 521), 2.0 TDI 1	CBDB/CFHC/BKD		6.0	10.06	42.0	F	B
8068.601	IN-EX	Golf Plus 1.4 16V	BCA		6.0	11.05	39.0	F-1	B
8068.601	IN-EX	Golf Plus 1.4 16V	BUD		6.0	11.05	39.0	F-1	B
8068.601	IN-EX	Golf Plus 1.4 TSI	BLG		6.0	11.05	39.0	F-1	B
8068.601	IN-EX	Golf Plus 1.4 TSI	BMY		6.0	11.05	39.0	F-1	B
8068.601	IN-EX	Golf Plus 1.4 TSI	CAVD		6.0	11.05	39.0	F-1	B
8068.601	IN-EX	Golf Plus 1.4 TSI	CAXA		6.0	11.05	39.0	F-1	B
8068.601	IN-EX	Golf Plus 1.6 FSI	BLF		6.0	11.05	39.0	F-1	B
8170.601	IN-EX	GOLF SPORTSVAN (AM1), 2.0 T	CRLB		6.0	10.06	42.0	F	B
8037.601	IN-EX	GOLF V (1K1), 1.6	BGU/BSF/BSE		6.0	12.06	36.4	F	B
8052.701	IN-EX	GOLF V (1K1), 1.9 TDI	BXE/BKC/BLS	0371034188	7.0	12.06	36.4	G	B
8052.701	IN-EX	GOLF V (1K1), 1.9 TDI	BXF/BXJ/BRU	0371034188	7.0	12.06	36.4	G	B
8052.701	IN-EX	GOLF V (1K1), 1.9 TDI 4motion	BXE/BKC/BLS	0371034188	7.0	12.06	36.4	G	B
8170.601	IN-EX	GOLF V (1K1), 2.0 TDI	AZV		6.0	10.06	42.0	F	B
8170.601	IN-EX	GOLF V (1K1), 2.0 TDI	BMM		6.0	10.06	42.0	F	B
8170.601	IN-EX	GOLF V (1K1), 2.0 TDI 16V	BKD		6.0	10.06	42.0	F	B
8170.601	IN-EX	GOLF V (1K1), 2.0 TDI 16V 4moti	BKD		6.0	10.06	42.0	F	B
8170.601	IN-EX	GOLF V (1K1), 2.0 TDI 4motion	BMM		6.0	10.06	42.0	F	B
8068.601	IN-EX	Golf V 1.4 16V	BCA		6.0	11.05	39.0	F-1	B

(D1) Internal diameter, (D2) External diameter, (B) Shape, (C) Material

VALVE GUIDES

VOLKSWAGEN

IVT Ref.	Type	Model	Engine	OEM Ref.	D1	D2	Length	B	C
8068.601	IN-EX	Golf V 1.4 16V	BUD		6.0	11.05	39.0	F-1	B
8068.601	IN-EX	Golf V 1.4 FSI	BKG		6.0	11.05	39.0	F-1	B
8068.601	IN-EX	Golf V 1.4 FSI	BLN		6.0	11.05	39.0	F-1	B
8068.601	IN-EX	Golf V 1.4 TSI	BLG		6.0	11.05	39.0	F-1	B
8068.601	IN-EX	Golf V 1.4 TSI	BMY		6.0	11.05	39.0	F-1	B
8068.601	IN-EX	Golf V 1.4 TSI	CAXA		6.0	11.05	39.0	F-1	B
8068.601	IN-EX	Golf V 1.6 FSI	BAG		6.0	11.05	39.0	F-1	B
8068.601	IN-EX	Golf V 1.6 FSI	BAG		6.0	11.05	39.0	F-1	B
8068.601	IN-EX	Golf V 1.6 FSI	BLP		6.0	11.05	39.0	F-1	B
8068.601	IN-EX	Golf V 1.6 FSI	BLP		6.0	11.05	39.0	F-1	B
8037.601	IN-EX	GOLF V Variant (1K5), 1.6	BGU/CCSA/BSF/BSE		6.0	12.06	36.4	F	B
8052.701	IN-EX	GOLF V Variant (1K5), 1.9 TDI	BXE/BLS	0371034188	7.0	12.06	36.4	G	B
8052.701	IN-EX	GOLF V Variant (1K5), 1.9 TDI 4m	BLS	0371034188	7.0	12.06	36.4	G	B
8170.601	IN-EX	GOLF V Variant (1K5), 2.0 TDI	AZV		6.0	10.06	42.0	F	B
8170.601	IN-EX	GOLF V Variant (1K5), 2.0 TDI	BMM		6.0	10.06	42.0	F	B
8170.601	IN-EX	GOLF V Variant (1K5), 2.0 TDI 16	CBDB/BKD		6.0	10.06	42.0	F	B
8068.601	IN-EX	Golf V Variant 1.4	BUD		6.0	11.05	39.0	F-1	B
8068.601	IN-EX	Golf V Variant 1.4 TSI	BLG		6.0	11.05	39.0	F-1	B
8068.601	IN-EX	Golf V Variant 1.4 TSI	BMY		6.0	11.05	39.0	F-1	B
8068.601	IN-EX	Golf V Variant 1.4 TSI	CAVD		6.0	11.05	39.0	F-1	B
8068.601	IN-EX	Golf V Variant 1.4 TSI	CAXA		6.0	11.05	39.0	F-1	B
8037.601	IN-EX	GOLF VI (5K1), 1.6	CCSA/BSF/CMXA/BSE		6.0	12.06	36.4	F	B
8037.601	IN-EX	GOLF VI (5K1), 1.6 BiFuel	CHGA		6.0	12.06	36.4	F	B
8037.601	IN-EX	GOLF VI (5K1), 1.6 MultiFuel	CCSA/CMXA		6.0	12.06	36.4	F	B
8068.601	IN-EX	Golf VI 1.4	CGGA		6.0	11.05	39.0	F-1	B
8068.601	IN-EX	Golf VI 1.4 TSI	CAVD		6.0	11.05	39.0	F-1	B
8068.601	IN-EX	Golf VI 1.4 TSI	CAXA		6.0	11.05	39.0	F-1	B
8068.601	IN-EX	Golf VI Cabriolet 1.4 TSI	CAVD		6.0	11.05	39.0	F-1	B
8068.601	IN-EX	Golf VI Cabriolet 1.4 TSI	CAXA		6.0	11.05	39.0	F-1	B
8037.601	IN-EX	GOLF VI Variant (AJ5), 1.6	CCSA/BSF/CMXA/BSE		6.0	12.06	36.4	F	B
8068.601	IN-EX	Golf VI Variant 1.4	BUD		6.0	11.05	39.0	F-1	B
8068.601	IN-EX	Golf VI Variant 1.4	CGGA		6.0	11.05	39.0	F-1	B
8068.601	IN-EX	Golf VI Variant 1.4 TSI	CAVD		6.0	11.05	39.0	F-1	B
8068.601	IN-EX	Golf VI Variant 1.4 TSI	CAXA		6.0	11.05	39.0	F-1	B
8170.601	IN-EX	GOLF VII (5G1, BE1), 2.0 TDI	CRMB/CRLB/CKFC/CRBC/C		6.0	10.06	42.0	F	B
8170.601	IN-EX	GOLF VII (5G1, BE1), 2.0 TDI 4m	CRMB/CRLB/CKFC/CRBC		6.0	10.06	42.0	F	B
8170.601	IN-EX	GOLF VII Kombi (BA5), 2.0 TDI	CRLB/CRBC/CRUA		6.0	10.06	42.0	F	B
8170.601	IN-EX	GOLF VII Kombi (BA5), 2.0 TDI 4	CRLB/CRBC		6.0	10.06	42.0	F	B
8052.701	IN-EX	ILTIS (183), 1.6 TD	1C	0371034188	7.0	12.06	36.4	G	B
8054.701	IN-EX	ILTIS (183), 1.6 TD	1C	056103419A	8.0	12.06	36.5	G	B
8071.701	IN-EX	JETTA C / CL / GL	EZ	049103419	8.0	12.06	42.3	G	B
8078.601	IN-EX	JETTA GTi 16V	PL / PR	027103415	7.0	12.06	38.0	F	B
8064.701	IN-EX	JETTA GTi 16V	PL / PR	027103419	7.0	12.06	38.0	G	B
8054.701	IN-EX	JETTA I (16), 1.1	GG/FA	056103419A	8.0	12.06	36.5	G	B
8054.701	IN-EX	JETTA I (16), 1.3	GF	056103419A	8.0	12.06	36.5	G	B
8054.701	IN-EX	JETTA I (16), 1.5	JB	056103419A	8.0	12.06	36.5	G	B
8054.701	IN-EX	JETTA I (16), 1.5 D	CK	056103419A	8.0	12.06	36.5	G	B
8054.701	IN-EX	JETTA I (16), 1.6	FR	056103419A	8.0	12.06	36.5	G	B
8054.701	IN-EX	JETTA I (16), 1.6 D	JK/CR	056103419A	8.0	12.06	36.5	G	B
8054.701	IN-EX	JETTA I (16), 1.6 GLI	EG	056103419A	8.0	12.06	36.5	G	B
8054.701	IN-EX	JETTA I (16), 1.6 TD	CY	056103419A	8.0	12.06	36.5	G	B
8054.701	IN-EX	JETTA I (16), 1.8	JJ/DX	056103419A	8.0	12.06	36.5	G	B
8054.701	IN-EX	JETTA II (19E, 1G2, 165), 1.3	GT	056103419A	8.0	12.06	36.5	G	B
8054.701	IN-EX	JETTA II (19E, 1G2, 165), 1.6	HM/ABN/EZ	056103419A	8.0	12.06	36.5	G	B
8054.701	IN-EX	JETTA II (19E, 1G2, 165), 1.6	PN	056103419A	8.0	12.06	36.5	G	B
8054.701	IN-EX	JETTA II (19E, 1G2, 165), 1.6	RF	056103419A	8.0	12.06	36.5	G	B
8054.701	IN-EX	JETTA II (19E, 1G2, 165), 1.6 D	ME/JP	056103419A	8.0	12.06	36.5	G	B
8054.701	IN-EX	JETTA II (19E, 1G2, 165), 1.6 TD	1V	056103419A	8.0	12.06	36.5	G	B
8054.701	IN-EX	JETTA II (19E, 1G2, 165), 1.6 TD	JR/MF	056103419A	8.0	12.06	36.5	G	B
8054.701	IN-EX	JETTA II (19E, 1G2, 165), 1.6 TD	RA/SB	056103419A	8.0	12.06	36.5	G	B
8054.701	IN-EX	JETTA II (19E, 1G2, 165), 1.8	EV/GZ/PB	056103419A	8.0	12.06	36.5	G	B
8054.701	IN-EX	JETTA II (19E, 1G2, 165), 1.8	RD	056103419A	8.0	12.06	36.5	G	B

(D1) Internal diameter, (D2) External diameter, (B) Shape, (C) Material

VALVE GUIDES

VOLKSWAGEN

IVT Ref.	Type	Model	Engine	OEM Ref.	D1	D2	Length	B	C
8054.701	IN-EX	JETTA II (19E, 1G2, 165), 1.8	RH	056103419A	8.0	12.06	36.5	G	B
8054.701	IN-EX	JETTA II (19E, 1G2, 165), 1.8 KA	GX/RP	056103419A	8.0	12.06	36.5	G	B
8054.701	IN-EX	JETTA II (19E, 1G2, 165), 1.8 KA	PF	056103419A	8.0	12.06	36.5	G	B
8054.701	IN-EX	JETTA II (19E, 1G2, 165), 1.8 Syn	RP/GU	056103419A	8.0	12.06	36.5	G	B
8052.701	IN-EX	JETTA III (1K2), 1.9 TDI	BXE/BKC/BLS	0371034188	7.0	12.06	36.4	G	B
8170.601	IN-EX	JETTA III (1K2), 2.0 TDI	AZV/CBDA		6.0	10.06	42.0	F	B
8170.601	IN-EX	JETTA III (1K2), 2.0 TDI	BMM		6.0	10.06	42.0	F	B
8170.601	IN-EX	JETTA III (1K2), 2.0 TDI 16V	CBEA/CJAA/CBDB/BKD		6.0	10.06	42.0	F	B
8068.601	IN-EX	Jetta III 1.4 TSI	BLG		6.0	11.05	39.0	F-1	B
8068.601	IN-EX	Jetta III 1.4 TSI	BMY		6.0	11.05	39.0	F-1	B
8068.601	IN-EX	Jetta III 1.4 TSI	CAVD		6.0	11.05	39.0	F-1	B
8068.601	IN-EX	Jetta III 1.4 TSI	CAXA		6.0	11.05	39.0	F-1	B
8068.601	IN-EX	Jetta III 1.6 FSI	BLF		6.0	11.05	39.0	F-1	B
8068.601	IN-EX	Jetta IV 1.4 TSI	CAVA		6.0	11.05	39.0	F-1	B
8068.601	IN-EX	Jetta IV 1.4 TSI	CAVD		6.0	11.05	39.0	F-1	B
8054.701	IN-EX	LT 28-35 I Bus (281-363), 2.4	DL	056103419A	8.0	12.06	36.5	G	B
8054.701	IN-EX	LT 28-35 I Bus (281-363), 2.4 D	1S/ACT	056103419A	8.0	12.06	36.5	G	B
8054.701	IN-EX	LT 28-35 I Bus (281-363), 2.4 D	DW/CP	056103419A	8.0	12.06	36.5	G	B
8054.701	IN-EX	LT 28-35 I Bus (281-363), 2.4 TD	1G	056103419A	8.0	12.06	36.5	G	B
8054.701	IN-EX	LT 28-35 I Bus (281-363), 2.4 TD	ACL	056103419A	8.0	12.06	36.5	G	B
8054.701	IN-EX	LT 28-35 I Bus (281-363), 2.4 TD	DV	056103419A	8.0	12.06	36.5	G	B
8054.701	IN-EX	LT 28-35 I Kasten (281-363), 2.4	DL	056103419A	8.0	12.06	36.5	G	B
8054.701	IN-EX	LT 28-35 I Kasten (281-363), 2.4	1S/ACT	056103419A	8.0	12.06	36.5	G	B
8054.701	IN-EX	LT 28-35 I Kasten (281-363), 2.4	DW/CP	056103419A	8.0	12.06	36.5	G	B
8054.701	IN-EX	LT 28-35 I Kasten (281-363), 2.4 T	1G	056103419A	8.0	12.06	36.5	G	B
8054.701	IN-EX	LT 28-35 I Kasten (281-363), 2.4 T	ACL	056103419A	8.0	12.06	36.5	G	B
8054.701	IN-EX	LT 28-35 I Kasten (281-363), 2.4 T	DV	056103419A	8.0	12.06	36.5	G	B
8054.701	IN-EX	LT 28-35 I Pritsche/Fahrgestell (2	DL	056103419A	8.0	12.06	36.5	G	B
8054.701	IN-EX	LT 28-35 I Pritsche/Fahrgestell (2	1S/ACT	056103419A	8.0	12.06	36.5	G	B
8054.701	IN-EX	LT 28-35 I Pritsche/Fahrgestell (2	DW/CP	056103419A	8.0	12.06	36.5	G	B
8054.701	IN-EX	LT 28-35 I Pritsche/Fahrgestell (2	1S	056103419A	8.0	12.06	36.5	G	B
8054.701	IN-EX	LT 28-35 I Pritsche/Fahrgestell (2	DW	056103419A	8.0	12.06	36.5	G	B
8054.701	IN-EX	LT 28-35 I Pritsche/Fahrgestell (2	1G	056103419A	8.0	12.06	36.5	G	B
8054.701	IN-EX	LT 28-35 I Pritsche/Fahrgestell (2	ACL	056103419A	8.0	12.06	36.5	G	B
8054.701	IN-EX	LT 28-35 I Pritsche/Fahrgestell (2	DV	056103419A	8.0	12.06	36.5	G	B
8054.701	IN-EX	LT 28-35 II Bus (2DB, 2DE, 2DK),	AGX	056103419A	8.0	12.06	36.5	G	B
8054.701	IN-EX	LT 28-35 II Bus (2DB, 2DE, 2DK),	AHD	056103419A	8.0	12.06	36.5	G	B
8054.701	IN-EX	LT 28-35 II Bus (2DB, 2DE, 2DK),	APA	056103419A	8.0	12.06	36.5	G	B
8054.701	IN-EX	LT 28-35 II Bus (2DB, 2DE, 2DK),	AVR/ANJ	056103419A	8.0	12.06	36.5	G	B
8054.701	IN-EX	LT 28-35 II Bus (2DB, 2DE, 2DK),	BBE	056103419A	8.0	12.06	36.5	G	B
8054.701	IN-EX	LT 28-35 II Bus (2DB, 2DE, 2DK),	BBF	056103419A	8.0	12.06	36.5	G	B
8052.701	IN-EX	LT 28-35 II Bus (2DB, 2DE, 2DK),	AGK	0371034188	7.0	12.06	36.4	G	B
8052.701	IN-EX	LT 28-35 II Bus (2DB, 2DE, 2DK),	ATA	0371034188	7.0	12.06	36.4	G	B
8052.701	IN-EX	LT 28-35 II Bus (2DB, 2DE, 2DK),	BCQ/AUH	0371034188	7.0	12.06	36.4	G	B
8054.701	IN-EX	LT 28-46 II Kasten (2DA, 2DD, 2D	AGX	056103419A	8.0	12.06	36.5	G	B
8054.701	IN-EX	LT 28-46 II Kasten (2DA, 2DD, 2D	AHD	056103419A	8.0	12.06	36.5	G	B
8054.701	IN-EX	LT 28-46 II Kasten (2DA, 2DD, 2D	APA	056103419A	8.0	12.06	36.5	G	B
8054.701	IN-EX	LT 28-46 II Kasten (2DA, 2DD, 2D	AVR/ANJ	056103419A	8.0	12.06	36.5	G	B
8054.701	IN-EX	LT 28-46 II Kasten (2DA, 2DD, 2D	BBE	056103419A	8.0	12.06	36.5	G	B
8054.701	IN-EX	LT 28-46 II Kasten (2DA, 2DD, 2D	BBF	056103419A	8.0	12.06	36.5	G	B
8052.701	IN-EX	LT 28-46 II Kasten (2DA, 2DD, 2D	AGK	0371034188	7.0	12.06	36.4	G	B
8052.701	IN-EX	LT 28-46 II Kasten (2DA, 2DD, 2D	ATA	0371034188	7.0	12.06	36.4	G	B
8052.701	IN-EX	LT 28-46 II Kasten (2DA, 2DD, 2D	BCQ/AUH	0371034188	7.0	12.06	36.4	G	B
8054.701	IN-EX	LT 28-46 II Pritsche/Fahrgestell (2	AGX	056103419A	8.0	12.06	36.5	G	B
8054.701	IN-EX	LT 28-46 II Pritsche/Fahrgestell (2	AHD	056103419A	8.0	12.06	36.5	G	B
8054.701	IN-EX	LT 28-46 II Pritsche/Fahrgestell (2	APA	056103419A	8.0	12.06	36.5	G	B
8054.701	IN-EX	LT 28-46 II Pritsche/Fahrgestell (2	AVR/ANJ	056103419A	8.0	12.06	36.5	G	B
8054.701	IN-EX	LT 28-46 II Pritsche/Fahrgestell (2	BBE	056103419A	8.0	12.06	36.5	G	B
8054.701	IN-EX	LT 28-46 II Pritsche/Fahrgestell (2	BBF	056103419A	8.0	12.06	36.5	G	B
8052.701	IN-EX	LT 28-46 II Pritsche/Fahrgestell (2	AGK	0371034188	7.0	12.06	36.4	G	B
8052.701	IN-EX	LT 28-46 II Pritsche/Fahrgestell (2	ATA	0371034188	7.0	12.06	36.4	G	B
8052.701	IN-EX	LT 28-46 II Pritsche/Fahrgestell (2	BCQ/AUH	0371034188	7.0	12.06	36.4	G	B

(D1) Internal diameter, (D2) External diameter, (B) Shape, (C) Material

VALVE GUIDES

VOLKSWAGEN

IVT Ref.	Type	Model	Engine	OEM Ref.	D1	D2	Length	B	C
8054.701	IN-EX	LT 40-55 I Kasten (291-512), 2.4	DL	056103419A	8.0	12.06	36.5	G	B
8054.701	IN-EX	LT 40-55 I Kasten (291-512), 2.4 4	DL	056103419A	8.0	12.06	36.5	G	B
8054.701	IN-EX	LT 40-55 I Kasten (291-512), 2.4	1S/ACT	056103419A	8.0	12.06	36.5	G	B
8054.701	IN-EX	LT 40-55 I Kasten (291-512), 2.4	DW/CP	056103419A	8.0	12.06	36.5	G	B
8054.701	IN-EX	LT 40-55 I Kasten (291-512), 2.4	DW	056103419A	8.0	12.06	36.5	G	B
8054.701	IN-EX	LT 40-55 I Kasten (291-512), 2.4 T	1G	056103419A	8.0	12.06	36.5	G	B
8054.701	IN-EX	LT 40-55 I Kasten (291-512), 2.4 T	ACL	056103419A	8.0	12.06	36.5	G	B
8054.701	IN-EX	LT 40-55 I Kasten (291-512), 2.4 T	DV	056103419A	8.0	12.06	36.5	G	B
8054.701	IN-EX	LT 40-55 I Kasten (291-512), 2.4 T	DV	056103419A	8.0	12.06	36.5	G	B
8054.701	IN-EX	LT 40-55 I Pritsche/Fahrgestell (2	DL	056103419A	8.0	12.06	36.5	G	B
8054.701	IN-EX	LT 40-55 I Pritsche/Fahrgestell (2	1S/ACT	056103419A	8.0	12.06	36.5	G	B
8054.701	IN-EX	LT 40-55 I Pritsche/Fahrgestell (2	DW/CP	056103419A	8.0	12.06	36.5	G	B
8054.701	IN-EX	LT 40-55 I Pritsche/Fahrgestell (2	DL	056103419A	8.0	12.06	36.5	G	B
8054.701	IN-EX	LT 40-55 I Pritsche/Fahrgestell (2	1G	056103419A	8.0	12.06	36.5	G	B
8054.701	IN-EX	LT 40-55 I Pritsche/Fahrgestell (2	ACL	056103419A	8.0	12.06	36.5	G	B
8054.701	IN-EX	LT 40-55 I Pritsche/Fahrgestell (2	DV	056103419A	8.0	12.06	36.5	G	B
8052.701	IN-EX	LUPO (6X1, 6E1), 1.2 TDI 3L	AYZ/ANY	0371034188	7.0	12.06	36.4	G	B
8052.701	IN-EX	LUPO (6X1, 6E1), 1.4 TDI	AMF	0371034188	7.0	12.06	36.4	G	B
8052.701	IN-EX	LUPO (6X1, 6E1), 1.7 SDI	AKU	0371034188	7.0	12.06	36.4	G	B
8068.601	IN-EX	Lupo 1.4 16V	AFK		6.0	11.05	39.0	F-1	B
8068.601	IN-EX	Lupo 1.4 16V	AHW		6.0	11.05	39.0	F-1	B
8068.601	IN-EX	Lupo 1.4 16V	AKQ		6.0	11.05	39.0	F-1	B
8068.601	IN-EX	Lupo 1.4 16V	APE		6.0	11.05	39.0	F-1	B
8068.601	IN-EX	Lupo 1.4 16V	AQQ		6.0	11.05	39.0	F-1	B
8068.601	IN-EX	Lupo 1.4 16V	AUA		6.0	11.05	39.0	F-1	B
8068.601	IN-EX	Lupo 1.4 16V	AUB		6.0	11.05	39.0	F-1	B
8068.601	IN-EX	Lupo 1.4 16V	BBY		6.0	11.05	39.0	F-1	B
8068.601	IN-EX	Lupo 1.4 FSI	ARR		6.0	11.05	39.0	F-1	B
8068.601	IN-EX	Lupo 1.6 GTI	AVY		6.0	11.05	39.0	F-1	B
8068.601	IN-EX	Lupo 1.6 GTI	BCA		6.0	11.05	39.0	F-1	B
8052.701	IN-EX	MULTIVAN V (7HM, 7HN, 7HF, 7	AXB	0371034188	7.0	12.06	36.4	G	B
8052.701	IN-EX	MULTIVAN V (7HM, 7HN, 7HF, 7	AXA	0371034188	7.0	12.06	36.4	G	B
8052.701	IN-EX	MULTIVAN V (7HM, 7HN, 7HF, 7	AXD/BNZ	0371034188	7.0	12.06	36.4	G	B
8052.701	IN-EX	MULTIVAN V (7HM, 7HN, 7HF, 7	AXE/BPC	0371034188	7.0	12.06	36.4	G	B
8052.701	IN-EX	MULTIVAN V (7HM, 7HN, 7HF, 7	AXD/BNZ	0371034188	7.0	12.06	36.4	G	B
8052.701	IN-EX	MULTIVAN V (7HM, 7HN, 7HF, 7	AXE/BPC	0371034188	7.0	12.06	36.4	G	B
8052.701	IN-EX	NEW BEETLE (9C1, 1C1), 1.6	AWH	0371034188	7.0	12.06	36.4	G	B
8037.601	IN-EX	NEW BEETLE (9C1, 1C1), 1.6	AYD/BFS		6.0	12.06	36.4	F	B
8052.701	IN-EX	NEW BEETLE (9C1, 1C1), 1.9 TD	ALH	0371034188	7.0	12.06	36.4	G	B
8171.601	IN-EX	NEW BEETLE (9C1, 1C1), 1.9 TD	BEW/ATD		7.0	12.06	31.5	F	B
8052.701	IN-EX	NEW BEETLE (9C1, 1C1), 2.0	APK/AZJ/AVH/AQY/AEG/BE	0371034188	7.0	12.06	36.4	G	B
8068.601	IN-EX	New Beetle 1.4	BCA		6.0	11.05	39.0	F-1	B
8171.601	IN-EX	NEW BEETLE Cabriolet (1Y7), 1.	AXR		7.0	12.06	31.5	F	B
8052.701	IN-EX	NEW BEETLE Cabriolet (1Y7), 2.	AZJ/BEV/BDC/BGD	0371034188	7.0	12.06	36.4	G	B
8068.601	IN-EX	New Beetle Cabriolet 1.4	BCA		6.0	11.05	39.0	F-1	B
8054.701	IN-EX	PASSAT (32), 1.3	FY	056103419A	8.0	12.06	36.5	G	B
8054.701	IN-EX	PASSAT (32), 1.3	FZ	056103419A	8.0	12.06	36.5	G	B
8054.701	IN-EX	PASSAT (32), 1.3	ZF	056103419A	8.0	12.06	36.5	G	B
8054.701	IN-EX	PASSAT (32), 1.5	ZB/YJ	056103419A	8.0	12.06	36.5	G	B
8054.701	IN-EX	PASSAT (32), 1.5	ZC	056103419A	8.0	12.06	36.5	G	B
8054.701	IN-EX	PASSAT (32), 1.5 D	CK	056103419A	8.0	12.06	36.5	G	B
8054.701	IN-EX	PASSAT (32), 1.6	YP	056103419A	8.0	12.06	36.5	G	B
8054.701	IN-EX	PASSAT (32), 1.6 GLi	YS	056103419A	8.0	12.06	36.5	G	B
8054.701	IN-EX	PASSAT (32B), 1.3	EP/EU	056103419A	8.0	12.06	36.5	G	B
8054.701	IN-EX	PASSAT (32B), 1.3	FY	056103419A	8.0	12.06	36.5	G	B
8054.701	IN-EX	PASSAT (32B), 1.3	FZ	056103419A	8.0	12.06	36.5	G	B
8054.701	IN-EX	PASSAT (32B), 1.6	DT	056103419A	8.0	12.06	36.5	G	B
8054.701	IN-EX	PASSAT (32B), 1.6	PP	056103419A	8.0	12.06	36.5	G	B
8054.701	IN-EX	PASSAT (32B), 1.6	RL	056103419A	8.0	12.06	36.5	G	B
8054.701	IN-EX	PASSAT (32B), 1.6	WV/YN	056103419A	8.0	12.06	36.5	G	B
8054.701	IN-EX	PASSAT (32B), 1.6	YP	056103419A	8.0	12.06	36.5	G	B
8054.701	IN-EX	PASSAT (32B), 1.6 D	JK/CR	056103419A	8.0	12.06	36.5	G	B

(D1) Internal diameter, (D2) External diameter, (B) Shape, (C) Material

VALVE GUIDES

VOLKSWAGEN

IVT Ref.	Type	Model	Engine	OEM Ref.	D1	D2	Length	B	C
8054.701	IN-EX	PASSAT (32B), 1.6 TD	CY	056103419A	8.0	12.06	36.5	G	B
8054.701	IN-EX	PASSAT (32B), 1.6 TD	RA	056103419A	8.0	12.06	36.5	G	B
8054.701	IN-EX	PASSAT (32B), 1.8	RM	056103419A	8.0	12.06	36.5	G	B
8054.701	IN-EX	PASSAT (32B), 1.9	WN	056103419A	8.0	12.06	36.5	G	B
8054.701	IN-EX	PASSAT (32B), 2.0	JS/HP	056103419A	8.0	12.06	36.5	G	B
8054.701	IN-EX	PASSAT (32B), 2.2	KV	056103419A	8.0	12.06	36.5	G	B
8054.701	IN-EX	PASSAT (32B), 2.2	KX	056103419A	8.0	12.06	36.5	G	B
8054.701	IN-EX	PASSAT (3A2, 35I), 1.6	ABN/EZ	056103419A	8.0	12.06	36.5	G	B
8052.701	IN-EX	PASSAT (3A2, 35I), 1.6	AEK/AFT	0371034188	7.0	12.06	36.4	G	B
8054.701	IN-EX	PASSAT (3A2, 35I), 1.6	EZ /1F	056103419A	8.0	12.06	36.5	G	B
8054.701	IN-EX	PASSAT (3A2, 35I), 1.6 TD	RA/SB	056103419A	8.0	12.06	36.5	G	B
8054.701	IN-EX	PASSAT (3A2, 35I), 1.8	AAM	056103419A	8.0	12.06	36.5	G	B
8054.701	IN-EX	PASSAT (3A2, 35I), 1.8	PB	056103419A	8.0	12.06	36.5	G	B
8054.701	IN-EX	PASSAT (3A2, 35I), 1.8	PF	056103419A	8.0	12.06	36.5	G	B
8054.701	IN-EX	PASSAT (3A2, 35I), 1.8	RP/ADZ/ABS	056103419A	8.0	12.06	36.5	G	B
8054.701	IN-EX	PASSAT (3A2, 35I), 1.8 G60 Sync	PG	056103419A	8.0	12.06	36.5	G	B
8052.701	IN-EX	PASSAT (3A2, 35I), 1.9 D	1Y	0371034188	7.0	12.06	36.4	G	B
8054.701	IN-EX	PASSAT (3A2, 35I), 1.9 D	1Y	056103419A	8.0	12.06	36.5	G	B
8052.701	IN-EX	PASSAT (3A2, 35I), 1.9 TD	AAZ	0371034188	7.0	12.06	36.4	G	B
8054.701	IN-EX	PASSAT (3A2, 35I), 1.9 TD	AAZ	056103419A	8.0	12.06	36.5	G	B
8052.701	IN-EX	PASSAT (3A2, 35I), 1.9 TDI	1Z/AHU	0371034188	7.0	12.06	36.4	G	B
8054.701	IN-EX	PASSAT (3A2, 35I), 1.9 TDI	1Z/AHU	056103419A	8.0	12.06	36.5	G	B
8052.701	IN-EX	PASSAT (3A2, 35I), 1.9 TDI	AFN	0371034188	7.0	12.06	36.4	G	B
8052.701	IN-EX	PASSAT (3A2, 35I), 2.0	ABA/ADY/2E/AGG	0371034188	7.0	12.06	36.4	G	B
8054.701	IN-EX	PASSAT (3A2, 35I), 2.0	ABA/ADY/2E/AGG	056103419A	8.0	12.06	36.5	G	B
8054.701	IN-EX	PASSAT (3A2, 35I), 2.0	AEP	056103419A	8.0	12.06	36.5	G	B
8052.701	IN-EX	PASSAT (3A2, 35I), 2.0 16V	ABF	0371034188	7.0	12.06	36.4	G	B
8052.701	IN-EX	PASSAT (3A2, 35I), 2.0 Syncro	ADY/2E/AGG	0371034188	7.0	12.06	36.4	G	B
8054.701	IN-EX	PASSAT (3A2, 35I), 2.0 Syncro	ADY/2E/AGG	056103419A	8.0	12.06	36.5	G	B
8052.701	IN-EX	PASSAT (3B2), 1.6	AHL/ADP/ARM/ANA	0371034188	7.0	12.06	36.4	G	B
8052.701	IN-EX	PASSAT (3B2), 1.9 TDI	AHU/AHH	0371034188	7.0	12.06	36.4	G	B
8171.601	IN-EX	PASSAT (3B2), 1.9 TDI	ATJ/AJM		7.0	12.06	31.5	F	B
8052.701	IN-EX	PASSAT (3B2), 1.9 TDI	AVB	0371034188	7.0	12.06	36.4	G	B
8052.701	IN-EX	PASSAT (3B2), 1.9 TDI	AVG/AFN	0371034188	7.0	12.06	36.4	G	B
8171.601	IN-EX	PASSAT (3B2), 1.9 TDI 4motion	ATJ		7.0	12.06	31.5	F	B
8052.701	IN-EX	PASSAT (3B2), 1.9 TDI Syncro/4	AVG/AFN	0371034188	7.0	12.06	36.4	G	B
8170.601	IN-EX	PASSAT (3B2), 2.5 TDI	AKN/AFB		6.0	10.06	42.0	F	B
8170.601	IN-EX	PASSAT (3B2), 2.5 TDI Syncro/4	AKN/AFB		6.0	10.06	42.0	F	B
8170.601	IN-EX	PASSAT (3B2), 2.8 V6	APR/ACK/AHA/AQD		6.0	10.06	42.0	F	B
8170.601	IN-EX	PASSAT (3B2), 2.8 V6 Syncro/4m	APR/ACK/ALG/AHA/AQD		6.0	10.06	42.0	F	B
8037.601	IN-EX	PASSAT (3B3), 1.6	ALZ		6.0	12.06	36.4	F	B
8052.701	IN-EX	PASSAT (3B3), 1.9 TDI	AVB	0371034188	7.0	12.06	36.4	G	B
8052.701	IN-EX	PASSAT (3B3), 1.9 TDI	AWX/AVF	0371034188	7.0	12.06	36.4	G	B
8052.701	IN-EX	PASSAT (3B3), 1.9 TDI 4motion	AVF	0371034188	7.0	12.06	36.4	G	B
8052.701	IN-EX	PASSAT (3B3), 2.0	AZM/BFF	0371034188	7.0	12.06	36.4	G	B
8052.701	IN-EX	PASSAT (3B3), 2.0 4motion	AZM	0371034188	7.0	12.06	36.4	G	B
8170.601	IN-EX	PASSAT (3B3), 2.5 TDI	AKN/AFB		6.0	10.06	42.0	F	B
8128.601	IN-EX	PASSAT (3B3), 2.5 TDI	BDG		6.0	10.06	36.0	F	B
8170.601	IN-EX	PASSAT (3B3), 2.5 TDI 4motion	AKN/AFB		6.0	10.06	42.0	F	B
8128.601	IN-EX	PASSAT (3B3), 2.5 TDI 4motion	BAU/BDH		6.0	10.06	36.0	F	B
8128.601	IN-EX	PASSAT (3B3), 4.0 W8 4motion	BDP/BDN		6.0	10.06	36.0	F	B
8052.701	IN-EX	PASSAT (3C2), 1.9 TDI	BXE/BKC/BLS	0371034188	7.0	12.06	36.4	G	B
8170.601	IN-EX	PASSAT (3C2), 2.0 TDI	BMP		6.0	10.06	42.0	F	B
8170.601	IN-EX	PASSAT (3C2), 2.0 TDI	CBAA/BMA		6.0	10.06	42.0	F	B
8170.601	IN-EX	PASSAT (3C2), 2.0 TDI	CBBB/BMR		6.0	10.06	42.0	F	B
8170.601	IN-EX	PASSAT (3C2), 2.0 TDI 16V	BKP/CBAB		6.0	10.06	42.0	F	B
8170.601	IN-EX	PASSAT (3C2), 2.0 TDI 16V 4moti	BKP/CBAB		6.0	10.06	42.0	F	B
8170.601	IN-EX	PASSAT (3C2), 2.0 TDI 4motion	BMP		6.0	10.06	42.0	F	B
8170.601	IN-EX	PASSAT (3C2), 2.0 TDI 4motion	CBBB		6.0	10.06	42.0	F	B
8170.601	IN-EX	PASSAT (3G2), 2.0 TDI	CRLB/DFGA		6.0	10.06	42.0	F	B
8170.601	IN-EX	PASSAT (3G2), 2.0 TDI 4motion	CRLB/DFEA		6.0	10.06	42.0	F	B
8068.601	IN-EX	Passat 1.4 TSI	CAXA		6.0	11.05	39.0	F-1	B

(D1) Internal diameter, (D2) External diameter, (B) Shape, (C) Material

VALVE GUIDES

VOLKSWAGEN

IVT Ref.	Type	Model	Engine	OEM Ref.	D1	D2	Length	B	C
8068.601	IN-EX	Passat 1.6 FSI	BLF		6.0	11.05	39.0	F-1	B
8071.701	IN-EX	PASSAT C / CL / GL	DT	049103419	8.0	12.06	42.3	G	B
8071.701	IN-EX	PASSAT CL	DS	049103419	8.0	12.06	42.3	G	B
8071.701	IN-EX	PASSAT CL5 / GL5 / Variant	WN	049103419	8.0	12.06	42.3	G	B
8078.601	IN-EX	PASSAT GT 16V	9A	027103415	7.0	12.06	38.0	F	B
8064.701	IN-EX	PASSAT GT 16V	9A	027103419	7.0	12.06	38.0	G	B
8078.601	IN-EX	PASSAT GT 16V	PL / PR	027103415	7.0	12.06	38.0	F	B
8064.701	IN-EX	PASSAT GT 16V	PL / PR	027103419	7.0	12.06	38.0	G	B
8054.701	IN-EX	PASSAT Stufenheck (32B), 1.6	DT	056103419A	8.0	12.06	36.5	G	B
8054.701	IN-EX	PASSAT Stufenheck (32B), 1.6	PP	056103419A	8.0	12.06	36.5	G	B
8054.701	IN-EX	PASSAT Stufenheck (32B), 1.6	RL	056103419A	8.0	12.06	36.5	G	B
8054.701	IN-EX	PASSAT Stufenheck (32B), 1.6 T	CY	056103419A	8.0	12.06	36.5	G	B
8054.701	IN-EX	PASSAT Stufenheck (32B), 1.8	RM	056103419A	8.0	12.06	36.5	G	B
8054.701	IN-EX	PASSAT Stufenheck (32B), 2.0	JS/HP	056103419A	8.0	12.06	36.5	G	B
8054.701	IN-EX	PASSAT Stufenheck (32B), 2.2	KX	056103419A	8.0	12.06	36.5	G	B
8054.701	IN-EX	PASSAT Variant (32B), 1.3	EP/EU	056103419A	8.0	12.06	36.5	G	B
8054.701	IN-EX	PASSAT Variant (32B), 1.3	FY	056103419A	8.0	12.06	36.5	G	B
8054.701	IN-EX	PASSAT Variant (32B), 1.3	FZ	056103419A	8.0	12.06	36.5	G	B
8054.701	IN-EX	PASSAT Variant (32B), 1.6	DT	056103419A	8.0	12.06	36.5	G	B
8054.701	IN-EX	PASSAT Variant (32B), 1.6	PP	056103419A	8.0	12.06	36.5	G	B
8054.701	IN-EX	PASSAT Variant (32B), 1.6	RL	056103419A	8.0	12.06	36.5	G	B
8054.701	IN-EX	PASSAT Variant (32B), 1.6	WV/YN	056103419A	8.0	12.06	36.5	G	B
8054.701	IN-EX	PASSAT Variant (32B), 1.6	YP	056103419A	8.0	12.06	36.5	G	B
8054.701	IN-EX	PASSAT Variant (32B), 1.6 D	JK/CR	056103419A	8.0	12.06	36.5	G	B
8054.701	IN-EX	PASSAT Variant (32B), 1.6 TD	CY	056103419A	8.0	12.06	36.5	G	B
8054.701	IN-EX	PASSAT Variant (32B), 1.8	RM	056103419A	8.0	12.06	36.5	G	B
8054.701	IN-EX	PASSAT Variant (32B), 1.9	WN	056103419A	8.0	12.06	36.5	G	B
8054.701	IN-EX	PASSAT Variant (32B), 2.0	JS/HP	056103419A	8.0	12.06	36.5	G	B
8054.701	IN-EX	PASSAT Variant (32B), 2.0 Syncr	JS	056103419A	8.0	12.06	36.5	G	B
8054.701	IN-EX	PASSAT Variant (32B), 2.2	KV	056103419A	8.0	12.06	36.5	G	B
8054.701	IN-EX	PASSAT Variant (32B), 2.2	KX	056103419A	8.0	12.06	36.5	G	B
8054.701	IN-EX	PASSAT Variant (32B), 2.2 Syncr	HY	056103419A	8.0	12.06	36.5	G	B
8054.701	IN-EX	PASSAT Variant (32B), 2.2 Syncr	JT	056103419A	8.0	12.06	36.5	G	B
8054.701	IN-EX	PASSAT Variant (33), 1.3	ZF	056103419A	8.0	12.06	36.5	G	B
8054.701	IN-EX	PASSAT Variant (33), 1.5	ZB/YJ	056103419A	8.0	12.06	36.5	G	B
8054.701	IN-EX	PASSAT Variant (33), 1.5	ZC	056103419A	8.0	12.06	36.5	G	B
8054.701	IN-EX	PASSAT Variant (33), 1.5 D	CK	056103419A	8.0	12.06	36.5	G	B
8054.701	IN-EX	PASSAT Variant (33), 1.6	YN	056103419A	8.0	12.06	36.5	G	B
8054.701	IN-EX	PASSAT Variant (33), 1.6	YP	056103419A	8.0	12.06	36.5	G	B
8054.701	IN-EX	PASSAT Variant (33), 1.6 D	CR	056103419A	8.0	12.06	36.5	G	B
8054.701	IN-EX	PASSAT Variant (33), 1.6 i	YS	056103419A	8.0	12.06	36.5	G	B
8052.701	IN-EX	PASSAT Variant (3A5, 35I), 1.6	AEK/AFT	0371034188	7.0	12.06	36.4	G	B
8054.701	IN-EX	PASSAT Variant (3A5, 35I), 1.6	EZ	056103419A	8.0	12.06	36.5	G	B
8054.701	IN-EX	PASSAT Variant (3A5, 35I), 1.6	EZ /1F	056103419A	8.0	12.06	36.5	G	B
8054.701	IN-EX	PASSAT Variant (3A5, 35I), 1.6 T	RA/SB	056103419A	8.0	12.06	36.5	G	B
8054.701	IN-EX	PASSAT Variant (3A5, 35I), 1.8	AAM	056103419A	8.0	12.06	36.5	G	B
8054.701	IN-EX	PASSAT Variant (3A5, 35I), 1.8	PB	056103419A	8.0	12.06	36.5	G	B
8054.701	IN-EX	PASSAT Variant (3A5, 35I), 1.8	PF	056103419A	8.0	12.06	36.5	G	B
8054.701	IN-EX	PASSAT Variant (3A5, 35I), 1.8	RP/ADZ/ABS	056103419A	8.0	12.06	36.5	G	B
8054.701	IN-EX	PASSAT Variant (3A5, 35I), 1.8 G	PG	056103419A	8.0	12.06	36.5	G	B
8052.701	IN-EX	PASSAT Variant (3A5, 35I), 1.9 D	1Y	0371034188	7.0	12.06	36.4	G	B
8054.701	IN-EX	PASSAT Variant (3A5, 35I), 1.9 D	1Y	056103419A	8.0	12.06	36.5	G	B
8052.701	IN-EX	PASSAT Variant (3A5, 35I), 1.9 T	AAZ	0371034188	7.0	12.06	36.4	G	B
8054.701	IN-EX	PASSAT Variant (3A5, 35I), 1.9 T	AAZ	056103419A	8.0	12.06	36.5	G	B
8052.701	IN-EX	PASSAT Variant (3A5, 35I), 1.9 T	1Z/AHU	0371034188	7.0	12.06	36.4	G	B
8054.701	IN-EX	PASSAT Variant (3A5, 35I), 1.9 T	1Z/AHU	056103419A	8.0	12.06	36.5	G	B
8052.701	IN-EX	PASSAT Variant (3A5, 35I), 1.9 T	AFN	0371034188	7.0	12.06	36.4	G	B
8052.701	IN-EX	PASSAT Variant (3A5, 35I), 2.0	ADY/2E/AGG	0371034188	7.0	12.06	36.4	G	B
8054.701	IN-EX	PASSAT Variant (3A5, 35I), 2.0	ADY/2E/AGG	056103419A	8.0	12.06	36.5	G	B
8054.701	IN-EX	PASSAT Variant (3A5, 35I), 2.0	AEP	056103419A	8.0	12.06	36.5	G	B
8052.701	IN-EX	PASSAT Variant (3A5, 35I), 2.0 1	ABF	0371034188	7.0	12.06	36.4	G	B
8052.701	IN-EX	PASSAT Variant (3A5, 35I), 2.0 S	ADY/2E/AGG	0371034188	7.0	12.06	36.4	G	B

(D1) Internal diameter, (D2) External diameter, (B) Shape, (C) Material

VALVE GUIDES

VOLKSWAGEN

IVT Ref.	Type	Model	Engine	OEM Ref.	D1	D2	Length	B	C
8054.701	IN-EX	PASSAT Variant (3A5, 35I), 2.0 S	ADY/2E/AGG	056103419A	8.0	12.06	36.5	G	B
8052.701	IN-EX	PASSAT Variant (3B5), 1.6	AHL/ADP/ARM/ANA	0371034188	7.0	12.06	36.4	G	B
8052.701	IN-EX	PASSAT Variant (3B5), 1.9 TDI	AHU/AHH	0371034188	7.0	12.06	36.4	G	B
8171.601	IN-EX	PASSAT Variant (3B5), 1.9 TDI	ATJ/AJM		7.0	12.06	31.5	F	B
8052.701	IN-EX	PASSAT Variant (3B5), 1.9 TDI	AVB	0371034188	7.0	12.06	36.4	G	B
8052.701	IN-EX	PASSAT Variant (3B5), 1.9 TDI	AVG/AFN	0371034188	7.0	12.06	36.4	G	B
8171.601	IN-EX	PASSAT Variant (3B5), 1.9 TDI 4	ATJ		7.0	12.06	31.5	F	B
8052.701	IN-EX	PASSAT Variant (3B5), 1.9 TDI S	AVG/AFN	0371034188	7.0	12.06	36.4	G	B
8170.601	IN-EX	PASSAT Variant (3B5), 2.5 TDI	AKN/AFB		6.0	10.06	42.0	F	B
8170.601	IN-EX	PASSAT Variant (3B5), 2.5 TDI S	AKN/AFB		6.0	10.06	42.0	F	B
8170.601	IN-EX	PASSAT Variant (3B5), 2.8 V6	APR/ACK/AHA/AQD		6.0	10.06	42.0	F	B
8170.601	IN-EX	PASSAT Variant (3B5), 2.8 V6 Sy	APR/ACK/ALG/AHA/AQD		6.0	10.06	42.0	F	B
8037.601	IN-EX	PASSAT Variant (3B6), 1.6	ALZ		6.0	12.06	36.4	F	B
8052.701	IN-EX	PASSAT Variant (3B6), 1.9 TDI	AVB	0371034188	7.0	12.06	36.4	G	B
8052.701	IN-EX	PASSAT Variant (3B6), 1.9 TDI	AWX/AVF	0371034188	7.0	12.06	36.4	G	B
8052.701	IN-EX	PASSAT Variant (3B6), 1.9 TDI 4	AVF	0371034188	7.0	12.06	36.4	G	B
8052.701	IN-EX	PASSAT Variant (3B6), 2.0	AZM	0371034188	7.0	12.06	36.4	G	B
8052.701	IN-EX	PASSAT Variant (3B6), 2.0 4motio	AZM	0371034188	7.0	12.06	36.4	G	B
8170.601	IN-EX	PASSAT Variant (3B6), 2.5 TDI	AKN/AFB		6.0	10.06	42.0	F	B
8128.601	IN-EX	PASSAT Variant (3B6), 2.5 TDI	BDG		6.0	10.06	36.0	F	B
8170.601	IN-EX	PASSAT Variant (3B6), 2.5 TDI 4	AKN/AFB		6.0	10.06	42.0	F	B
8128.601	IN-EX	PASSAT Variant (3B6), 2.5 TDI 4	BAU/BDH		6.0	10.06	36.0	F	B
8128.601	IN-EX	PASSAT Variant (3B6), 4.0 W8 4	BDP/BDN		6.0	10.06	36.0	F	B
8052.701	IN-EX	PASSAT Variant (3C5), 1.9 TDI	BXE/BKC/BLS	0371034188	7.0	12.06	36.4	G	B
8170.601	IN-EX	PASSAT Variant (3C5), 2.0 TDI	BMP		6.0	10.06	42.0	F	B
8170.601	IN-EX	PASSAT Variant (3C5), 2.0 TDI	BVE		6.0	10.06	42.0	F	B
8170.601	IN-EX	PASSAT Variant (3C5), 2.0 TDI	CBAA/BMA		6.0	10.06	42.0	F	B
8170.601	IN-EX	PASSAT Variant (3C5), 2.0 TDI	CBBB/BMR		6.0	10.06	42.0	F	B
8170.601	IN-EX	PASSAT Variant (3C5), 2.0 TDI 1	BKP/CBAB		6.0	10.06	42.0	F	B
8170.601	IN-EX	PASSAT Variant (3C5), 2.0 TDI 1	BKP/CBAB		6.0	10.06	42.0	F	B
8170.601	IN-EX	PASSAT Variant (3C5), 2.0 TDI 4	BMP		6.0	10.06	42.0	F	B
8170.601	IN-EX	PASSAT Variant (3C5), 2.0 TDI 4	CBBB		6.0	10.06	42.0	F	B
8170.601	IN-EX	PASSAT Variant (3G5), 2.0 TDI	CRLB/DFGA		6.0	10.06	42.0	F	B
8170.601	IN-EX	PASSAT Variant (3G5), 2.0 TDI 4	CRLB/DFEA		6.0	10.06	42.0	F	B
8068.601	IN-EX	Passat Variant 1.4 TSI	CAXA		6.0	11.05	39.0	F-1	B
8068.601	IN-EX	Passat Variant 1.6 FSI	BLF		6.0	11.05	39.0	F-1	B
8128.601	IN-EX	PHAETON (3D_), 3.0 V6 TDI 4mo	BMK		6.0	10.06	36.0	F	B
8128.601	IN-EX	PHAETON (3D_), 3.0 V6 TDI 4mo	CARA		6.0	10.06	36.0	F	B
8128.601	IN-EX	PHAETON (3D_), 3.0 V6 TDI 4mo	CARB/CEXA		6.0	10.06	36.0	F	B
8052.701	IN-EX	PHAETON (3D_), 5.0 V10 TDI 4m	AJS	0371034188	7.0	12.06	36.4	G	B
8052.701	IN-EX	POLO (6N1), 1.7 SDI	AHG	0371034188	7.0	12.06	36.4	G	B
8052.701	IN-EX	POLO (6N1), 60 1.7 SDI	AKU	0371034188	7.0	12.06	36.4	G	B
8052.701	IN-EX	POLO (6N1), 64 1.9 D	AEF	0371034188	7.0	12.06	36.4	G	B
8054.701	IN-EX	POLO (6N1), 64 1.9 D	AEF	056103419A	8.0	12.06	36.5	G	B
8054.701	IN-EX	POLO (6N1), 64 1.9 SDI	AGD	056103419A	8.0	12.06	36.5	G	B
8052.701	IN-EX	POLO (6N2), 1.4 TDI	AMF	0371034188	7.0	12.06	36.4	G	B
8052.701	IN-EX	POLO (6N2), 1.7 SDI	AKU	0371034188	7.0	12.06	36.4	G	B
8052.701	IN-EX	POLO (6N2), 1.9 D	AEF	0371034188	7.0	12.06	36.4	G	B
8054.701	IN-EX	POLO (6N2), 1.9 D	AEF	056103419A	8.0	12.06	36.5	G	B
8052.701	IN-EX	POLO (6N2), 1.9 SDI	ASX/AGD	0371034188	7.0	12.06	36.4	G	B
8054.701	IN-EX	POLO (6N2), 1.9 SDI	ASX/AGD	056103419A	8.0	12.06	36.5	G	B
8054.701	IN-EX	POLO (86), 0.9	HA	056103419A	8.0	12.06	36.5	G	B
8054.701	IN-EX	POLO (86), 1.1	HB	056103419A	8.0	12.06	36.5	G	B
8054.701	IN-EX	POLO (86), 1.1	HC	056103419A	8.0	12.06	36.5	G	B
8054.701	IN-EX	POLO (86), 1.3	HH	056103419A	8.0	12.06	36.5	G	B
8054.701	IN-EX	POLO (86C, 80), 0.9	HA	056103419A	8.0	12.06	36.5	G	B
8054.701	IN-EX	POLO (86C, 80), 1.0	HZ	056103419A	8.0	12.06	36.5	G	B
8054.701	IN-EX	POLO (86C, 80), 1.0 KAT	AAU/AAK/ACM	056103419A	8.0	12.06	36.5	G	B
8054.701	IN-EX	POLO (86C, 80), 1.1	HB	056103419A	8.0	12.06	36.5	G	B
8054.701	IN-EX	POLO (86C, 80), 1.3	HH	056103419A	8.0	12.06	36.5	G	B
8054.701	IN-EX	POLO (86C, 80), 1.3 D	MN	056103419A	8.0	12.06	36.5	G	B
8054.701	IN-EX	POLO (86C, 80), 1.4 D	1W	056103419A	8.0	12.06	36.5	G	B

(D1) Internal diameter, (D2) External diameter, (B) Shape, (C) Material

VALVE GUIDES

VOLKSWAGEN

IVT Ref.	Type	Model	Engine	OEM Ref.	D1	D2	Length	B	C
8052.701	IN-EX	POLO (9N_), 1.4 TDI	AMF/BAY	0371034188	7.0	12.06	36.4	G	B
8052.701	IN-EX	POLO (9N_), 1.9 SDI	ASY	0371034188	7.0	12.06	36.4	G	B
8052.701	IN-EX	POLO (9N_), 1.9 TDI	BLT/ASZ	0371034188	7.0	12.06	36.4	G	B
8171.601	IN-EX	POLO (9N_), 1.9 TDI	BMT/AXR/ATD		7.0	12.06	31.5	F	B
8068.601	IN-EX	Polo 1.2	CGPA		6.0	11.05	39.0	F-1	B
8068.601	IN-EX	Polo 1.2	CGPB		6.0	11.05	39.0	F-1	B
8068.601	IN-EX	Polo 1.2 12V	AZQ		6.0	11.05	39.0	F-1	B
8068.601	IN-EX	Polo 1.2 12V	BME		6.0	11.05	39.0	F-1	B
8068.601	IN-EX	Polo 1.2 12V	BZG		6.0	11.05	39.0	F-1	B
8062.701	IN-EX	POLO 1.4	AEX	032103419A	7.0	11.07	33.0	G	B
8062.701	IN-EX	POLO 1.4	AKV	032103419A	7.0	11.07	33.0	G	B
8068.601	IN-EX	Polo 1.4	CGGB		6.0	11.05	39.0	F-1	B
8068.601	IN-EX	Polo 1.4 16V	AFK		6.0	11.05	39.0	F-1	B
8068.601	IN-EX	Polo 1.4 16V	AHW		6.0	11.05	39.0	F-1	B
8068.601	IN-EX	Polo 1.4 16V	AKQ		6.0	11.05	39.0	F-1	B
8068.601	IN-EX	Polo 1.4 16V	APE		6.0	11.05	39.0	F-1	B
8068.601	IN-EX	Polo 1.4 16V	AUA		6.0	11.05	39.0	F-1	B
8068.601	IN-EX	Polo 1.4 16V	AUB		6.0	11.05	39.0	F-1	B
8068.601	IN-EX	Polo 1.4 16V	BBY		6.0	11.05	39.0	F-1	B
8068.601	IN-EX	Polo 1.4 16V	BBZ		6.0	11.05	39.0	F-1	B
8068.601	IN-EX	Polo 1.4 16V	BKY		6.0	11.05	39.0	F-1	B
8068.601	IN-EX	Polo 1.4 16V	BUD		6.0	11.05	39.0	F-1	B
8068.601	IN-EX	Polo 1.4 FSI	AXU		6.0	11.05	39.0	F-1	B
8068.601	IN-EX	Polo 1.4 GTI	CAVE		6.0	11.05	39.0	F-1	B
8068.601	IN-EX	Polo 1.6 16V	BTS		6.0	11.05	39.0	F-1	B
8068.601	IN-EX	Polo 1.6 16V GTI	AJV		6.0	11.05	39.0	F-1	B
8052.701	IN-EX	POLO CLASSIC (6KV2), 100 1.6	AKL/APF/AEH/AUR/AFT	0371034188	7.0	12.06	36.4	G	B
8054.701	IN-EX	POLO CLASSIC (6KV2), 100 1.6	AKL/APF/AEH/AUR/AFT	056103419A	8.0	12.06	36.5	G	B
8052.701	IN-EX	POLO CLASSIC (6KV2), 110 1.9	AFN/ASV	0371034188	7.0	12.06	36.4	G	B
8052.701	IN-EX	POLO CLASSIC (6KV2), 57 1.7 S	AKW	0371034188	7.0	12.06	36.4	G	B
8052.701	IN-EX	POLO CLASSIC (6KV2), 64 1.9 S	AEY	0371034188	7.0	12.06	36.4	G	B
8052.701	IN-EX	POLO CLASSIC (6KV2), 68 1.9 S	AGP/AQM	0371034188	7.0	12.06	36.4	G	B
8054.701	IN-EX	POLO CLASSIC (6KV2), 75 1.6	1F	056103419A	8.0	12.06	36.5	G	B
8054.701	IN-EX	POLO CLASSIC (6KV2), 90 1.8	ADZ/ADD/ABS	056103419A	8.0	12.06	36.5	G	B
8052.701	IN-EX	POLO CLASSIC (6KV2), 90 1.9 T	ALE/AHU/AGR/ALH	0371034188	7.0	12.06	36.4	G	B
8054.701	IN-EX	POLO CLASSIC (86C, 80), 1.0	AAU/HZ/AAK	056103419A	8.0	12.06	36.5	G	B
8054.701	IN-EX	POLO CLASSIC (86C, 80), 1.3 D	MN	056103419A	8.0	12.06	36.5	G	B
8054.701	IN-EX	POLO CLASSIC (86C, 80), 1.4 D	1W	056103419A	8.0	12.06	36.5	G	B
8068.601	IN-EX	Polo Classic 1.4 16V	APE		6.0	11.05	39.0	F-1	B
8068.601	IN-EX	Polo Classic 1.4 16V	AUA		6.0	11.05	39.0	F-1	B
8054.701	IN-EX	POLO Coupe (86C, 80), 1.0	HZ	056103419A	8.0	12.06	36.5	G	B
8054.701	IN-EX	POLO Coupe (86C, 80), 1.0 KAT	AAU/AAK/ACM	056103419A	8.0	12.06	36.5	G	B
8054.701	IN-EX	POLO Coupe (86C, 80), 1.1	HB	056103419A	8.0	12.06	36.5	G	B
8054.701	IN-EX	POLO Coupe (86C, 80), 1.3	HH	056103419A	8.0	12.06	36.5	G	B
8054.701	IN-EX	POLO Coupe (86C, 80), 1.3 D	MN	056103419A	8.0	12.06	36.5	G	B
8054.701	IN-EX	POLO Coupe (86C, 80), 1.3 G40	PY	056103419A	8.0	12.06	36.5	G	B
8054.701	IN-EX	POLO Coupe (86C, 80), 1.3 G40	PY	056103419A	8.0	12.06	36.5	G	B
8054.701	IN-EX	POLO Coupe (86C, 80), 1.4 D	1W	056103419A	8.0	12.06	36.5	G	B
8052.701	IN-EX	POLO Kasten (6NF), 1.7 SDI	AKU	0371034188	7.0	12.06	36.4	G	B
8052.701	IN-EX	POLO Kasten (6NF), 1.9 D	AEF	0371034188	7.0	12.06	36.4	G	B
8054.701	IN-EX	POLO Kasten (6NF), 1.9 D	AEF	056103419A	8.0	12.06	36.5	G	B
8054.701	IN-EX	POLO Kasten (6NF), 1.9 SDI	AGD	056103419A	8.0	12.06	36.5	G	B
8054.701	IN-EX	POLO Kasten (86CF), 1.0	AAU	056103419A	8.0	12.06	36.5	G	B
8054.701	IN-EX	POLO Kasten (86CF), 1.3	AAV	056103419A	8.0	12.06	36.5	G	B
8054.701	IN-EX	POLO Kasten (86CF), 1.4 D	1W	056103419A	8.0	12.06	36.5	G	B
8052.701	IN-EX	POLO Stufenheck (9A4), 1.4 TDI	BAY	0371034188	7.0	12.06	36.4	G	B
8052.701	IN-EX	POLO Stufenheck (9A4), 1.9 SDI	ASY	0371034188	7.0	12.06	36.4	G	B
8052.701	IN-EX	POLO Variant (6KV5), 1.6	AKL/APF/AEH/AUR/AFT	0371034188	7.0	12.06	36.4	G	B
8052.701	IN-EX	POLO Variant (6KV5), 1.7 SDI	AKW	0371034188	7.0	12.06	36.4	G	B
8054.701	IN-EX	POLO Variant (6KV5), 1.8	ADZ	056103419A	8.0	12.06	36.5	G	B
8052.701	IN-EX	POLO Variant (6KV5), 1.9 SDI	AEY	0371034188	7.0	12.06	36.4	G	B
8052.701	IN-EX	POLO Variant (6KV5), 1.9 SDI	AGP/AQM	0371034188	7.0	12.06	36.4	G	B

(D1) Internal diameter, (D2) External diameter, (B) Shape, (C) Material

VALVE GUIDES

VOLKSWAGEN

IVT Ref.	Type	Model	Engine	OEM Ref.	D1	D2	Length	B	C
8054.701	IN-EX	POLO Variant (6KV5), 1.9 SDI	AGP/AQM	056103419A	8.0	12.06	36.5	G	B
8052.701	IN-EX	POLO Variant (6KV5), 1.9 TDI	AFN/ASV	0371034188	7.0	12.06	36.4	G	B
8052.701	IN-EX	POLO Variant (6KV5), 1.9 TDI	ALE/AHU/AGR/ALH	0371034188	7.0	12.06	36.4	G	B
8068.601	IN-EX	Polo Variant 1.4 16V	APE		6.0	11.05	39.0	F-1	B
8068.601	IN-EX	Polo Variant 1.4 16V	AUA		6.0	11.05	39.0	F-1	B
8054.701	IN-EX	SANTANA (32B), 1.3	FZ	056103419A	8.0	12.06	36.5	G	B
8054.701	IN-EX	SANTANA (32B), 1.6	DT	056103419A	8.0	12.06	36.5	G	B
8054.701	IN-EX	SANTANA (32B), 1.6	WV	056103419A	8.0	12.06	36.5	G	B
8054.701	IN-EX	SANTANA (32B), 1.6	YP	056103419A	8.0	12.06	36.5	G	B
8054.701	IN-EX	SANTANA (32B), 1.6 D	JK/CR	056103419A	8.0	12.06	36.5	G	B
8054.701	IN-EX	SANTANA (32B), 1.6 TD	CY	056103419A	8.0	12.06	36.5	G	B
8054.701	IN-EX	SANTANA (32B), 1.9	WN	056103419A	8.0	12.06	36.5	G	B
8054.701	IN-EX	SANTANA (32B), 2.0	JS/HP	056103419A	8.0	12.06	36.5	G	B
8071.701	IN-EX	SANTANA CL5 / GL5	WN	049103419	8.0	12.06	42.3	G	B
8071.701	IN-EX	SANTANA CX / GX / LX	DT	049103419	8.0	12.06	42.3	G	B
8071.701	IN-EX	SANTANA LX	DS	049103419	8.0	12.06	42.3	G	B
8071.701	IN-EX	SANTANA Topic	DS	049103419	8.0	12.06	42.3	G	B
8054.701	IN-EX	SCIROCCO (53), 1.1	FA	056103419A	8.0	12.06	36.5	G	B
8054.701	IN-EX	SCIROCCO (53), 1.3	GF	056103419A	8.0	12.06	36.5	G	B
8054.701	IN-EX	SCIROCCO (53), 1.5	FD	056103419A	8.0	12.06	36.5	G	B
8054.701	IN-EX	SCIROCCO (53), 1.5	FH	056103419A	8.0	12.06	36.5	G	B
8054.701	IN-EX	SCIROCCO (53), 1.5	JB	056103419A	8.0	12.06	36.5	G	B
8054.701	IN-EX	SCIROCCO (53), 1.5	ZB/YJ	056103419A	8.0	12.06	36.5	G	B
8054.701	IN-EX	SCIROCCO (53), 1.6	EG	056103419A	8.0	12.06	36.5	G	B
8054.701	IN-EX	SCIROCCO (53), 1.6	FN/FP	056103419A	8.0	12.06	36.5	G	B
8054.701	IN-EX	SCIROCCO (53), 1.6	FR	056103419A	8.0	12.06	36.5	G	B
8054.701	IN-EX	SCIROCCO (53B), 1.3	GF	056103419A	8.0	12.06	36.5	G	B
8054.701	IN-EX	SCIROCCO (53B), 1.5	JB	056103419A	8.0	12.06	36.5	G	B
8054.701	IN-EX	SCIROCCO (53B), 1.6	EG	056103419A	8.0	12.06	36.5	G	B
8054.701	IN-EX	SCIROCCO (53B), 1.6	EM	056103419A	8.0	12.06	36.5	G	B
8054.701	IN-EX	SCIROCCO (53B), 1.6	EW	056103419A	8.0	12.06	36.5	G	B
8054.701	IN-EX	SCIROCCO (53B), 1.6	FR	056103419A	8.0	12.06	36.5	G	B
8054.701	IN-EX	SCIROCCO (53B), 1.6	RE	056103419A	8.0	12.06	36.5	G	B
8054.701	IN-EX	SCIROCCO (53B), 1.8	EV/JJ/PB/DX	056103419A	8.0	12.06	36.5	G	B
8068.601	IN-EX	Scirocco 1.4 TSI	CAVD		6.0	11.05	39.0	F-1	B
8068.601	IN-EX	Scirocco 1.4 TSI	CAXA		6.0	11.05	39.0	F-1	B
8071.701	IN-EX	SCIROCCO GT / GTL	EW	049103419	8.0	12.06	42.3	G	B
8078.601	IN-EX	SCIROCCO GT / GTX 16V	PL / PR	027103415	7.0	12.06	38.0	F	B
8064.701	IN-EX	SCIROCCO GT / GTX 16V	PL / PR	027103419	7.0	12.06	38.0	G	B
8052.701	IN-EX	SHARAN (7M8, 7M9, 7M6), 1.9 T	ANU/1Z/AHU	0371034188	7.0	12.06	36.4	G	B
8054.701	IN-EX	SHARAN (7M8, 7M9, 7M6), 1.9 T	ANU/1Z/AHU	056103419A	8.0	12.06	36.5	G	B
8052.701	IN-EX	SHARAN (7M8, 7M9, 7M6), 1.9 T	ASZ	0371034188	7.0	12.06	36.4	G	B
8052.701	IN-EX	SHARAN (7M8, 7M9, 7M6), 1.9 T	AVG/AFN	0371034188	7.0	12.06	36.4	G	B
8052.701	IN-EX	SHARAN (7M8, 7M9, 7M6), 1.9 T	BVK/AUY	0371034188	7.0	12.06	36.4	G	B
8052.701	IN-EX	SHARAN (7M8, 7M9, 7M6), 1.9 T	BVK/AUY	0371034188	7.0	12.06	36.4	G	B
8052.701	IN-EX	SHARAN (7M8, 7M9, 7M6), 2.0	ATM/ADY	0371034188	7.0	12.06	36.4	G	B
8052.701	IN-EX	SHARAN (7M8, 7M9, 7M6), 2.0 L	ATM	0371034188	7.0	12.06	36.4	G	B
8170.601	IN-EX	SHARAN (7M8, 7M9, 7M6), 2.0 T	BRT		6.0	10.06	42.0	F	B
8068.601	IN-EX	Sharan 1.4 TSI	CAVA		6.0	11.05	39.0	F-1	B
8068.601	IN-EX	Tiguan 1.4 FSI	CAVB		6.0	11.05	39.0	F-1	B
8068.601	IN-EX	Tiguan 1.4 TSI	BWK		6.0	11.05	39.0	F-1	B
8068.601	IN-EX	Tiguan 1.4 TSI	CAVA		6.0	11.05	39.0	F-1	B
8068.601	IN-EX	Tiguan 1.4 TSI	CAVD		6.0	11.05	39.0	F-1	B
8068.601	IN-EX	Tiguan 1.4 TSI	CAXA		6.0	11.05	39.0	F-1	B
8068.601	IN-EX	Tiguan 1.4 TSI 4motion	BWK		6.0	11.05	39.0	F-1	B
8068.601	IN-EX	Tiguan 1.4 TSI 4motion	CAVA		6.0	11.05	39.0	F-1	B
8068.601	IN-EX	Tiguan 1.4 TSI 4motion	CAVD		6.0	11.05	39.0	F-1	B
8052.701	IN-EX	TOUAREG (7LA, 7L6, 7L7), 2.5 R	BPE/BAC	0371034188	7.0	12.06	36.4	G	B
8052.701	IN-EX	TOUAREG (7LA, 7L6, 7L7), 5.0 V	AYH/BLE/BWF	0371034188	7.0	12.06	36.4	G	B
8037.601	IN-EX	TOURAN (1T1, 1T2), 1.6	BGU/BSF/BSE		6.0	12.06	36.4	F	B
8052.701	IN-EX	TOURAN (1T1, 1T2), 1.9 TDI	BXE/BKC/BLS	0371034188	7.0	12.06	36.4	G	B
8170.601	IN-EX	TOURAN (1T1, 1T2), 2.0 TDI	AZV		6.0	10.06	42.0	F	B

(D1) Internal diameter, (D2) External diameter, (B) Shape, (C) Material

VALVE GUIDES

VOLKSWAGEN

IVT Ref.	Type	Model	Engine	OEM Ref.	D1	D2	Length	B	C
8170.601	IN-EX	TOURAN (1T1, 1T2), 2.0 TDI	BMM		6.0	10.06	42.0	F	B
8170.601	IN-EX	TOURAN (1T1, 1T2), 2.0 TDI 16V	BKD		6.0	10.06	42.0	F	B
8170.601	IN-EX	TOURAN (1T3), 2.0 TDI	CFHC		6.0	10.06	42.0	F	B
8068.601	IN-EX	Touran 1.4 TSI	BLG		6.0	11.05	39.0	F-1	B
8068.601	IN-EX	Touran 1.4 TSI	BMY		6.0	11.05	39.0	F-1	B
8068.601	IN-EX	Touran 1.4 TSI	CAVB		6.0	11.05	39.0	F-1	B
8068.601	IN-EX	Touran 1.4 TSI	CAVC		6.0	11.05	39.0	F-1	B
8068.601	IN-EX	Touran 1.6 FSI	BAG		6.0	11.05	39.0	F-1	B
8068.601	IN-EX	Touran 1.6 FSI	BLF		6.0	11.05	39.0	F-1	B
8068.601	IN-EX	Touran 1.6 FSI	BLP		6.0	11.05	39.0	F-1	B
8054.701	IN-EX	TRANSPORTER III Bus, 1.6 D	CS	056103419A	8.0	12.06	36.5	G	B
8054.701	IN-EX	TRANSPORTER III Bus, 1.6 TD	JX	056103419A	8.0	12.06	36.5	G	B
8054.701	IN-EX	TRANSPORTER III Bus, 1.6 TD S	JX	056103419A	8.0	12.06	36.5	G	B
8054.701	IN-EX	TRANSPORTER III Bus, 1.7 D	KY	056103419A	8.0	12.06	36.5	G	B
8054.701	IN-EX	TRANSPORTER III Kasten, 1.6 D	CS	056103419A	8.0	12.06	36.5	G	B
8054.701	IN-EX	TRANSPORTER III Kasten, 1.6 T	JX	056103419A	8.0	12.06	36.5	G	B
8054.701	IN-EX	TRANSPORTER III Kasten, 1.6 T	JX	056103419A	8.0	12.06	36.5	G	B
8054.701	IN-EX	TRANSPORTER III Kasten, 1.7 D	KY	056103419A	8.0	12.06	36.5	G	B
8054.701	IN-EX	TRANSPORTER III Kasten, 1.7 D	KY	056103419A	8.0	12.06	36.5	G	B
8054.701	IN-EX	TRANSPORTER III Pritsche/Fahr	CS	056103419A	8.0	12.06	36.5	G	B
8054.701	IN-EX	TRANSPORTER III Pritsche/Fahr	JX	056103419A	8.0	12.06	36.5	G	B
8054.701	IN-EX	TRANSPORTER III Pritsche/Fahr	JX	056103419A	8.0	12.06	36.5	G	B
8054.701	IN-EX	TRANSPORTER III Pritsche/Fahr	KY	056103419A	8.0	12.06	36.5	G	B
8054.701	IN-EX	TRANSPORTER IV Bus (70XB, 7	PD	056103419A	8.0	12.06	36.5	G	B
8052.701	IN-EX	TRANSPORTER IV Bus (70XB, 7	1X	0371034188	7.0	12.06	36.4	G	B
8052.701	IN-EX	TRANSPORTER IV Bus (70XB, 7	1X	0371034188	7.0	12.06	36.4	G	B
8054.701	IN-EX	TRANSPORTER IV Bus (70XB, 7	1X	056103419A	8.0	12.06	36.5	G	B
8054.701	IN-EX	TRANSPORTER IV Bus (70XB, 7	1X	056103419A	8.0	12.06	36.5	G	B
8052.701	IN-EX	TRANSPORTER IV Bus (70XB, 7	ABL	0371034188	7.0	12.06	36.4	G	B
8054.701	IN-EX	TRANSPORTER IV Bus (70XB, 7	ABL	056103419A	8.0	12.06	36.5	G	B
8054.701	IN-EX	TRANSPORTER IV Bus (70XB, 7	AAC	056103419A	8.0	12.06	36.5	G	B
8052.701	IN-EX	TRANSPORTER IV Bus (70XB, 7	AAB	0371034188	7.0	12.06	36.4	G	B
8054.701	IN-EX	TRANSPORTER IV Bus (70XB, 7	AAB	056103419A	8.0	12.06	36.5	G	B
8052.701	IN-EX	TRANSPORTER IV Bus (70XB, 7	AAB	0371034188	7.0	12.06	36.4	G	B
8054.701	IN-EX	TRANSPORTER IV Bus (70XB, 7	AAB	056103419A	8.0	12.06	36.5	G	B
8054.701	IN-EX	TRANSPORTER IV Bus (70XB, 7	AEN/AAF/ACU/AEU	056103419A	8.0	12.06	36.5	G	B
8054.701	IN-EX	TRANSPORTER IV Bus (70XB, 7	AVT/AET/APL	056103419A	8.0	12.06	36.5	G	B
8054.701	IN-EX	TRANSPORTER IV Bus (70XB, 7	AEN/AAF/ACU/AEU	056103419A	8.0	12.06	36.5	G	B
8054.701	IN-EX	TRANSPORTER IV Bus (70XB, 7	AVT/AET/APL	056103419A	8.0	12.06	36.5	G	B
8052.701	IN-EX	TRANSPORTER IV Bus (70XB, 7	AXL/ACV	0371034188	7.0	12.06	36.4	G	B
8054.701	IN-EX	TRANSPORTER IV Bus (70XB, 7	AXL/ACV	056103419A	8.0	12.06	36.5	G	B
8052.701	IN-EX	TRANSPORTER IV Kasten (70XA	1X	0371034188	7.0	12.06	36.4	G	B
8052.701	IN-EX	TRANSPORTER IV Kasten (70XA	1X	0371034188	7.0	12.06	36.4	G	B
8054.701	IN-EX	TRANSPORTER IV Kasten (70XA	1X	056103419A	8.0	12.06	36.5	G	B
8054.701	IN-EX	TRANSPORTER IV Kasten (70XA	1X	056103419A	8.0	12.06	36.5	G	B
8052.701	IN-EX	TRANSPORTER IV Kasten (70XA	ABL	0371034188	7.0	12.06	36.4	G	B
8054.701	IN-EX	TRANSPORTER IV Kasten (70XA	ABL	056103419A	8.0	12.06	36.5	G	B
8054.701	IN-EX	TRANSPORTER IV Kasten (70XA	AAC	056103419A	8.0	12.06	36.5	G	B
8052.701	IN-EX	TRANSPORTER IV Kasten (70XA	AAB	0371034188	7.0	12.06	36.4	G	B
8054.701	IN-EX	TRANSPORTER IV Kasten (70XA	AAB	056103419A	8.0	12.06	36.5	G	B
8052.701	IN-EX	TRANSPORTER IV Kasten (70XA	AAB	0371034188	7.0	12.06	36.4	G	B
8054.701	IN-EX	TRANSPORTER IV Kasten (70XA	AAB	056103419A	8.0	12.06	36.5	G	B
8054.701	IN-EX	TRANSPORTER IV Kasten (70XA	AEN/AAF/ACU/AEU	056103419A	8.0	12.06	36.5	G	B
8054.701	IN-EX	TRANSPORTER IV Kasten (70XA	AVT/AET/APL	056103419A	8.0	12.06	36.5	G	B
8054.701	IN-EX	TRANSPORTER IV Kasten (70XA	AEN/AAF/ACU/AEU	056103419A	8.0	12.06	36.5	G	B
8054.701	IN-EX	TRANSPORTER IV Kasten (70XA	AVT/AET/APL	056103419A	8.0	12.06	36.5	G	B
8052.701	IN-EX	TRANSPORTER IV Kasten (70XA	AXL/ACV	0371034188	7.0	12.06	36.4	G	B
8054.701	IN-EX	TRANSPORTER IV Kasten (70XA	AXL/ACV	056103419A	8.0	12.06	36.5	G	B
8052.701	IN-EX	TRANSPORTER IV Pritsche/Fahr	1X	0371034188	7.0	12.06	36.4	G	B
8052.701	IN-EX	TRANSPORTER IV Pritsche/Fahr	1X	0371034188	7.0	12.06	36.4	G	B
8054.701	IN-EX	TRANSPORTER IV Pritsche/Fahr	1X	056103419A	8.0	12.06	36.5	G	B
8054.701	IN-EX	TRANSPORTER IV Pritsche/Fahr	1X	056103419A	8.0	12.06	36.5	G	B

(D1) Internal diameter, (D2) External diameter, (B) Shape, (C) Material

VALVE GUIDES

IVT Ref.	Type	Model	Engine	OEM Ref.	D1	D2	Length	B	C
VOLKSWAGEN									
8052.701	IN-EX	TRANSPORTER IV Pritsche/Fahr	ABL	0371034188	7.0	12.06	36.4	G	B
8054.701	IN-EX	TRANSPORTER IV Pritsche/Fahr	ABL	056103419A	8.0	12.06	36.5	G	B
8054.701	IN-EX	TRANSPORTER IV Pritsche/Fahr	AAC	056103419A	8.0	12.06	36.5	G	B
8052.701	IN-EX	TRANSPORTER IV Pritsche/Fahr	AAB	0371034188	7.0	12.06	36.4	G	B
8054.701	IN-EX	TRANSPORTER IV Pritsche/Fahr	AAB	056103419A	8.0	12.06	36.5	G	B
8052.701	IN-EX	TRANSPORTER IV Pritsche/Fahr	AAB	0371034188	7.0	12.06	36.4	G	B
8054.701	IN-EX	TRANSPORTER IV Pritsche/Fahr	AAB	056103419A	8.0	12.06	36.5	G	B
8054.701	IN-EX	TRANSPORTER IV Pritsche/Fahr	AEN/AAF/ACU/AEU	056103419A	8.0	12.06	36.5	G	B
8054.701	IN-EX	TRANSPORTER IV Pritsche/Fahr	AVT/AET/APL	056103419A	8.0	12.06	36.5	G	B
8054.701	IN-EX	TRANSPORTER IV Pritsche/Fahr	AEN/AAF/ACU/AEU	056103419A	8.0	12.06	36.5	G	B
8054.701	IN-EX	TRANSPORTER IV Pritsche/Fahr	AVT/AET/APL	056103419A	8.0	12.06	36.5	G	B
8052.701	IN-EX	TRANSPORTER IV Pritsche/Fahr	AYC/AUF/ACV	0371034188	7.0	12.06	36.4	G	B
8054.701	IN-EX	TRANSPORTER IV Pritsche/Fahr	AYC/AUF/ACV	056103419A	8.0	12.06	36.5	G	B
8052.701	IN-EX	TRANSPORTER IV Pritsche/Fahr	AXL/ACV	0371034188	7.0	12.06	36.4	G	B
8054.701	IN-EX	TRANSPORTER IV Pritsche/Fahr	AXL/ACV	056103419A	8.0	12.06	36.5	G	B
8052.701	IN-EX	TRANSPORTER V Bus (7HB, 7H	AXB	0371034188	7.0	12.06	36.4	G	B
8052.701	IN-EX	TRANSPORTER V Bus (7HB, 7H	AXC	0371034188	7.0	12.06	36.4	G	B
8052.701	IN-EX	TRANSPORTER V Bus (7HB, 7H	AXA	0371034188	7.0	12.06	36.4	G	B
8052.701	IN-EX	TRANSPORTER V Bus (7HB, 7H	AXD/BNZ	0371034188	7.0	12.06	36.4	G	B
8052.701	IN-EX	TRANSPORTER V Bus (7HB, 7H	AXE/BPC	0371034188	7.0	12.06	36.4	G	B
8052.701	IN-EX	TRANSPORTER V Bus (7HB, 7H	AXD/BNZ	0371034188	7.0	12.06	36.4	G	B
8052.701	IN-EX	TRANSPORTER V Bus (7HB, 7H	AXE/BPC	0371034188	7.0	12.06	36.4	G	B
8052.701	IN-EX	TRANSPORTER V Kasten (7HA,	AXB	0371034188	7.0	12.06	36.4	G	B
8052.701	IN-EX	TRANSPORTER V Kasten (7HA,	AXC	0371034188	7.0	12.06	36.4	G	B
8052.701	IN-EX	TRANSPORTER V Kasten (7HA,	AXA	0371034188	7.0	12.06	36.4	G	B
8052.701	IN-EX	TRANSPORTER V Kasten (7HA,	AXD/BNZ	0371034188	7.0	12.06	36.4	G	B
8052.701	IN-EX	TRANSPORTER V Kasten (7HA,	AXE/BPC	0371034188	7.0	12.06	36.4	G	B
8052.701	IN-EX	TRANSPORTER V Kasten (7HA,	AXD/BNZ	0371034188	7.0	12.06	36.4	G	B
8052.701	IN-EX	TRANSPORTER V Kasten (7HA,	AXE/BPC	0371034188	7.0	12.06	36.4	G	B
8052.701	IN-EX	TRANSPORTER V Pritsche/Fahrg	AXB	0371034188	7.0	12.06	36.4	G	B
8052.701	IN-EX	TRANSPORTER V Pritsche/Fahrg	AXC	0371034188	7.0	12.06	36.4	G	B
8052.701	IN-EX	TRANSPORTER V Pritsche/Fahrg	AXA	0371034188	7.0	12.06	36.4	G	B
8052.701	IN-EX	TRANSPORTER V Pritsche/Fahrg	AXD/BNZ	0371034188	7.0	12.06	36.4	G	B
8052.701	IN-EX	TRANSPORTER V Pritsche/Fahrg	AXE/BPC	0371034188	7.0	12.06	36.4	G	B
8052.701	IN-EX	TRANSPORTER V Pritsche/Fahrg	AXD/BNZ	0371034188	7.0	12.06	36.4	G	B
8052.701	IN-EX	TRANSPORTER V Pritsche/Fahrg	AXE/BPC	0371034188	7.0	12.06	36.4	G	B
8054.701	IN-EX	VENTO (1H2), 1.4	AEX/ABD	056103419A	8.0	12.06	36.5	G	B
8052.701	IN-EX	VENTO (1H2), 1.6	AEK/AFT	0371034188	7.0	12.06	36.4	G	B
8054.701	IN-EX	VENTO (1H2), 1.8	AAM	056103419A	8.0	12.06	36.5	G	B
8054.701	IN-EX	VENTO (1H2), 1.8	ADZ/ABS	056103419A	8.0	12.06	36.5	G	B
8052.701	IN-EX	VENTO (1H2), 1.9 D	1Y	0371034188	7.0	12.06	36.4	G	B
8054.701	IN-EX	VENTO (1H2), 1.9 D	1Y	056103419A	8.0	12.06	36.5	G	B
8052.701	IN-EX	VENTO (1H2), 1.9 SDI	AEY	0371034188	7.0	12.06	36.4	G	B
8052.701	IN-EX	VENTO (1H2), 1.9 TD	AAZ	0371034188	7.0	12.06	36.4	G	B
8054.701	IN-EX	VENTO (1H2), 1.9 TD	AAZ	056103419A	8.0	12.06	36.5	G	B
8052.701	IN-EX	VENTO (1H2), 1.9 TDI	AFN	0371034188	7.0	12.06	36.4	G	B
8052.701	IN-EX	VENTO (1H2), 1.9 TDI	ALE/1Z/AHU	0371034188	7.0	12.06	36.4	G	B
8054.701	IN-EX	VENTO (1H2), 1.9 TDI	ALE/1Z/AHU	056103419A	8.0	12.06	36.5	G	B
8054.701	IN-EX	VENTO (1H2), 2.0	ADY/AKR/2E/AGG	056103419A	8.0	12.06	36.5	G	B
VOLVO									
8145.600	EX	140 (142, 144), 2.0	B 20 A	419653	8.0	13.5	59.2	F	G
8145.600	EX	140 (142, 144), 2.0	B 20 D	419653	8.0	13.5	59.2	F	G
8145.600	EX	140 (142, 144), 2.0	B 20 E	419653	8.0	13.5	59.2	F	G
8145.600	EX	140 (142, 144), 2.0 S	B 20 B	419653	8.0	13.5	59.2	F	G
8175.901	IN-EX	140 (142, 144), 2.0 S	B 20 F	3343624	8.0	13.07	37.7	P	B
8145.600	EX	140 Kombi (145), 2.0 S	B 20 A	419653	8.0	13.5	59.2	F	G
8145.600	EX	140 Kombi (145), 2.0 S	B 20 B	419653	8.0	13.5	59.2	F	G
8145.600	EX	140 Kombi (145), 2.0 S	B 20 B	419653	8.0	13.5	59.2	F	G
8145.600	EX	140 Kombi (145), 2.0 S	B 20 E	419653	8.0	13.5	59.2	F	G
8175.901	IN-EX	140 Kombi (145), 2.0 S	B 20 F	3343624	8.0	13.07	37.7	P	B
8145.600	EX	164, 2.9	B 30 E	419653	8.0	13.5	59.2	F	G

(D1) Internal diameter, (D2) External diameter, (B) Shape, (C) Material

VALVE GUIDES

IVT Ref.	Type	Model	Engine	OEM Ref.	D1	D2	Length	B	C
VOLVO									
8145.600	EX	164, 2.9 E	B 30 A	419653	8.0	13.5	59.2	F	G
8145.600	EX	240 (P242, P244), 2.0	B 20 A	419653	8.0	13.5	59.2	F	G
8054.701	IN-EX	240 (P242, P244), 2.4 Diesel	D 24	056103419A	8.0	12.06	36.5	G	B
8054.701	IN-EX	240 (P242, P244), 2.4 Diesel	D 24	056103419A	8.0	12.06	36.5	G	B
8145.600	EX	240 Kombi (P245), 2.0	B 20 A	419653	8.0	13.5	59.2	F	G
8054.701	IN-EX	240 Kombi (P245), 2.4 Diesel	D 24	056103419A	8.0	12.06	36.5	G	B
8135.601	IN-EX	340-360 (343, 345), 1.6 Diesel	D 16		8.0	13.1	39.0	F	B
8175.901	IN-EX	340-360 (343, 345), 1.7	B 17 2 K	3343624	8.0	13.07	37.7	P	B
8135.601	IN-EX	340-360 Stufenheck (344), 1.6 Die	D 16		8.0	13.1	39.0	F	B
8175.901	IN-EX	340-360 Stufenheck (344), 1.7	B 17 2 K	3343624	8.0	13.07	37.7	P	B
8175.901	IN-EX	440 K (445), 1.7	B 18 EP	3343624	8.0	13.07	37.7	P	B
8175.901	IN-EX	440 K (445), 1.7	B 18 F	3343624	8.0	13.07	37.7	P	B
8175.901	IN-EX	440 K (445), 1.7 Turbo	B 18 FT	3343624	8.0	13.07	37.7	P	B
8175.901	IN-EX	440 K (445), 1.7 Turbo	B 18 FT	3343624	8.0	13.07	37.7	P	B
8175.901	IN-EX	440 K (445), 1.8	B 18 U	3343624	8.0	13.07	37.7	P	B
8175.901	IN-EX	440 K (445), 1.8	B 18 U	3343624	8.0	13.07	37.7	P	B
8135.601	IN-EX	440 K (445), 1.9 Turbo-Diesel	D 19 T		8.0	13.1	39.0	F	B
8175.901	IN-EX	440 K (445), 2.0	B 20 F	3343624	8.0	13.07	37.7	P	B
8175.901	IN-EX	440 K (445), 2.0	B 20 F	3343624	8.0	13.07	37.7	P	B
8175.901	IN-EX	460 L (464), 1.7	B 18 EP	3343624	8.0	13.07	37.7	P	B
8175.901	IN-EX	460 L (464), 1.7 Turbo	B 18 FT	3343624	8.0	13.07	37.7	P	B
8175.901	IN-EX	460 L (464), 1.7 Turbo	B 18 FT	3343624	8.0	13.07	37.7	P	B
8175.901	IN-EX	460 L (464), 1.8	B 18 U	3343624	8.0	13.07	37.7	P	B
8135.601	IN-EX	460 L (464), 1.9 Turbo-Diesel	D 19 T		8.0	13.1	39.0	F	B
8175.901	IN-EX	460 L (464), 2.0	B 20 F	3343624	8.0	13.07	37.7	P	B
8175.901	IN-EX	460 L (464), 2.0	B 20 F	3343624	8.0	13.07	37.7	P	B
8175.901	IN-EX	480 E, 1.7	B 18 E	3343624	8.0	13.07	37.7	P	B
8175.901	IN-EX	480 E, 1.7	B 18 E	3343624	8.0	13.07	37.7	P	B
8175.901	IN-EX	480 E, 1.7	B 18 EP	3343624	8.0	13.07	37.7	P	B
8175.901	IN-EX	480 E, 1.7	B 18 F	3343624	8.0	13.07	37.7	P	B
8175.901	IN-EX	480 E, 1.7 Turbo	B 18 FT	3343624	8.0	13.07	37.7	P	B
8175.901	IN-EX	480 E, 1.7 Turbo	B 18 FT	3343624	8.0	13.07	37.7	P	B
8175.901	IN-EX	480 E, 2.0	B 20 F	3343624	8.0	13.07	37.7	P	B
8054.701	IN-EX	740 (744), 2.4 Diesel	D 24	056103419A	8.0	12.06	36.5	G	B
8054.701	IN-EX	740 (744), 2.4 TD	D 24 T	056103419A	8.0	12.06	36.5	G	B
8054.701	IN-EX	740 Kombi (745), 2.4 Turbo-Diesel	D 24 T	056103419A	8.0	12.06	36.5	G	B
8054.701	IN-EX	760 (704, 764), 2.4 D	D 24	056103419A	8.0	12.06	36.5	G	B
8054.701	IN-EX	760 (704, 764), 2.4 TD Interc. (70	D 24 TIC	056103419A	8.0	12.06	36.5	G	B
8054.701	IN-EX	760 (704, 764), 2.4 Turbo Diesel (	D 24 T	056103419A	8.0	12.06	36.5	G	B
8054.701	IN-EX	760 (704, 764), 2.4 Turbo Diesel (	D 24 T	056103419A	8.0	12.06	36.5	G	B
8134.601	IN-EX	760 (704, 764), 2.8 (704)	B 280 F	022072	8.0	13.07	45.0	F	B
8134.601	IN-EX	760 (704, 764), 2.8 (764)	B 280 F	022072	8.0	13.07	45.0	F	B
8054.701	IN-EX	760 Kombi (704, 765), 2.4 D	D 24	056103419A	8.0	12.06	36.5	G	B
8054.701	IN-EX	760 Kombi (704, 765), 2.4 TD Inte	D 24 TIC	056103419A	8.0	12.06	36.5	G	B
8134.601	IN-EX	760 Kombi (704, 765), 2.8 (765)	B 280 E/B 28 E	022072	8.0	13.07	45.0	F	B
8134.601	IN-EX	760 Kombi (704, 765), 2.8 (765)	B 280 F	022072	8.0	13.07	45.0	F	B
8134.601	IN-EX	780, 2.9	B 280 E	022072	8.0	13.07	45.0	F	B
8134.601	IN-EX	780, 2.9	B 280 F	022072	8.0	13.07	45.0	F	B
8054.701	IN-EX	850 (LS), 2.5 TDI	D 5252 T	056103419A	8.0	12.06	36.5	G	B
8054.701	IN-EX	850 Kombi (LW), 2.5 TDI	D 5252 T	056103419A	8.0	12.06	36.5	G	B
8054.701	IN-EX	940 (944), 2.4 D	D 24	056103419A	8.0	12.06	36.5	G	B
8054.701	IN-EX	940 (944), 2.4 TD Intercooler	D 24 TIC	056103419A	8.0	12.06	36.5	G	B
8054.701	IN-EX	940 (944), 2.4 Turbo Diesel	D 24 T	056103419A	8.0	12.06	36.5	G	B
8054.701	IN-EX	940 II (944), 2.4 TD Interc.	D 24 TIC	056103419A	8.0	12.06	36.5	G	B
8054.701	IN-EX	940 II Kombi (945), 2.4 TD Interc.	D 24 TIC	056103419A	8.0	12.06	36.5	G	B
8054.701	IN-EX	940 Kombi (945), 2.4 D	D 24	056103419A	8.0	12.06	36.5	G	B
8054.701	IN-EX	940 Kombi (945), 2.4 TD Intercool	D 24 TIC	056103419A	8.0	12.06	36.5	G	B
8054.701	IN-EX	940 Kombi (945), 2.4 Turbo Diesel	D 24 T	056103419A	8.0	12.06	36.5	G	B
8054.701	IN-EX	960 (964), 2.4 TD Interc.	D 24 TIC	056103419A	8.0	12.06	36.5	G	B
8054.701	IN-EX	960 Kombi (965), 2.4 TD Interc.	D 24 TIC	056103419A	8.0	12.06	36.5	G	B
8021.900	IN-EX	C30, 1.6	-		6.0	11.04	40.5	P	G
8165.104	IN-EX	C30, 1.6 D	D 4164 T	0220A6	5.5	9.55	34.0	A	S03

(D1) Internal diameter, (D2) External diameter, (B) Shape, (C) Material

VALVE GUIDES

IVT Ref.	Type	Model	Engine	OEM Ref.	D1	D2	Length	B	C
VOLVO									
8129.104	IN-EX	C30, 1.8	B 4184 S11	LFY110281	5.5	11.05	39.0	A	S03
8129.104	IN-EX	C30, 1.8 FlexFuel	B 4184 S8	LFY110281	5.5	11.05	39.0	A	S03
8129.104	IN-EX	C30, 2.0	B 4204 S3	LFY110281	5.5	11.05	39.0	A	S03
8129.104	IN-EX	C30, 2.0 FlexFuel	B 4204 S4	LFY110281	5.5	11.05	39.0	A	S03
8136.604	IN-EX	C30, D5	D 5244 T8/D 5244 T13		6.0	11.55	39.6	F	S03
8160.604	IN-EX	C30, T5	B 5254 T3		6.0	11.99	45.0	F	S03
8136.604	IN-EX	C70 II Cabriolet, D5	D 5244 T8/D 5244 T13		6.0	11.55	39.6	F	S03
8160.604	IN-EX	C70 II Cabriolet, T5	B 5254 T3		6.0	11.99	45.0	F	S03
8145.600	EX	P 121, 2.0	B 20 A	419653	8.0	13.5	59.2	F	G
8145.600	EX	P 122 S AMAZON, 2.0	B 20 B	419653	8.0	13.5	59.2	F	G
8069.601	IN-EX	S40 I 1.9 DI	D 4192 T2	7700859086	7.0	12.06	38.3	F-1	B
8069.601	IN-EX	S40 I 1.9 DI	D 4192 T2	M889393	7.0	12.06	38.3	F-1	B
8069.601	IN-EX	S40 I 1.9 DI	D 4192 T3	7700859086	7.0	12.06	38.3	F-1	B
8069.601	IN-EX	S40 I 1.9 DI	D 4192 T3	M889393	7.0	12.06	38.3	F-1	B
8069.601	IN-EX	S40 I 1.9 DI	D 4192 T4	7700859086	7.0	12.06	38.3	F-1	B
8069.601	IN-EX	S40 I 1.9 DI	D 4192 T4	M889393	7.0	12.06	38.3	F-1	B
8021.900	IN-EX	S40 II (MS), 1.6	-		6.0	11.04	40.5	P	G
8165.104	IN-EX	S40 II (MS), 1.6 D	D 4164 T	0220A6	5.5	9.55	34.0	A	S03
8129.104	IN-EX	S40 II (MS), 1.8	B 4184 S11	LFY110281	5.5	11.05	39.0	A	S03
8129.104	IN-EX	S40 II (MS), 1.8 FlexFuel	B 4184 S8	LFY110281	5.5	11.05	39.0	A	S03
8129.104	IN-EX	S40 II (MS), 2.0	B 4204 S3	LFY110281	5.5	11.05	39.0	A	S03
8129.104	IN-EX	S40 II (MS), 2.0 F	B 4204 S4	LFY110281	5.5	11.05	39.0	A	S03
8136.604	IN-EX	S40 II (MS), 2.4 D5	D 5244 T8/D 5244 T13		6.0	11.55	39.6	F	S03
8160.604	IN-EX	S40 II (MS), T5	B 5254 T3		6.0	11.99	45.0	F	S03
8160.604	IN-EX	S40 II (MS), T5 AWD	B 5254 T3		6.0	11.99	45.0	F	S03
8160.604	IN-EX	S60 I, 2.0 T	B 5204 T5		6.0	11.99	45.0	F	S03
8136.604	IN-EX	S60 I, 2.4 D	D 5244 T2		6.0	11.55	39.6	F	S03
8136.604	IN-EX	S60 I, 2.4 D	D 5244 T7		6.0	11.55	39.6	F	S03
8136.604	IN-EX	S60 I, 2.4 D5	D 5244 T4		6.0	11.55	39.6	F	S03
8160.604	IN-EX	S60 I, 2.4 T	B 5244 T3		6.0	11.99	45.0	F	S03
8160.604	IN-EX	S60 I, 2.4 T AWD	B 5244 T3		6.0	11.99	45.0	F	S03
8160.604	IN-EX	S60 I, 2.4 T5	B 5244 T5		6.0	11.99	45.0	F	S03
8160.604	IN-EX	S60 I, 2.5 T	B 5254 T2		6.0	11.99	45.0	F	S03
8160.604	IN-EX	S60 I, 2.5 T AWD	B 5254 T2		6.0	11.99	45.0	F	S03
8160.604	IN-EX	S60 I, R 2,5 T AWD	B 5254 T4		6.0	11.99	45.0	F	S03
8054.701	IN-EX	S70 (LS), 2.5 TDI	D 5252 T	056103419A	8.0	12.06	36.5	G	B
8054.701	IN-EX	S70 (LS), 2.5 TDi AWD	D 5252 T	056103419A	8.0	12.06	36.5	G	B
8160.604	IN-EX	S80 I (TS, XY), 2.0 T	B 5204 T5		6.0	11.99	45.0	F	S03
8136.604	IN-EX	S80 I (TS, XY), 2.4 D	D 5244 T2		6.0	11.55	39.6	F	S03
8136.604	IN-EX	S80 I (TS, XY), 2.4 D5	D 5244 T		6.0	11.55	39.6	F	S03
8160.604	IN-EX	S80 I (TS, XY), 2.4 T	B 5244 T3		6.0	11.99	45.0	F	S03
8160.604	IN-EX	S80 I (TS, XY), 2.4 T5 AWD	B 5244 T3		6.0	11.99	45.0	F	S03
8160.604	IN-EX	S80 I (TS, XY), 2.5 T	B 5254 T2		6.0	11.99	45.0	F	S03
8160.604	IN-EX	S80 I (TS, XY), 2.5 T AWD	B 5254 T2		6.0	11.99	45.0	F	S03
8054.701	IN-EX	S80 I (TS, XY), 2.5 TDI	D 5252 T	056103419A	8.0	12.06	36.5	G	B
8160.604	IN-EX	S80 I (TS, XY), 2.8 T6	B 6284 T		6.0	11.99	45.0	F	S03
8160.604	IN-EX	S80 I (TS, XY), 3.0 T6	B 6294 T		6.0	11.99	45.0	F	S03
8129.104	IN-EX	S80 II (AS), 2.0	B 4204 S3	LFY110281	5.5	11.05	39.0	A	S03
8129.104	IN-EX	S80 II (AS), 2.0 FlexFuel	B 4204 S4	LFY110281	5.5	11.05	39.0	A	S03
8136.604	IN-EX	S80 II (AS), 2.4 D	D 5244 T/D 5244 T5		6.0	11.55	39.6	F	S03
8136.604	IN-EX	S80 II (AS), D5	D 5244 T4		6.0	11.55	39.6	F	S03
8136.604	IN-EX	S80 II (AS), D5 AWD	D 5244 T4		6.0	11.55	39.6	F	S03
8069.601	IN-EX	V40 SW 1.9 DI	D 4192 T2	7700859086	7.0	12.06	38.3	F-1	B
8069.601	IN-EX	V40 SW 1.9 DI	D 4192 T2	M889393	7.0	12.06	38.3	F-1	B
8069.601	IN-EX	V40 SW 1.9 DI	D 4192 T3	7700859086	7.0	12.06	38.3	F-1	B
8069.601	IN-EX	V40 SW 1.9 DI	D 4192 T3	M889393	7.0	12.06	38.3	F-1	B
8069.601	IN-EX	V40 SW 1.9 DI	D 4192 T4	7700859086	7.0	12.06	38.3	F-1	B
8069.601	IN-EX	V40 SW 1.9 DI	D 4192 T4	M889393	7.0	12.06	38.3	F-1	B
8021.900	IN-EX	V50 (MW), 1.6	-		6.0	11.04	40.5	P	G
8165.104	IN-EX	V50 (MW), 1.6 D	D 4164 T	0220A6	5.5	9.55	34.0	A	S03
8129.104	IN-EX	V50 (MW), 1.8	B 4184 S11	LFY110281	5.5	11.05	39.0	A	S03
8129.104	IN-EX	V50 (MW), 1.8 FlexFuel	B 4184 S8	LFY110281	5.5	11.05	39.0	A	S03

(D1) Internal diameter, (D2) External diameter, (B) Shape, (C) Material

VALVE GUIDES

IVT Ref.	Type	Model	Engine	OEM Ref.	D1	D2	Length	B	C
VOLVO									
8129.104	IN-EX	V50 (MW), 2.0	B 4204 S3	LFY110281	5.5	11.05	39.0	A	S03
8129.104	IN-EX	V50 (MW), 2.0 FlexFuel	B 4204 S4	LFY110281	5.5	11.05	39.0	A	S03
8136.604	IN-EX	V50 (MW), 2.4 D5	D 5244 T8/D 5244 T13		6.0	11.55	39.6	F	S03
8160.604	IN-EX	V50 (MW), T5	B 5254 T3		6.0	11.99	45.0	F	S03
8160.604	IN-EX	V50 (MW), T5 AWD	B 5254 T3		6.0	11.99	45.0	F	S03
8054.701	IN-EX	V70 I (LV), 2.5 TDI	D 5252 T	056103419A	8.0	12.06	36.5	G	B
8054.701	IN-EX	V70 I (LV), 2.5 TDi AWD	D 5252 T	056103419A	8.0	12.06	36.5	G	B
8136.604	IN-EX	V70 II (SW), 2.4 D	D 5244 T2		6.0	11.55	39.6	F	S03
8136.604	IN-EX	V70 II (SW), 2.4 D5	D 5244 T/D 5244 T5		6.0	11.55	39.6	F	S03
8136.604	IN-EX	V70 II (SW), 2.4 D5	D 5244 T4		6.0	11.55	39.6	F	S03
8136.604	IN-EX	V70 II (SW), 2.4 D5 AWD	D 5244 T/D 5244 T5/D 5244		6.0	11.55	39.6	F	S03
8136.604	IN-EX	V70 II (SW), 2.4 D5 AWD	D 5244 T4		6.0	11.55	39.6	F	S03
8160.604	IN-EX	V70 II (SW), 2.4 T	B 5244 T3		6.0	11.99	45.0	F	S03
8160.604	IN-EX	V70 II (SW), 2.4 T AWD	B 5244 T3		6.0	11.99	45.0	F	S03
8160.604	IN-EX	V70 II (SW), 2.5 T	B 5254 T2		6.0	11.99	45.0	F	S03
8160.604	IN-EX	V70 II (SW), 2.5 T AWD	B 5254 T2		6.0	11.99	45.0	F	S03
8054.701	IN-EX	V70 II (SW), 2.5 TDI	D 5252 T	056103419A	8.0	12.06	36.5	G	B
8129.104	IN-EX	V70 III (BW), 2.0	B 4204 S3	LFY110281	5.5	11.05	39.0	A	S03
8136.604	IN-EX	V70 III (BW), 2.4 D	D 5244 T5		6.0	11.55	39.6	F	S03
8136.604	IN-EX	V70 III (BW), D5	D 5244 T4		6.0	11.55	39.6	F	S03
8136.604	IN-EX	XC70 CROSS COUNTRY, 2.4 D5	D 5244 T4		6.0	11.55	39.6	F	S03
8136.604	IN-EX	XC70 CROSS COUNTRY, 2.4 D5	D 5244 T		6.0	11.55	39.6	F	S03
8160.604	IN-EX	XC70 CROSS COUNTRY, 2.4 T X	B 5244 T3		6.0	11.99	45.0	F	S03
8160.604	IN-EX	XC70 CROSS COUNTRY, 2.5 T X	B 5254 T2		6.0	11.99	45.0	F	S03
8136.604	IN-EX	XC70 II, 2.4 D / D4 AWD	D 5244 T16/D 5244 T5/D 524		6.0	11.55	39.6	F	S03
8136.604	IN-EX	XC70 II, D5 AWD	D 5244 T4		6.0	11.55	39.6	F	S03
8160.604	IN-EX	XC90 I, 2.5 T	B 5254 T2		6.0	11.99	45.0	F	S03
8160.604	IN-EX	XC90 I, 2.5 T AWD	B 5254 T9		6.0	11.99	45.0	F	S03
8136.604	IN-EX	XC90 I, D3 / D5	D 5244 T5		6.0	11.55	39.6	F	S03
8136.604	IN-EX	XC90 I, D5 AWD	D 5244 T/D 5244 T5		6.0	11.55	39.6	F	S03
8136.604	IN-EX	XC90 I, D5 AWD	D 5244 T4		6.0	11.55	39.6	F	S03
8160.604	IN-EX	XC90 I, T6	B 6294 T		6.0	11.99	45.0	F	S03
WOLSE									
8124.100	IN-EX	HORNET, 1.0	99LFD	12G1111	7.1	11.94	43.0	A-1	G
ZASTAVA									
8146.600	IN-EX	101 (1100), 1.1	128 A.000		8.0	14.06	46.5	F	G
8146.600	IN-EX	YUGO FLORIDA, 1.4	160 A1.000		8.0	14.06	46.5	F	G
8146.600	IN-EX	YUGO FLORIDA, 1.4 KAT	160 A1.000		8.0	14.06	46.5	F	G

(D1) Internal diameter, (D2) External diameter, (B) Shape, (C) Material